DO NOT SCALE OR PLAN FROM THIS DRAWING

- Only figured dimensions to be used
- All measurements to be verified on site
- This drawing must NOT be reproduced or used without the wirrent authorisation of the author (Upnorth)

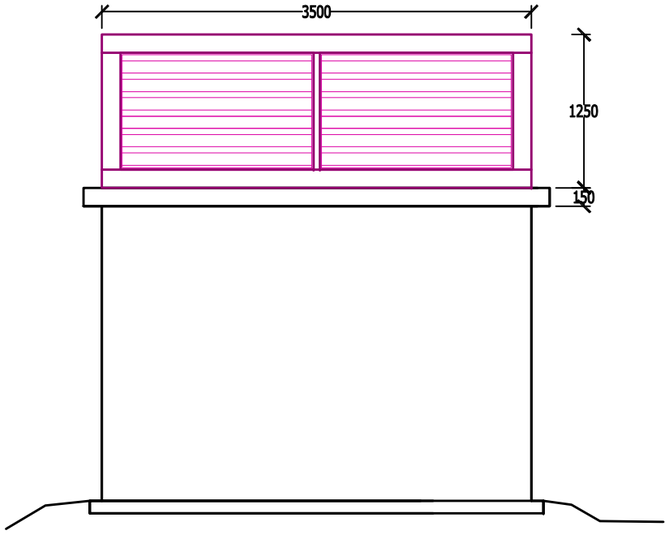

PROPOSED ELEVATION 2 & 4

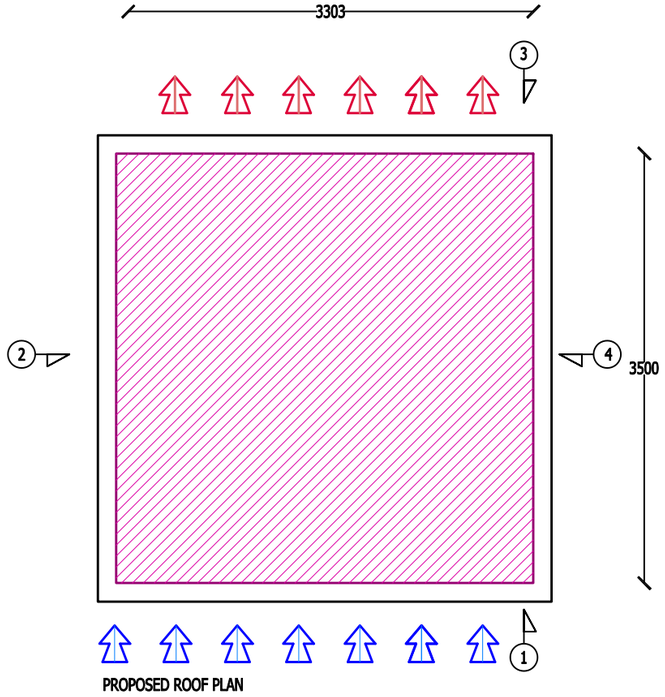

PROPOSED ROOF PLAN

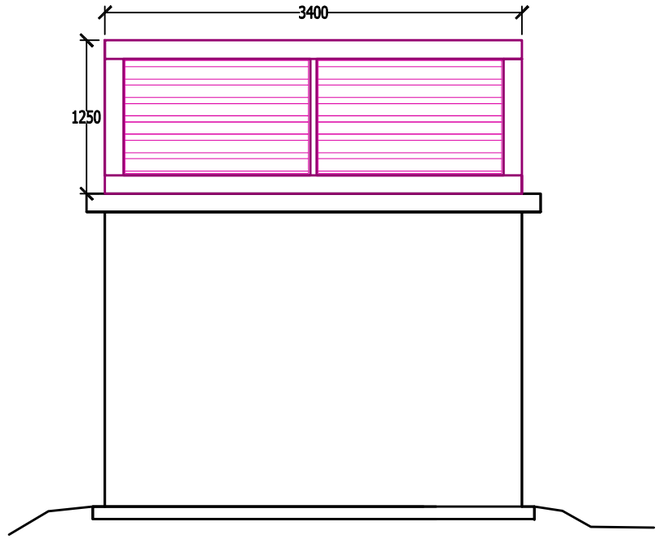

PROPOSED ELEVATION 3

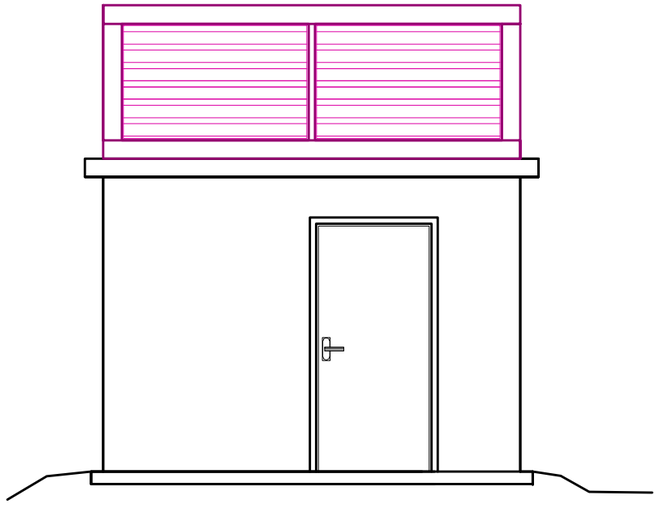

PROPOSED ELEVATION 1

PROTECTED BY COPYRIGHT LAW

UPNORTH ENVIRONMENT (Trading Division of)
UPNORTH ENGINEERING SERVICES LTD
UNIT 13, TOLL BRIDGE ROAD, BLAYDON TRADE PARK 2,
BLAYDON, NE21 5TR
Telephone 0191 414 2882 Facsimile 0191 414 1855
E-MAIL info@upnorthgroup.com

PROJECT
VIRGIN MEDIA
COMMUNITY HUB
EASTLEIGH T0890

TITLE
PROPOSED BUILDING & SERVICES

SCALE	SHEET	CONTRACT NR	DRG NR	REV	DATE
1:50	A3	411-1551-SG	M04	T2	08-10-11