THIS DRAWING IS NOT A SPECIFCATION OF WORK AND IS ONLY FOR THE PURPOSE OF GAINING TOWN PLANNING AND BUILDING REGULATION APPROVALS. ALL DETAILS/DIMENSIONS MUST BE CHECKED ON SITE BEFORE COMMENCEMENT OF WORK BY CONTRACTOR

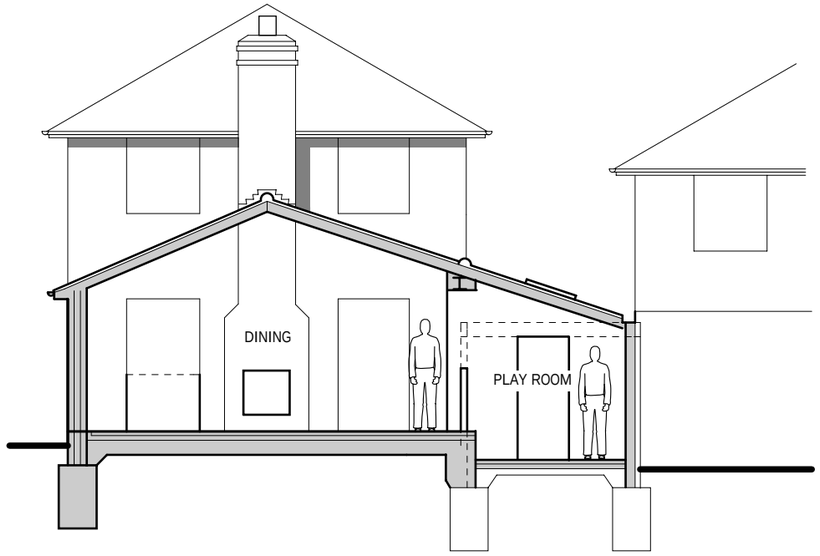

SECTION B-B

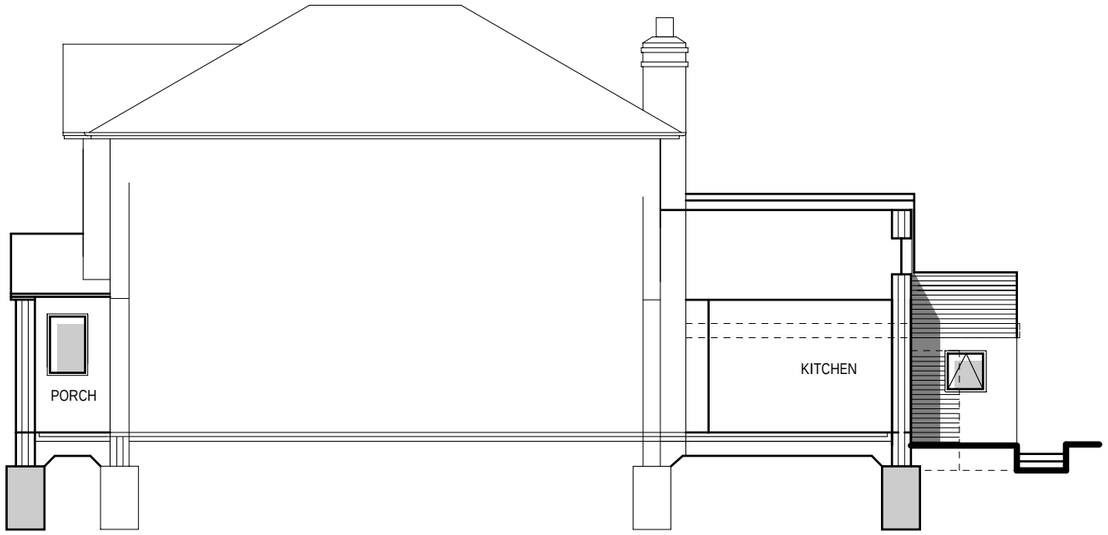

SECTION A-A

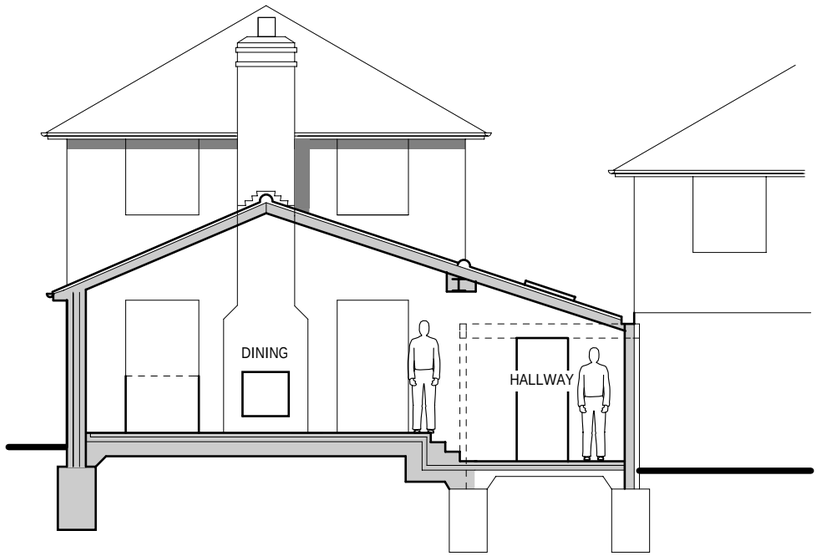

SECTION C-C

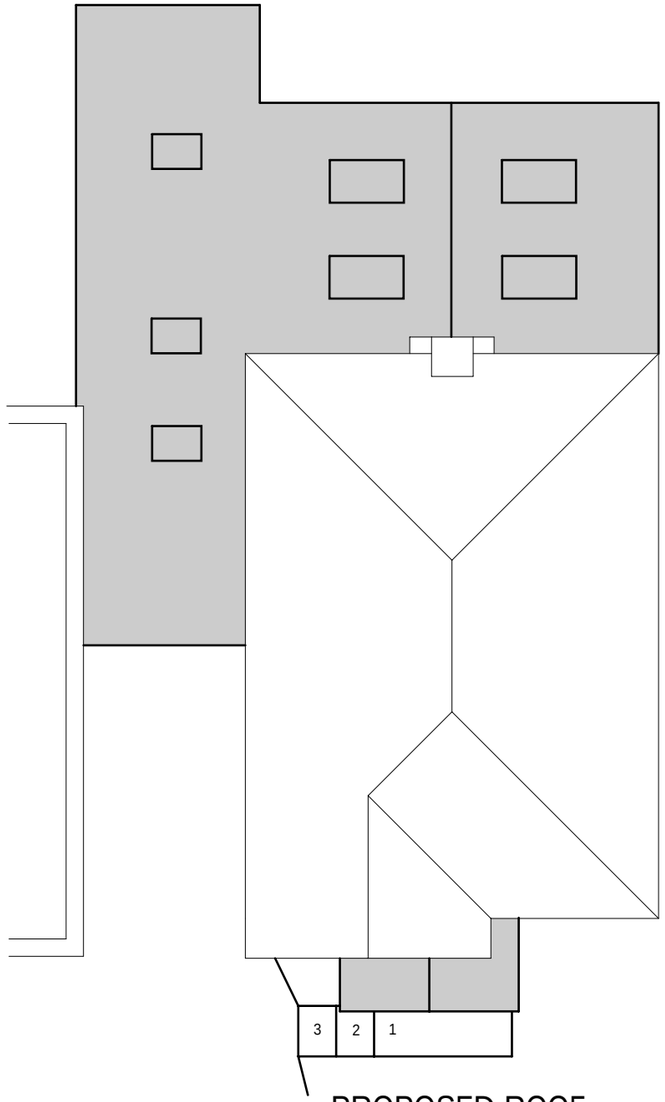

PROPOSED ROOF

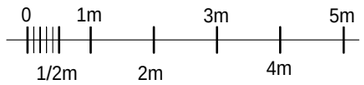

Scale 1 : 100

THIS DRAWING IS THE COPYRIGHT OF BOTH CREATIVE PARTNERSHIP AND MAY NOT BE COPIED ALTERED OR REPRODUCED IN ANY FORM OR PASSED TO A THIRD PARTY WITHOUT THE WRITTEN CONSENT OF BOTH CREATIVE PARTNERSHIP

PROPOSED SINGLE STOREY REAR EXTENSION PART GARAGE CONVERSION AND PORCH FOR 3 GATCOMBE GARDENS WEST END SO18 3NA

SCALE 1:50 A3

DRAWING No 020415 2A3