

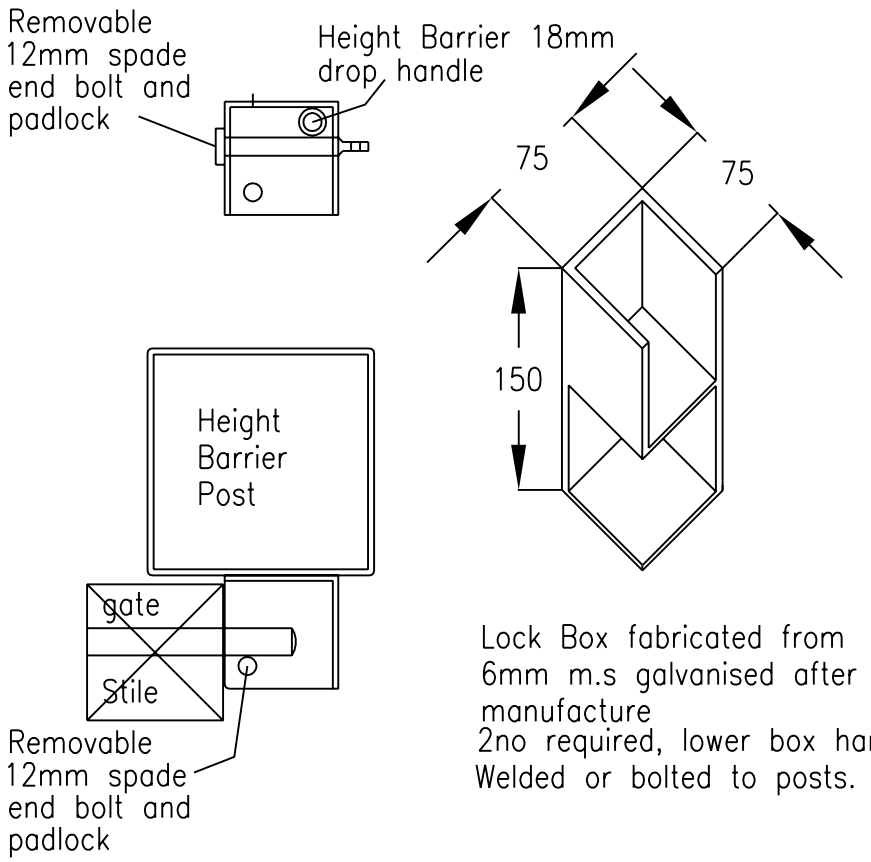

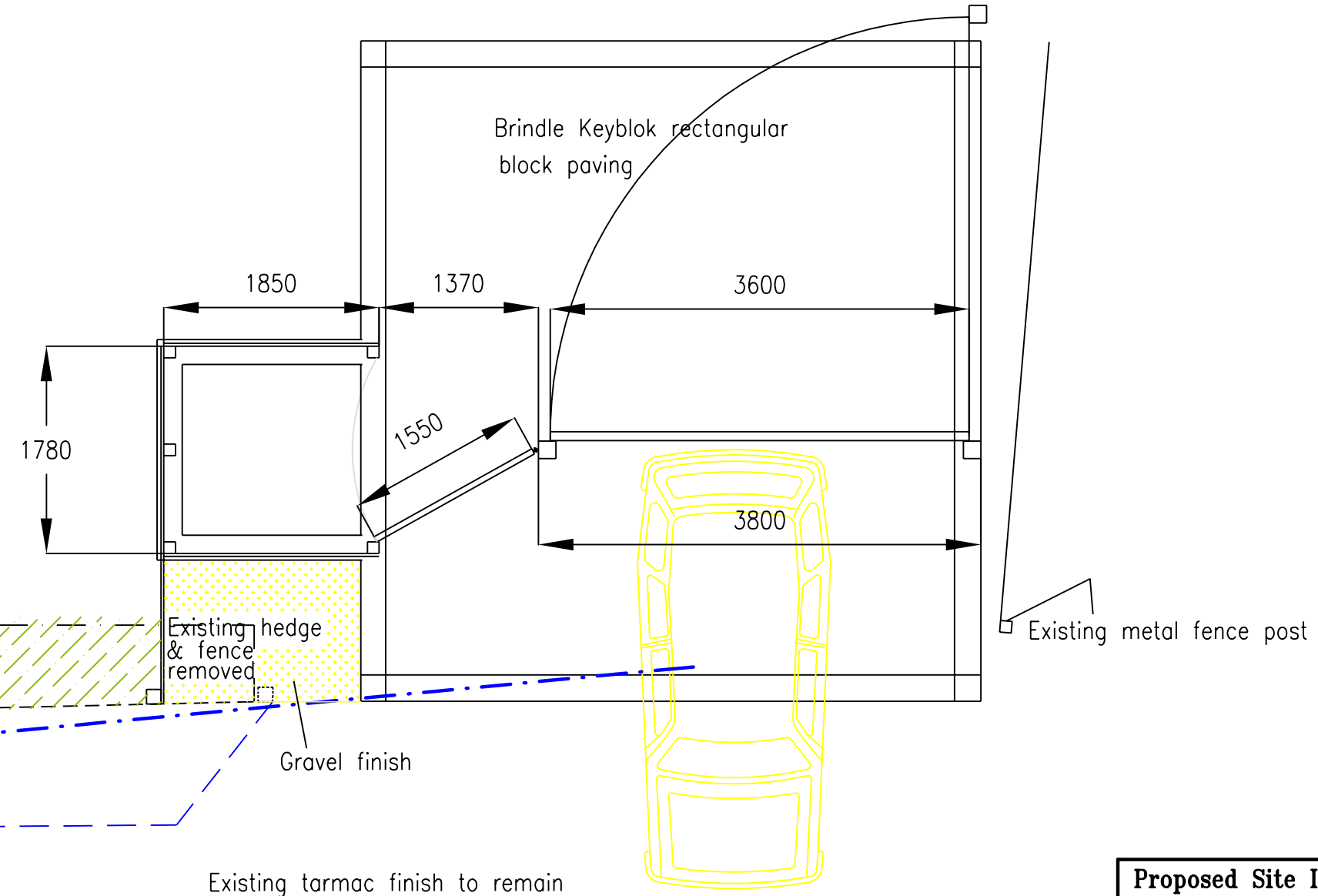

Proposed Site Improvements to HALL to
St. Edward the Confessor,
Grange Road, Netley Abbey.

GATE DETAILS

Date: May 2012
Drawing Number: 5A
Scale: 1:50 @ A3