3rd Angle

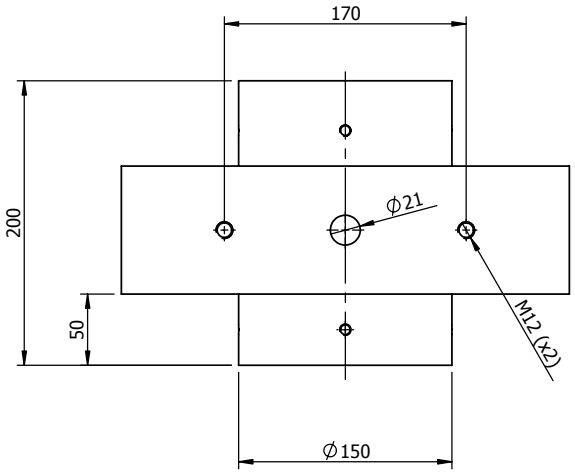


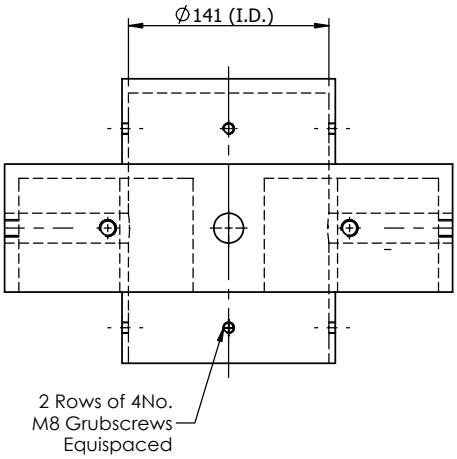


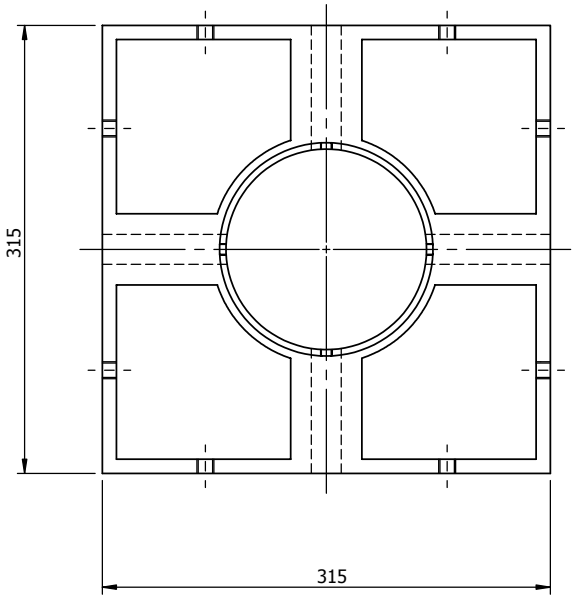


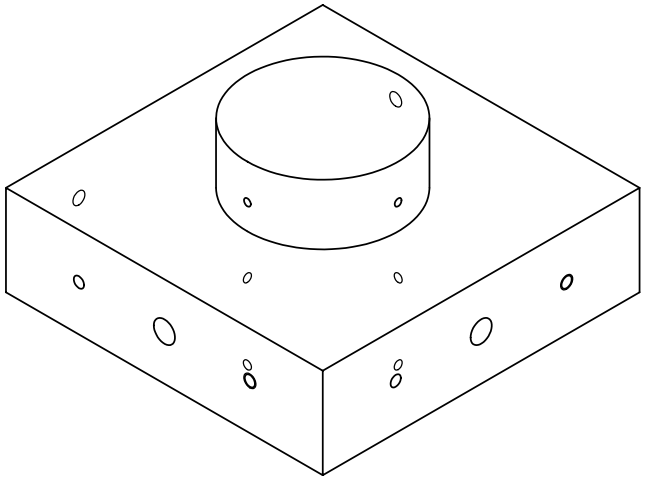

2011 © Copyright

PHILIPS

Philips lighting, Philips Centre,
Guildford Business Park
Guildford, Surrey. GU2 8XH

www.philips.com

Notes

All dimensions in millimetres unless stated otherwise.

When Multiple views are shown 3rd Angle Projection is assumed.

| Revisions | | |
|---|---|---|
| Rev. | Description | Date |

Title

Ø139.7 Cast Twin / Quad Optic Bracket to suit OptiFloods Including Top Cap for post top positions only.

Drg No. 26338-0

Scale:1:5

Sheet 1 of 2

Drawn By: sc | Chk'd: mhw

Ref. General Arrangement

Contract:

Customer: | Date: 13/09/2011