3rd Angle

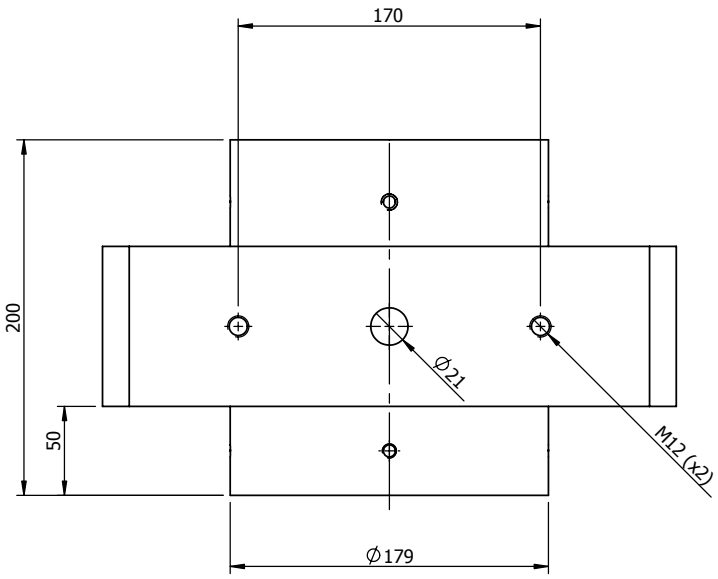

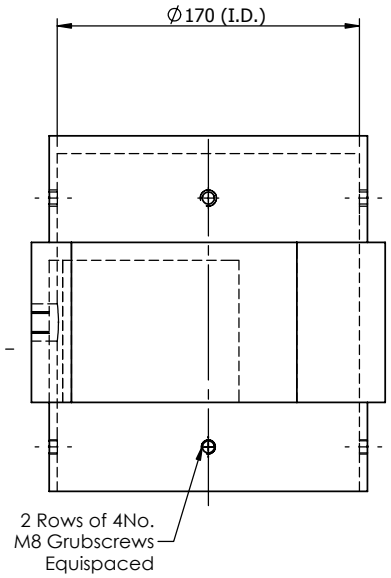

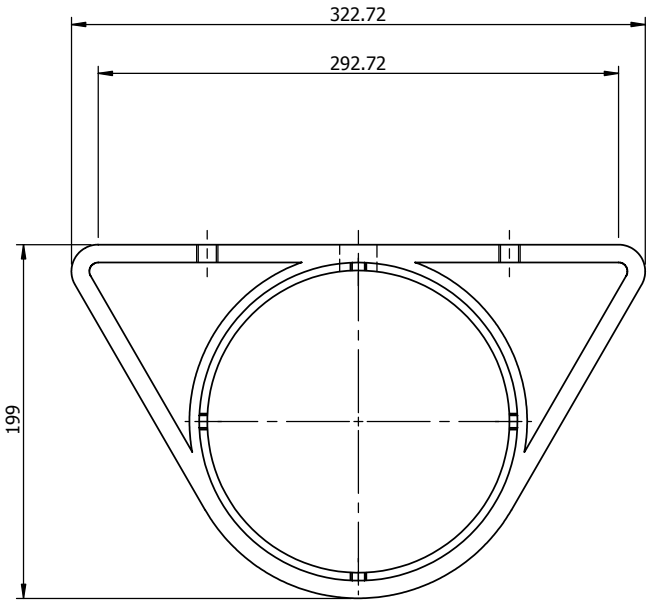

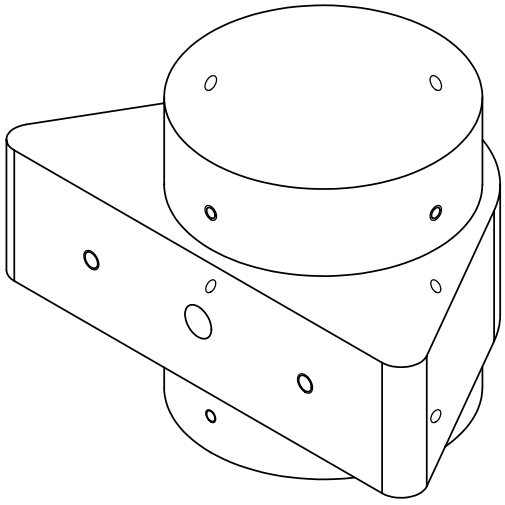

2011 © Copyright

PHILIPS

Philips lighting, Philips Centre,
Guildford Business Park
Guildford, Surrey. GU2 8XH

www.philips.com

Notes

All dimensions in millimetres unless stated otherwise.

When Multiple views are shown 3rd Angle Projection is assumed.

Revisions		
Rev.	Description	Date

Title

Ø168.3 Cast Single Optic Bracket to suit OptiFlood c/w Top Cap for Post Top Positions only

Drg No. 26341-0

N.T.S.

Sheet 1 of 2

Drawn By: sc | Chk'd: mhw

Ref. General Arrangement

Contract:

Customer: | Date: 13/09/2011