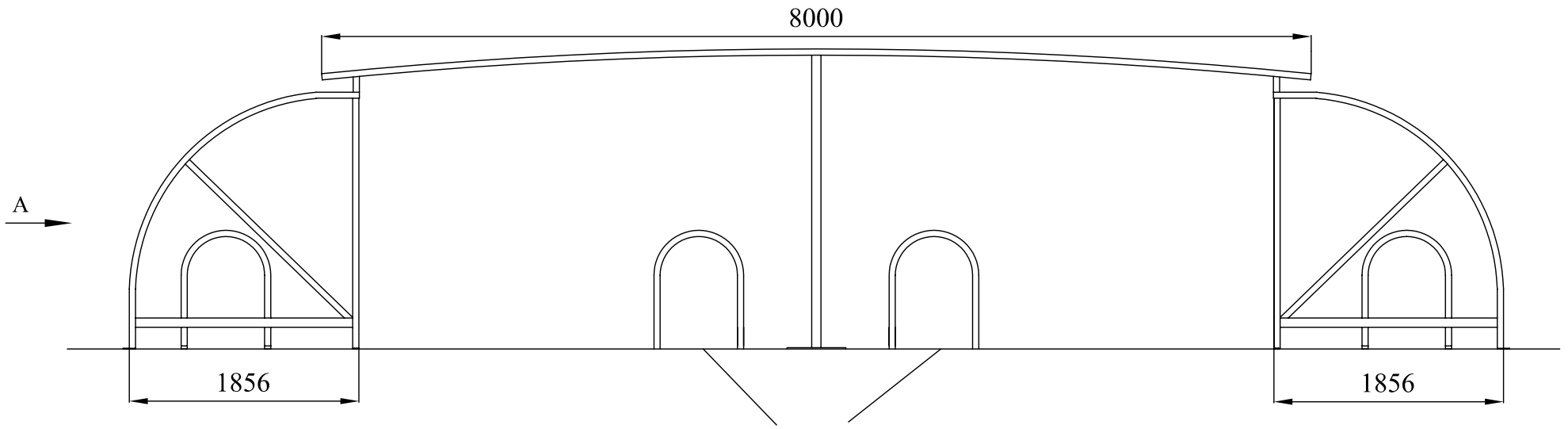

New Toast Racks

SIDE ELEVATION

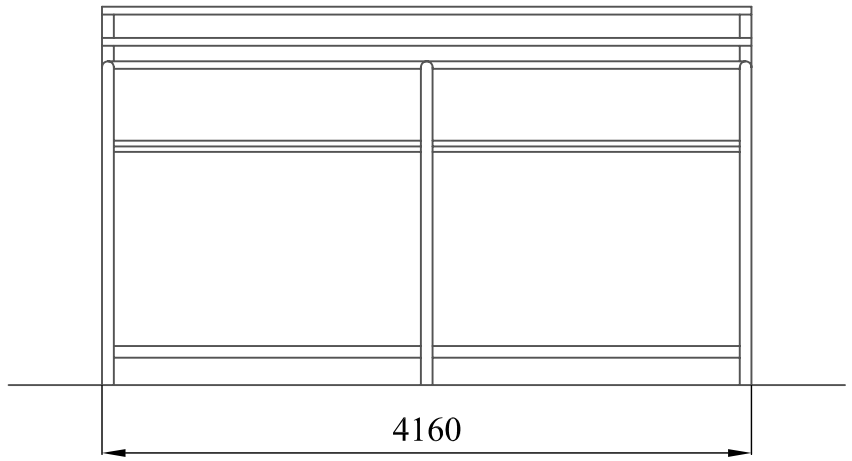

VIEW ON ARROW A

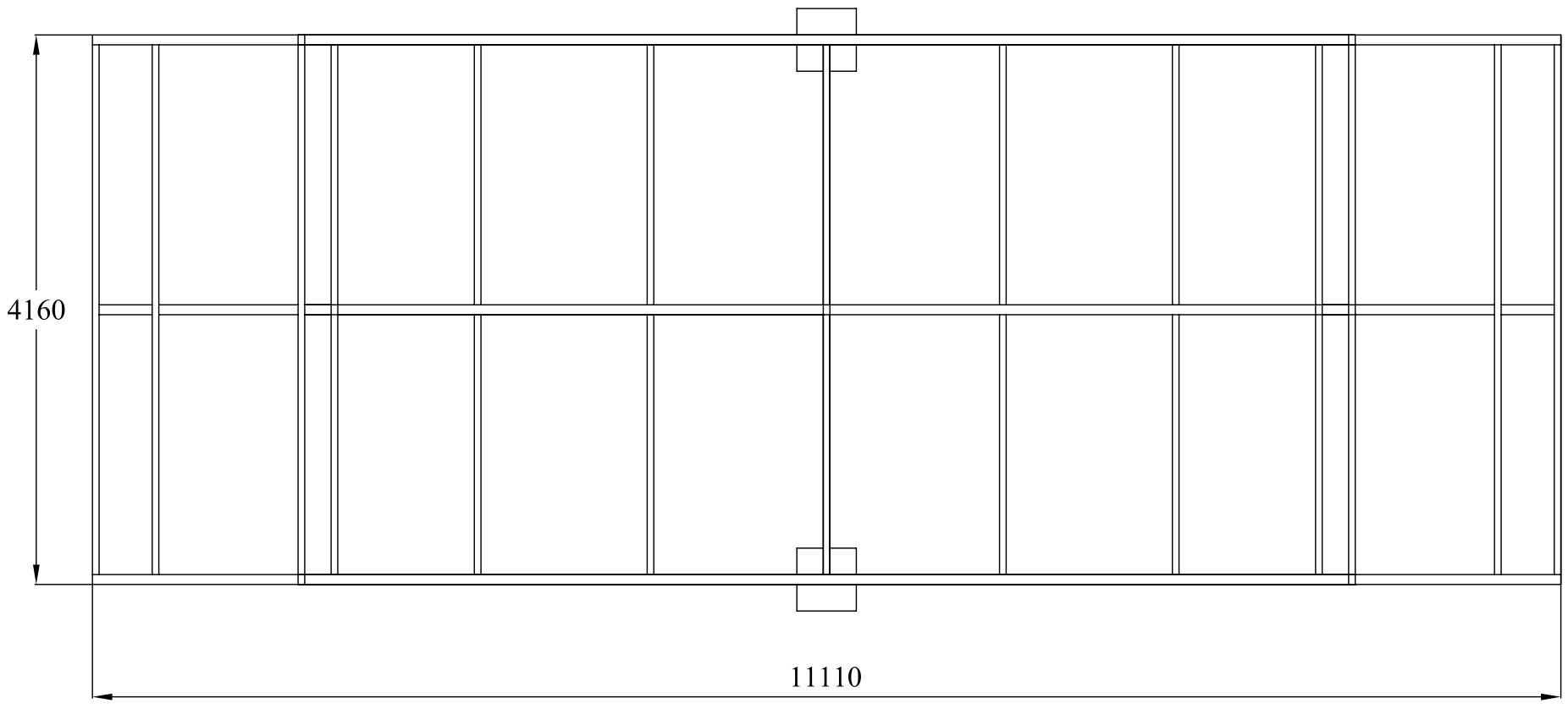

PLAN VIEW

Title. Eastleign					
Customer.		Scale .	1:50 @ A3	Cust Drg No.	
Drg No.		Material.		Approved By.	
Drg By.	Mark Jackson	Qty.		Date.	

Tolerances	
1mm-50mm ± 3	500mm-1000mm ± 2
50mm-120mm ± 5	1000mm-2500mm ± 3
120mm-500mm ± 1	2500-5000mm ± 5

Revision No.	

Aragorn