Notes:–

1. Drawing to be used for planning Purposes only.
2. All dimensions are to be checked on site prior to fabrication and/or construction. Any discrepencies are to be brought to the attention of MDA Architectural Services.

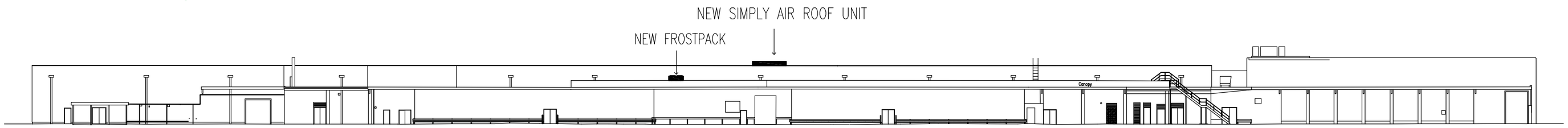

ELEVATION A
1:500

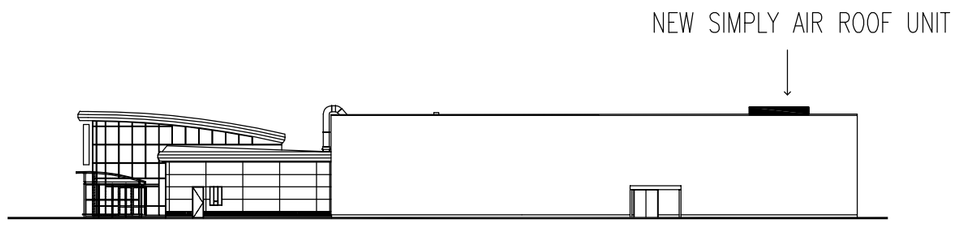

ELEVATION B
1:500

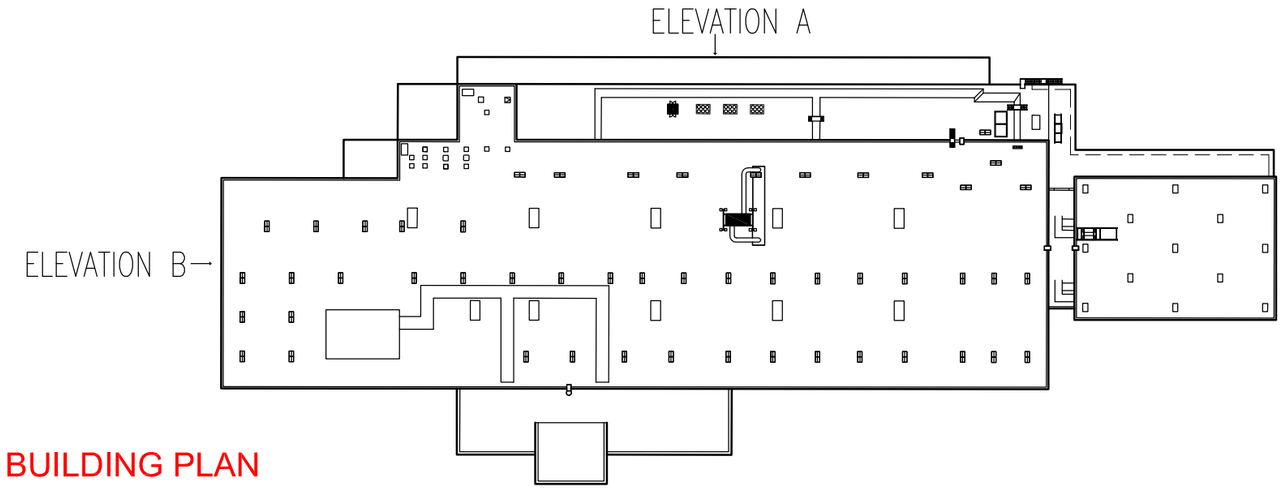

BUILDING PLAN
1:1250

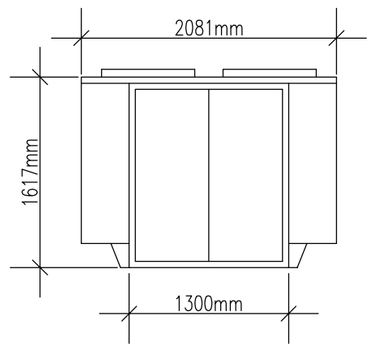

SIDE ELEVATION

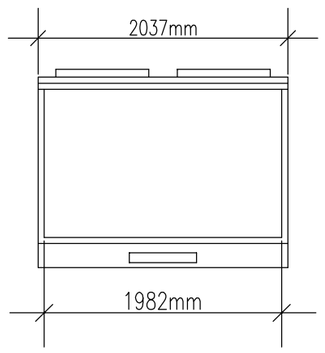

FRONT ELEVATION

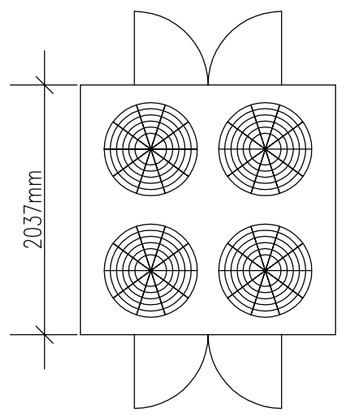

PLAN VIEW

FROSTPACK DETAILS
1:50

ALL PACKS REQUIRE 125A 3Ø SUPPLY
NOTE: FED FROM ESSENTIAL SIDE

WEIGHT = 1750KG / UNIT

OVERALL DB'A' = 52@ 10m
FREEFIELD CONDITIONS

MDA – ARCHITECTURAL SERVICES LTD

84 LONGWORTH ROAD HORWICH BL6 7BE
07587 080 007

PROPOSED ELEVATIONS

Asda Eastleigh
Bournemouth Road
Eastleigh
Hampshire
SO53 3YJ

Scale	As Shown @ A2	Drawing No.	Rev.
Date	02/03/12	0011-18/004	–
Dwg By	OH		

PLANNING