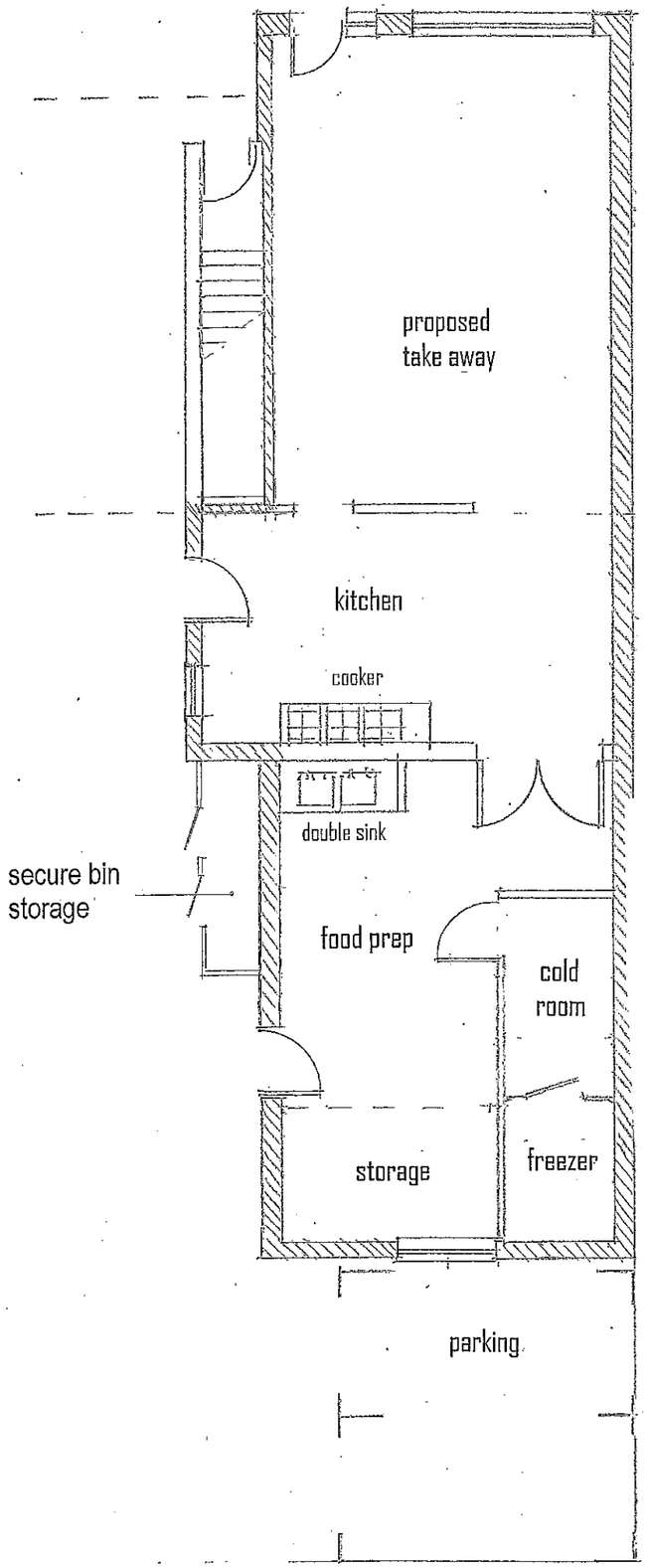

= 5M

SCALE 1 : 100 @ A3

Dimensions (mm)

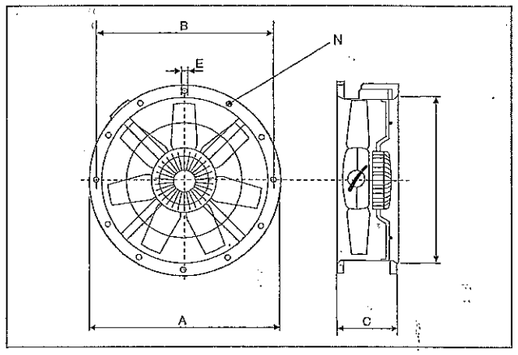

Model	Ø A	Ø B	C	Ø D	Ø E	Number of holes N
250	327	292	170	254	10	4
315	386	355	170	315	10	8
355	426	395	170	355	10	8
400	487	450	170	400	12	8
450	537	500	180	450	12	8
500	595	560	180	500	12	12
560	655	620	240	560	12	12
630	725	690	240	630	12	12
710 (6 and 8 poles)	806	770	240	710	12	16

Side elevation (west)

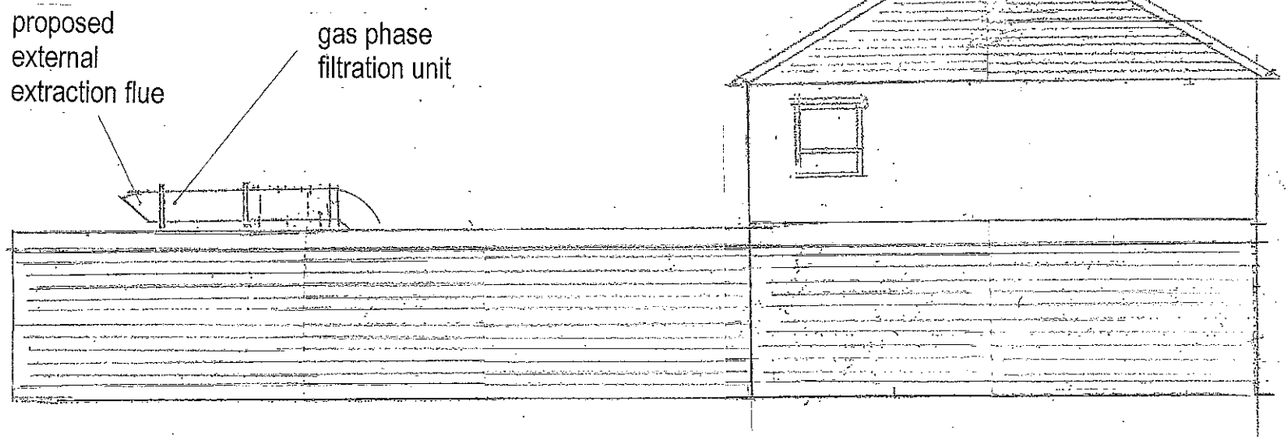

Rear elevation (north)

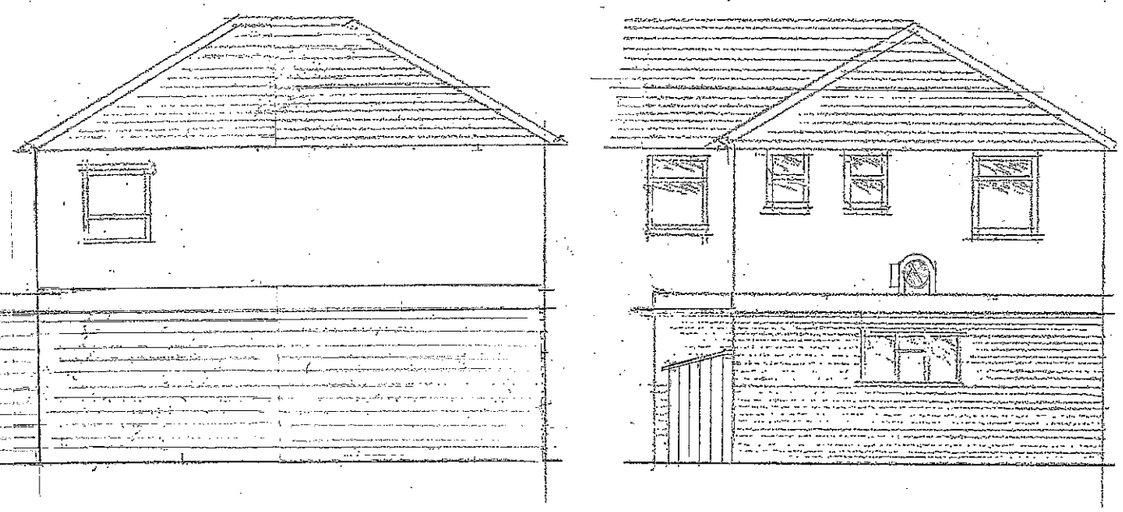

THE DISCARB CELL – GAS PHASE FILTRATION

Carbon filtration is ideal for removing unpleasant or even dangerous odours and gases from a wide variety of sources. The ever increasing awareness of this problem from public health authorites and environmentalists has resulted in an increase in the use of the unique properties of activated carbon filtration. Carbon will adsorb chemical molecules in the airstream in varying degrees according to the type of cantaminant and the period of time the air remains resident in the carbon.

Activated Carbon in its loose granular form can present problems as there is a tendency to for the granules to abrade one another. This causes both settlement of the carbon creating potential bypass voids and produces carbon dust that can be re-entrained into the air-stream. The unique bonding method eradicates these problems by producing a solid and stable biscuit of consistent quality and dimensional stability that produces an even resistance. Once formed the biscuits are bonded in 'V' formation into a rigid galvanised steel casing.

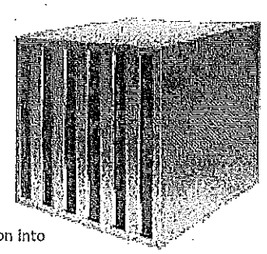

Operational Criteria

In order to ensure a carbon filter operates satisfactorily, certain criteria need to be met which do not apply to particulate filters. The most important aspect is the "dwell time" (the period of time the air is in contact with the carbon). The minimum dwell time used is 0.1 seconds and this is shown below as maximum permissable airflow. The dwell time may vary considerably according to the contaminant to be removed.

As far as possible water vapour should be erradicated from the air-stream to eliminate condensation within the filter that could cause porous blockage causing a dramatic increase in resistance. This also applies to loose carbon. However, humidity levels as high as 80% RH are normally acceptable providing no interstitial condensation takes place.

westbury filtermation

TITLE: Plan & elevation

CLIENT: Mrs Yau

PROJECT: 8 Botley Road, Hedge End, Change of use

DATE: 13/6/13

PLAN NO: E/400/AJW/002

Note: - Do not scale other than for Planning Application purposes. All dimensions must be checked by the contractor before commencing work on site.