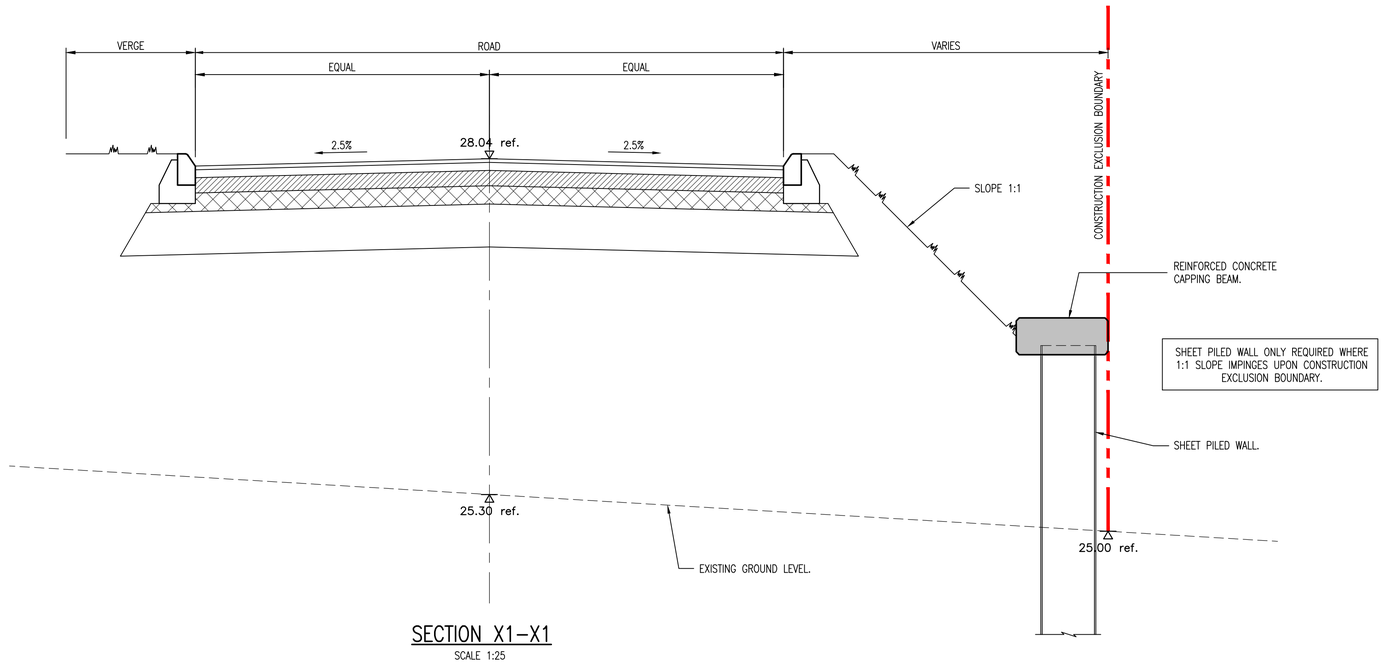

SECTION X1–X1

SCALE 1:25

NOTES:

1. THIS DRAWING IS COPYRIGHT AND SHOULD NOT BE REPRODUCED WITHOUT APPROVAL.

2. THIS DRAWING TO BE READ IN CONJUNCTION WITH THE ARCHITECTS DRAWINGS. ANY DISCREPANCIES ARE TO BE BROUGHT TO THE ATTENTION OF BOTH PARTIES IMMEDIATELY.

3. ANY DIMENSIONS/LEVELS INDICATED 'ref.' REFER TO ASSUMED/EXISTING DIMENSIONS WHICH ARE TO BE SITE CHECKED PRIOR TO THE COMMENCEMENT OF ANY WORK.

PRELIMINARY

Version	Amendment	Revised by and date	Checked by and date	Approved by and date
P1	PRELIMINARY	HDL/09.16	HDL/09.16	HDL/09.16

ORIGINAL DRAWING SIZE – A1

CAD REF. .

X-REFS: .

HAMILL DAVIES LIMITED
Consulting Civil and Structural Engineers

Client: FOREMAN HOMES LTD.

Project: THE 'JEZEPH' LAND, PROVIDENCE HILL

Drawing Title: SITE DETAILS – SHEET 1

Purpose: PRELIMINARY

Drawn: HDL

Designed:

Scale: AS SHOWN@A1

Issuing Office: SWANMORE

Telephone: 01489 893 596

Drawing Number: 15-2545-621

Version: P1