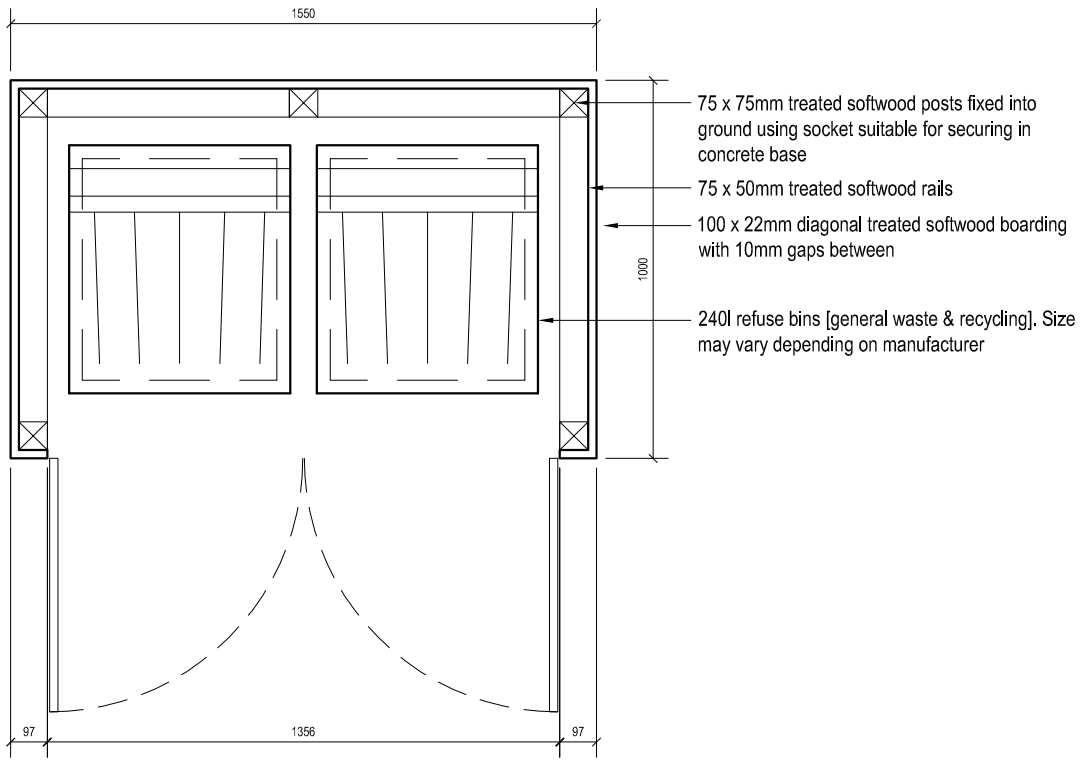

75 x 75mm treated softwood posts fixed into ground using socket suitable for securing in concrete base

75 x 50mm treated softwood rails

100 x 22mm diagonal treated softwood boarding with 10mm gaps between

240l refuse bins [general waste & recycling]. Size may vary depending on manufacturer

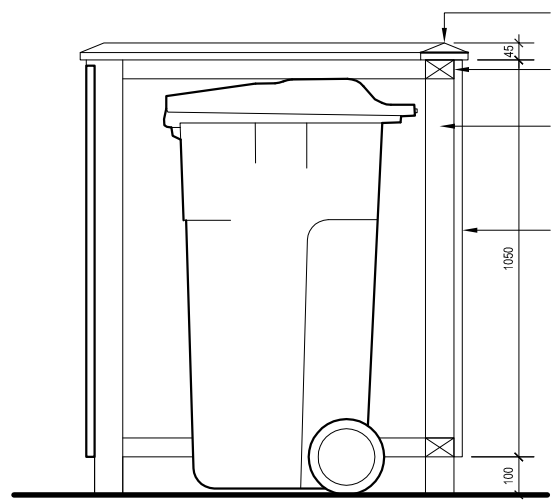

45 x 125mm twice weathered treated softwoood capping

75 x 50mm treated softwood rails

75 x 75mm treated softwood posts fixed into ground using socket suitable for securing in concrete base

100 x 22mm diagonal treated softwood boarding with 10mm gaps between

SPECIFICATION

- All timber to be treated softwood and finished with a wood stain eg Sadolin Fence Woodstain
- All ironmongery and post sockets to be black

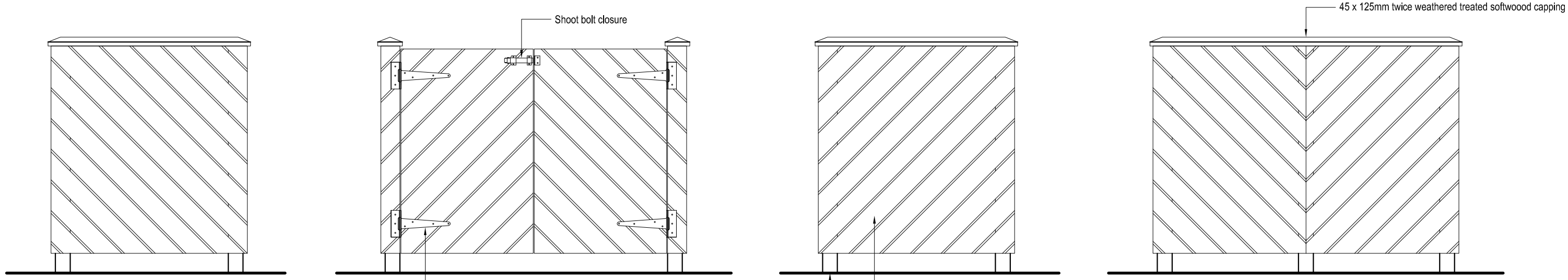

Kenn Scaddan Associates Ltd
architecture planning design project management

CONCEPT HOUSE, 35 KINGSTON CRESCENT, NORTH END
PORTSMOUTH, HAMPSHIRE. PO2 8AA www.ksaltd.co.uk
T - 023 9267 3618 F - 023 9267 9819 E - info@ksaltd.co.uk

PROJECT

Wykeham & Winchester Close

DRAWING TITLE

Refuse Store

Date	Drawn by	Scale		Drawing No.	Rev.
June 2011	DRK	1:20	A3	960-PD-114	-