

SOUTH EAST NORTH & WEST FACING ELEVATIONS

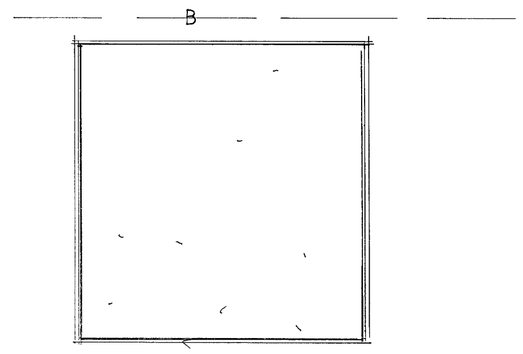

ROOF PLAN

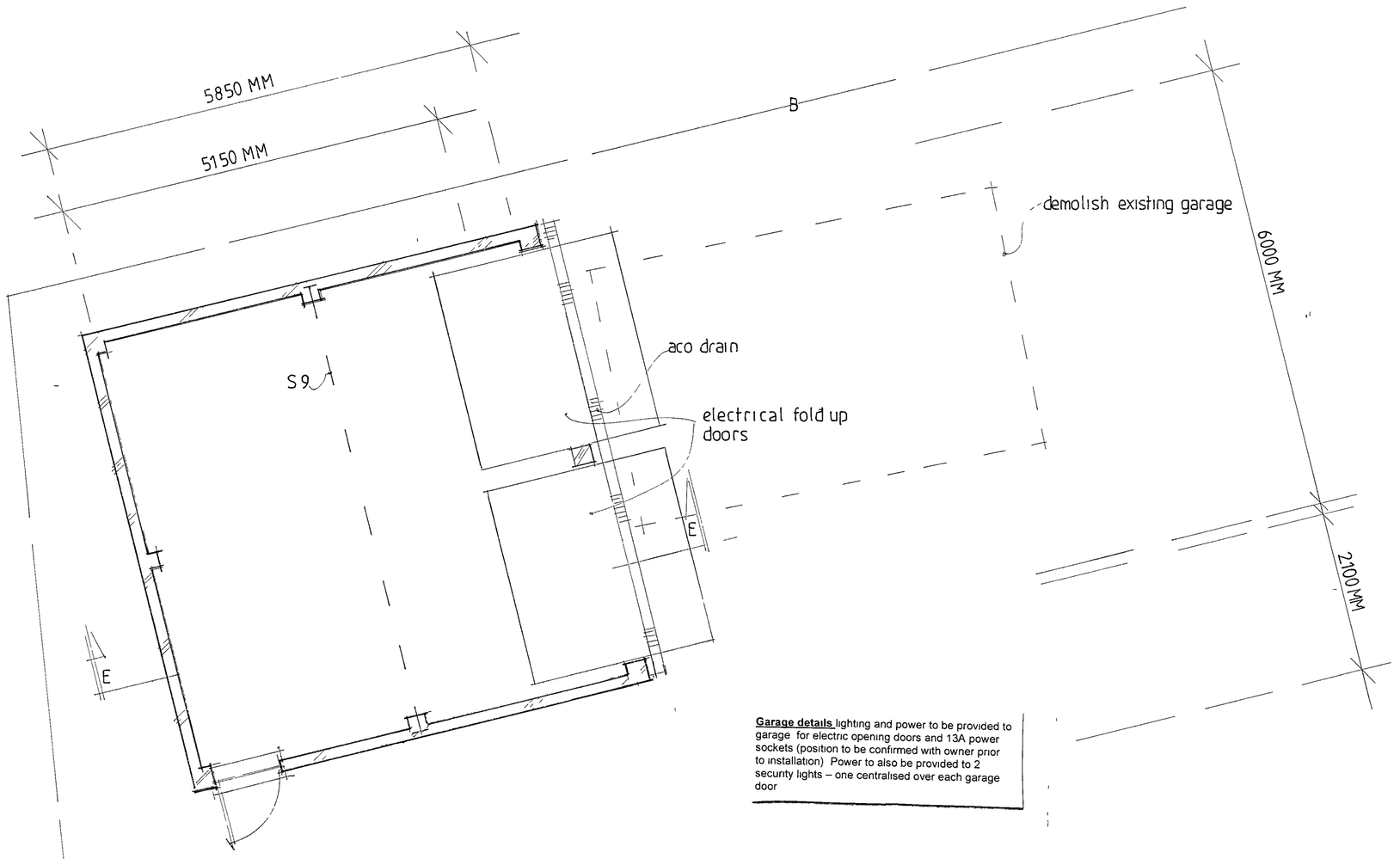

Garage details lighting and power to be provided to garage for electric opening doors and 13A power sockets (position to be confirmed with owner prior to installation) Power to also be provided to 2 security lights – one centralised over each garage door

GARAGE FLOOR PLAN

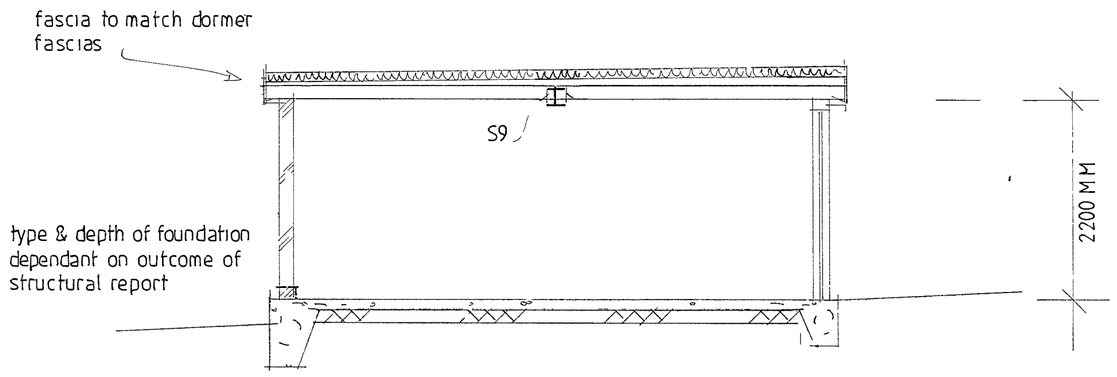

SECTION.EE.

C	DEC 2016	CLIENT AMENDS
B	DEC 2016	REVISED SCHEME
	Date	Revision

© copyright

THORNS YOUNG ARCHITECTURAL

THORNS-YOUNG LTD
CHARTERED BUILDING CONSULTANTS
Website www thornsyoung co uk

Fareham
21 Middle Road
Park Gate
SO31 7GH
Tel (01329) 888 322

Portsmouth
232 London Road
North End
PO2 9JQ
Tel (02392) 672 883

Client

MR & MRS J HALLIGAN

Job Title

JACARANDA
YORK ROAD
NETLEY

Drawing Title

GARAGE WORKS

Scale 1-50, 1-100 · at A1

Date OCT 2016 | Drawn by SA

Drg No PG 1091 16 4 | Rev C