ECOURBAN LIMITED
Radley House,
8 St Cross Road
WINCHESTER
SO23 9HX

T: 01962 877 397 **M:** 07532 373 563
E: barrie@eco-urban.co.uk
W: www.eco-urban.co.uk

Ms Child
Bargate Homes Ltd
The Estate Office
15 Vicarage Farm Business Park
Winchester Road
Fair Oak
SO50 7HD

Our Ref: **13445 - Let 2**

18 July 2013

Dear Ms Child

RE: TREE ISSUES AT THE BUILD CENTRE, KNOWLE HILL, EASTLEIGH

I write with regard to our recent discussion concerning the above site and your request to provide an updated tree protection plan in the context of an extant planning consent (Application No: O/11/70078) for the site.

You provided me with the following documents:

- A PDF version of an Arboricultural Survey by Pegasus Environmental (Reference: 'BRS.3050/Eastleigh Reports/PC/11')
- A CAD version of a land survey (References: '5N8-Knowle Hill')
- A CAD version of a layout (Reference: 'July12')
- The Decision Notice (Reference 1042654)

Please find attached my tree protection plan based on the provided drawings. For consistency, I have used the same tree numbering regime as that indicated in the Pegasus Arboricultural Survey. As per our discussions, I have shown trees T1 to G7 (low quality BS 5837 trees) to be removed and the TPO tree (T8) retained, with suitable tree protection.

The position of the tree protection is also shown on ECO 2 and I have also attached specifications for tree protection barriers and ground protection to be used around the tree. I trust that the attached is sufficient

for your needs and suitable to allow the council to discharge the tree related planning condition attached to the consent.

Please call me if you need further clarification on any of these points.

Yours sincerely



Barrie Draper **BSc(Hons)Arb TechCert(ArborA) CertArb(RFS)**
Arboricultural Consultant

Enclosed: 1: Illustrative tree protection specifications
2: Revised Tree Protection Plan

TREE PROTECTION BARRIERS





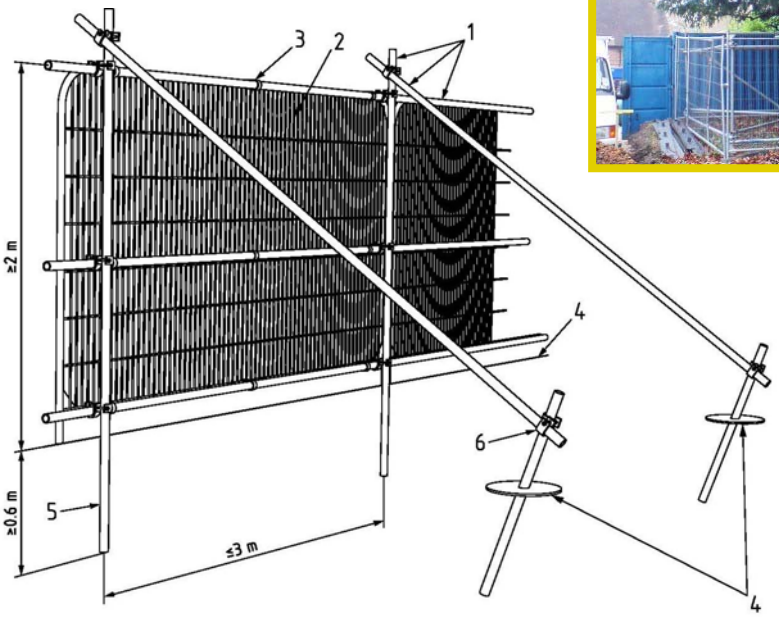

Key

1 Standard scaffold poles
2 Heavy gauge 2 m tall galvanized tube and welded mesh infill panels
3 Panels secured to uprights and cross-members with wire ties
4 Ground level
5 Uprights driven into the ground until secure (minimum depth 0.6 m)
6 Standard scaffold clamps

Illustration taken from British Standard 5837 (2012): Trees in relation to design, demolition and construction – Recommendations.

The default specification should consist of a vertical and horizontal scaffold framework, well braced to resist impacts. The vertical tubes should be spaced at a maximum interval of 3 m and driven securely into the ground. Onto this framework, welded mesh panels should be securely fixed.

– BS 5837 (2012)

Ref: Tree Protection Barriers (Type 1)	Drawing No. TPB1
Scale: N/A	

GROUND PROTECTION



Photograph 1



Photograph 2 (courtesy www.groundtrax.com)

New temporary ground protection should be capable of supporting any traffic entering or using the site without being distorted or causing compaction of underlying soil.

NOTE The ground protection might comprise one of the following:

a) for pedestrian movements only, a single thickness of scaffold boards placed either on top of a driven scaffold frame (Photograph 1), *so as to form a suspended walkway, or on top of a compression-resistant layer (e.g. 100 mm depth of woodchip), laid onto a geotextile membrane;*

b) for pedestrian-operated plant up to a gross weight of 2 t, proprietary, inter-linked ground protection boards (Photograph 2), *placed on top of a compression-resistant layer (e.g. 150 mm depth of woodchip), laid onto a geotextile membrane;*

c) for wheeled or tracked construction traffic exceeding 2 t gross weight, an alternative system (e.g. proprietary systems or pre-cast reinforced concrete slabs) to an engineering specification designed in conjunction with arboricultural advice, to accommodate the likely loading to which it will be subjected.

– BS 5837 (2012)

Ref: Ground Protection	**Drawing No. GP1**
Scale: N/A	



ecourban Limited	ECO 2 - REVISED TREE PROTECTION FOR THE BUILD CENTRE, KNOWLE HILL, EASTLEIGH	SCALE: 1:200 @ A1	COMPOSITE PLAN: LAND SURVEY OUTLINED IN GREY, CONSENTED DEVELOPMENT SHOWN IN BLUE

T1 xxx **BS Category B:** Trees of moderate quality

T1 xxx **BS Category C:** Trees of low quality

Tree protective barriers with construction excluson zone

Area outside barriers requiring ground protection

Trees to be removed

This drawing was originally produced in colour, therefore any subsequent monochrome photocopies may not show appropriate levels of detail and should not be relied upon for the purposes of dealing with site tree issues