NatWest

HEDGE END

3 LOWER NORTHAM ROAD, SO30 4PAE

© Pearce Signs

Castle Court · Duke Street · New Basford · Nottingham, NG7 7JN · Tel: +44 (0)115 940 9620 · Fax: +44 (0)115 940 9621 · signs@pearcesigns.com · www.pearcesigns.com

External Branding Concept Proposal

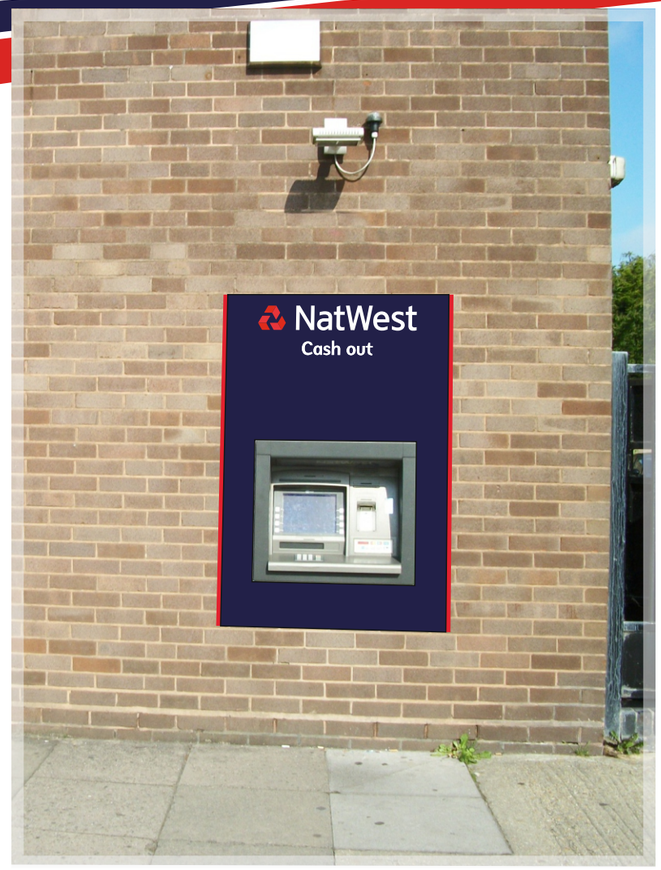

PROPOSED

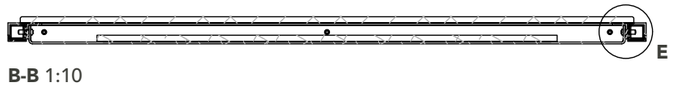

B-B 1:10

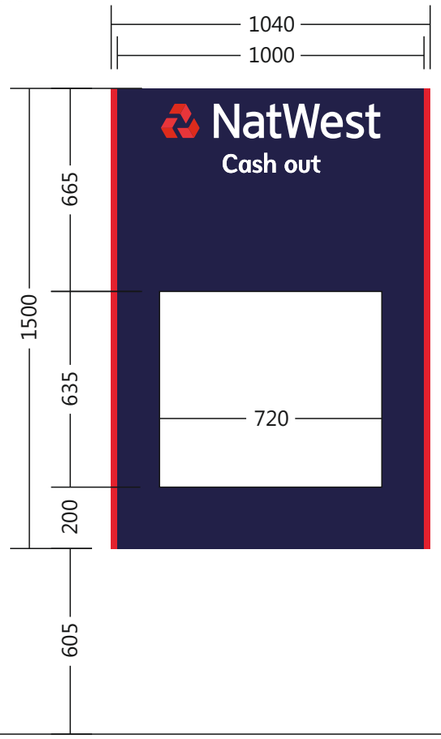

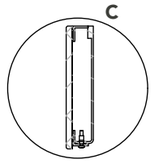

A-A 1:10

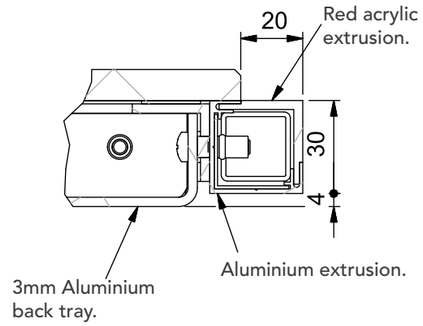

E 1:2

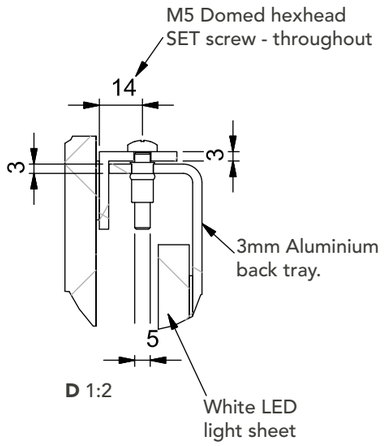

D 1:2

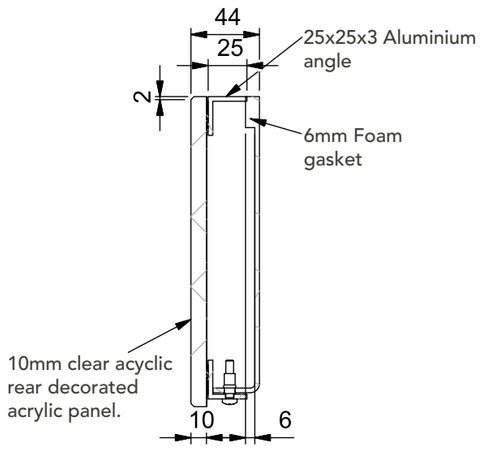

C 1:4

1 **ATM Surround** 1:20
To be 10mm clear acrylic with bevelled and polished edges. Panel reverse decorated with opaque Blueberry and Red chevron & White text to illuminate using White LEDs. Red acrylic accent lines to illuminate with Red LEDs.

Qty 1

Notes & Requirements
· Option 2
· Re-Locate Slip Bin
· Remove Roundal
· Electrical Supply from Roundal

Designer S O'Brien **Date Drawn** 22.09.12

Checked _

Revision Issue _ · Designer_ · __.__.12
(_) Note_

CMYK 82 74 0 70
CMYK 5 100 92 0
CMYK 88 75 0 0
CMYK 0 0 0 0

Font Name_

Please NOTE
This proposal may contain conceptual ideas and inaccurate artwork, fonts, colours and sizes used for illustrative purposes only.





EXISTING

0 50 200 400 600 800
Scale 1:20

© Pearce Signs

The contents of this drawing **must not** be copied, reproduced or used in any way without express written permission · Dimensions shown in millimetres unless stated otherwise · Scale @ A3