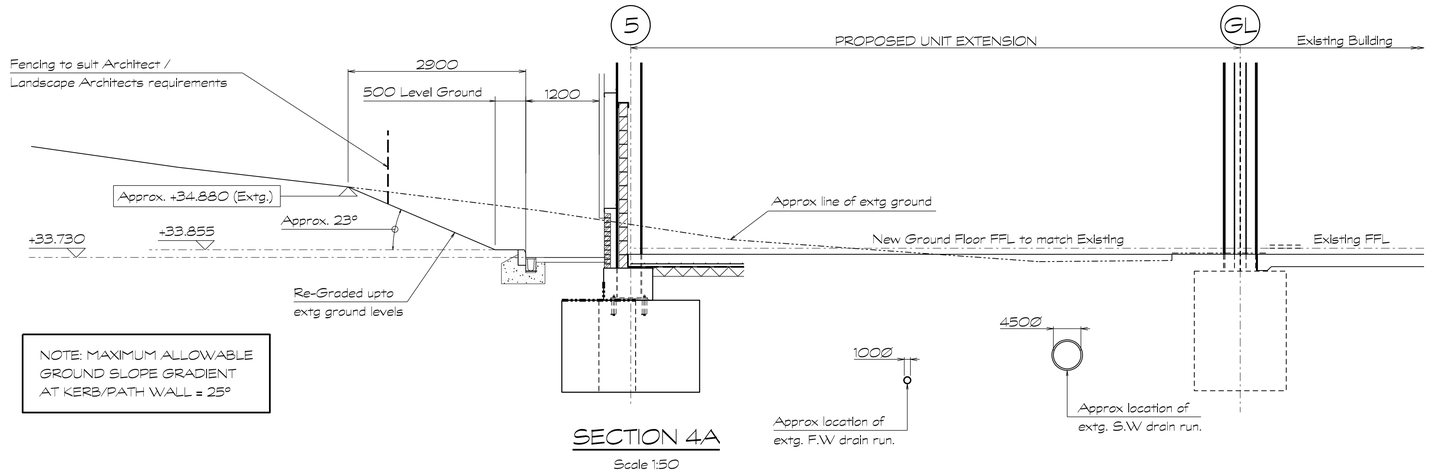

NOTE: MAXIMUM ALLOWABLE GROUND SLOPE GRADIENT AT KERB/PATH WALL = 25°

SECTION 4A

Scale 1:50

NOTE: ALL SETTING-OUT & DIMENSIONS INDICATED BY THE ENGINEER & ARCHITECTS IS FOR INFORMATION ONLY. IT IS THE MAIN CONTRACTORS RESPONSIBILITY TO COORDINATE AND CONFIRM SETTING-OUT REQUIREMENTS ON SITE.

NOTE: ALL LEVELS INDICATED ARE APPROXIMATE AND IT IS THE CONTRACTORS RESPONSIBILITY TO COORDINATE ON SITE STRICTLY ADHERING TO THE INDICATED MAXIMUM SLOPE REQUIREMENTS (MAXIMUM 20° BEHIND THE RETAINING WALL & MAXIMUM 25° ELSEWHERE) IT IS IMPERATIVE THAT THE SLOPE REQUIREMENTS ARE NOT EXCEEDED

FOR LOCATION OF SECTIONS REFER TO AWA DRG: 7988_RW_001 RETAINING WALL PLAN

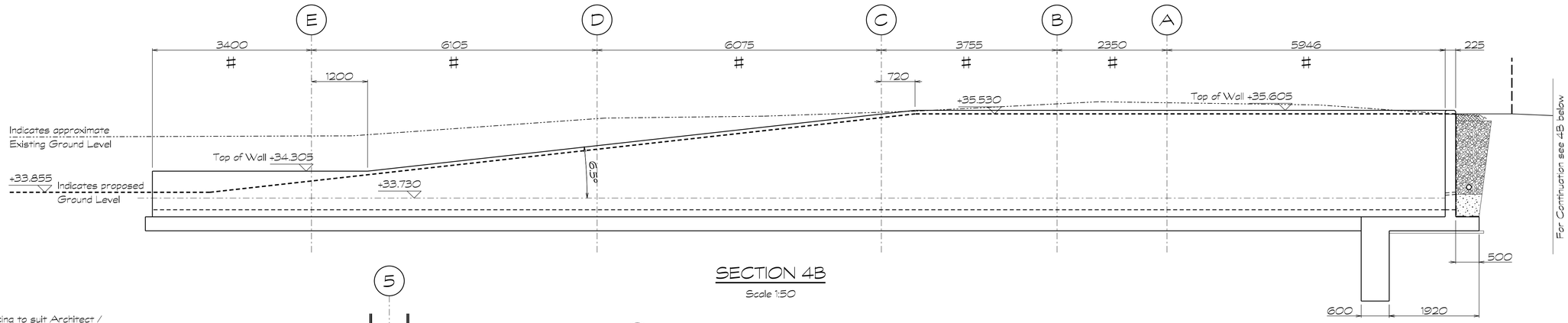

SECTION 4B

Scale 1:50

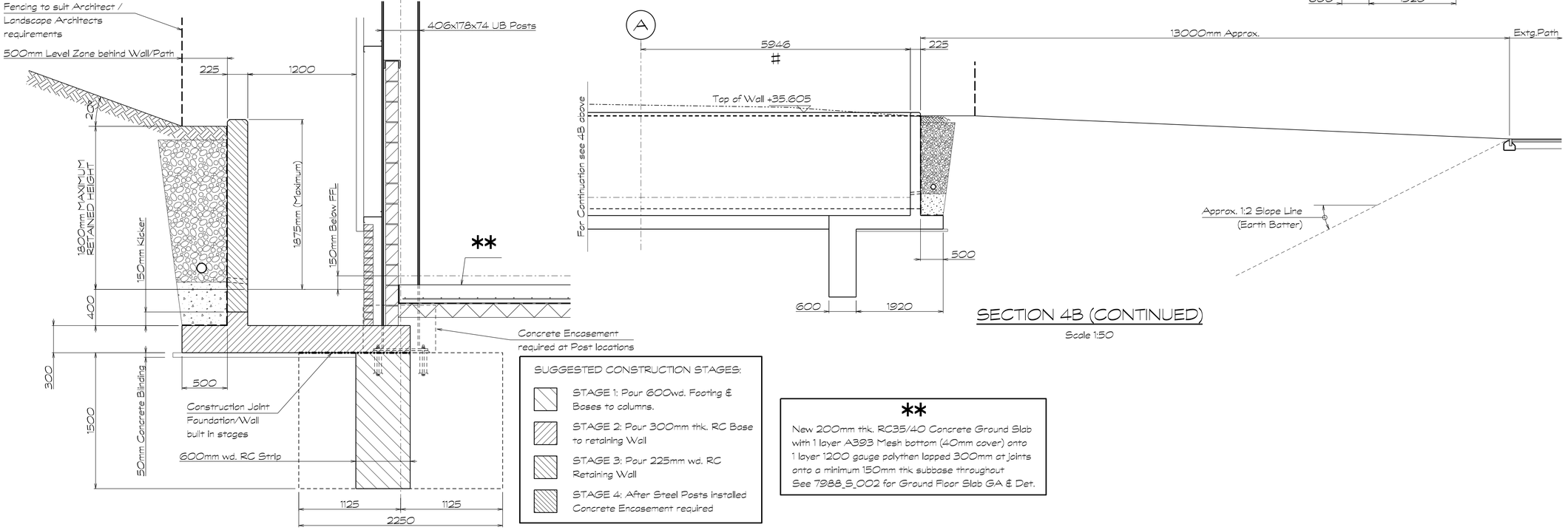

SUGGESTED CONSTRUCTION STAGES:

- STAGE 1: Pour 600wd. Footing & Bases to columns.
- STAGE 2: Pour 300mm thk. RC Base to retaining Wall
- STAGE 3: Pour 225mm wd. RC Retaining Wall
- STAGE 4: After Steel Posts installed Concrete Encasement required

**

New 200mm thk. RC35/40 Concrete Ground Slab with 1 layer A393 Mesh bottom (40mm cover) onto 1 layer 1200 gauge polythen lapped 300mm at joints onto a minimum 150mm thk subbase throughout See 7988_S_002 for Ground Floor Slab GA & Det.

TYPICAL EDGE SECTION PRINCIPLES (SECTION/DETAIL 4C)

Scale 1:25 @ A1

SECTION 4B (CONTINUED)

Scale 1:50

0 1 2 3 4

scale bar (metres) 1:50

This drawing is the copyright of Andrew Waring Associates It may not be copied, altered or reproduced in any way without their written authority.

Dimensions must be checked on site and not scaled from this drawing.

GENERAL NOTES

1. This drawing is to be read in conjunction with all relevant Architects, Engineers, Specialist Sub-Contractors drawings and the specification.

2. All setting out to be in accordance with the Architects drawings and any discrepancies between the Engineers and Architects drawings to be referred to the Architect before proceeding. Dimensions MUST NOT be scaled.

3. All work is to comply with current requirements of the Building Regulations & allied legislation whether referred to or not.

4. All materials should be used in compliance with the appropriate manufacturers recommendations.

5. The Contractor & Sub-Contractors must ensure that they have the latest issued drawings and details before commencing the relevant work.

6. Main Contractor to provide and fit suitable bracing and propping for all elements in the temporary condition during the construction stage, such as to ensure structural stability at all times.

Rev.	Date	Revisions	Chk.
T3	01.06.16	Issued for Tender	AL
		Section 4B increased to show	
		extg.path & add. Info added	
T2	31.05.16	Issued for Tender	AL
		Rear Toe of wall increased	
		to 500mm - typical.	
T1	19.05.16	Issued for Tender	AL

© copyright

ANDREW WARING ASSOCIATES
Consulting Civil and Structural Engineers
The Old Brewery House, Portersbridge Street, Romsey, Hants. SO51 8DJ
Tel: (01794) 524447 Fax: (01794) 515353
e-mail: mail@awaromsey.co.uk
website: www.awaromsey.co.uk

Architect:

MountfordPigott Architecture Masterplanning Design

Client:

SMITH BRADBEER & CO.

Job Title:

BRADBEERS RETAIL PARK

Drawing Title

RETAINING WALL SECTIONS SHEET 3

TENDER

Scale: 1:50, 1:25 @ A1

Date: April 16 | Drawn by: SH | Checked: AL

Drg. No. 7988_RW_004 | Rev. T3