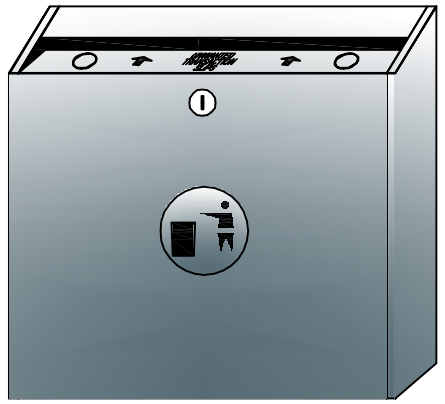

VIEW A

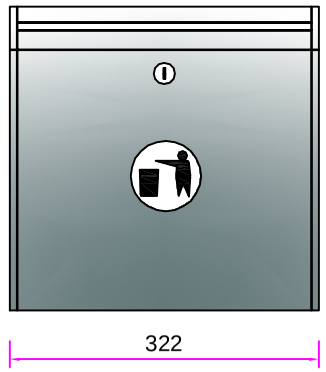

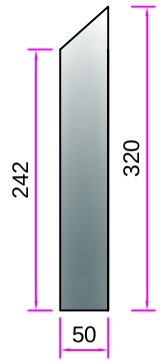

VIEW B

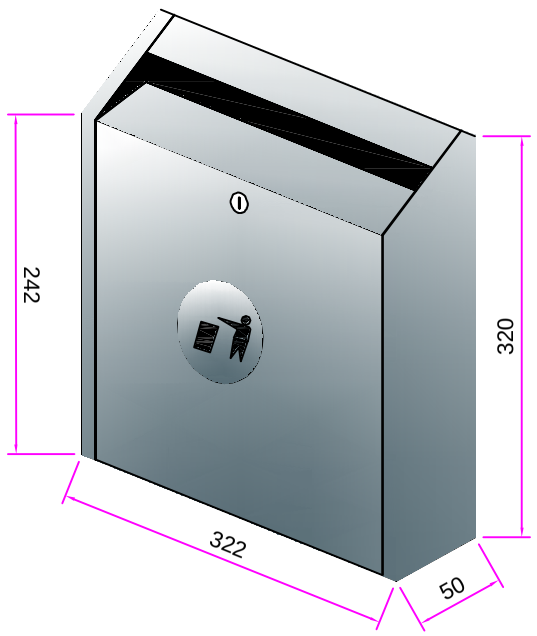

VIEW C



SITE ADDRESS

TITLE

RECEIPT/LITTER BIN

DRAWN	DATE	SCALE
BM	24-08-09	N.T.S
REF/DRG NO.	**SHEET**	**REVISION**
CTS0187	01	00

CompleteTechnicalServices Ltd.

ATMInstallation & ProjectManagement

www.complete-tech.co.uk
01709 821757