Philips OptiFlood BVP506

Mounting instructions

Instuctions de montage
Montageanleitung
Montage Instruktie
Istruzioni di montaggio
Instrucciones de montaje
Instrucces de montagem
Monteringsinstruktioner
Monteringsvejleching
Kokoonpano- ja Kiinnitysohjeet
Montaj yonergesi
ΟδθηεΧ τφξασνομηθτθΧ
Instrukcja montazu
Szerelesi utasitasok
Navod k montazi
bycnherwoz gi vjynf:e
Navod k montazi


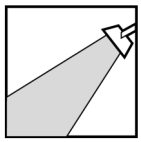





	COL OUR	LU-MEN	W	min						m²	IK..	IP..	kg
GRN68	740	6832	65	-30°C	30°C	40°C	6-10m	●	●	0.1	09	66	19.5
GRN78	740	7808	75	-30°C	30°C	40°C	6-10m	●	●	0.1	09	66	19.5
GRN88	740	8784	84	-30°C	30°C	40°C	6-10m	●	●	0.1	09	66	19.5
GRN98	740	9760	93	-30°C	30°C	40°C	6-10m	●	●	0.1	09	66	19.5
GRN107	740	10736	102	-30°C	30°C	40°C	6-10m	●	●	0.1	09	66	21
GRN117	740	11712	111	-30°C	30°C	40°C	6-10m	●	●	0.1	09	66	21
GRN73	657	7280	65	-30°C	30°C	40°C	6-10m	●	●	0.1	09	66	19.5
GRN83	657	8320	75	-30°C	30°C	40°C	6-10m	●	●	0.1	09	66	19.5
GRN94	657	9360	84	-30°C	30°C	40°C	6-10m	●	●	0.1	09	66	19.5
GRN104	657	10400	93	-30°C	30°C	40°C	6-10m	●	●	0.1	09	66	19.5
GRN114	657	11440	102	-30°C	30°C	40°C	6-10m	●	●	0.1	09	66	21
GRN125	657	12480	111	-30°C	30°C	40°C	6-10m	●	●	0.1	09	66	21
GRN56	830	5600	65	-30°C	30°C	40°C	6-10m	●	●	0.1	09	66	19.5
GRN64	830	6400	75	-30°C	30°C	40°C	6-10m	●	●	0.1	09	66	19.5
GRN72	830	7200	84	-30°C	30°C	40°C	6-10m	●	●	0.1	09	66	19.5
GRN80	830	8000	93	-30°C	30°C	40°C	6-10m	●	●	0.1	09	66	19.5
GRN88	830	8800	102	-30°C	30°C	40°C	6-10m	●	●	0.1	09	66	21
GRN96	830	9600	111	-30°C	30°C	40°C	6-10m	●	●	0.1	09	66	21
ECO99	740	9913	96	-30°C	30°C	40°C	6-10m	●	●	0.1	09	66	19.5
ECO113	740	11329	110	-30°C	30°C	40°C	6-10m	●	●	0.1	09	66	19.5
ECO127	740	12745	123	-30°C	30°C	40°C	6-10m	●	●	0.1	09	66	19.5
ECO142	740	14161	137	-30°C	30°C	40°C	6-10m	●	●	0.1	09	66	19.5
ECO156	740	15577	151	-30°C	25°C	35°C	6-10m	●	●	0.1	09	66	21
ECO170	740	16993	165	-30°C	25°C	35°C	6-10m	●	●	0.1	09	66	21
ECO106	657	10563	96	-30°C	30°C	40°C	6-10m	●	●	0.1	09	66	19.5
ECO121	657	12072	110	-30°C	30°C	40°C	6-10m	●	●	0.1	09	66	19.5
ECO136	657	13581	123	-30°C	30°C	40°C	6-10m	●	●	0.1	09	66	19.5
ECO151	657	15090	137	-30°C	30°C	40°C	6-10m	●	●	0.1	09	66	19.5
ECO166	657	16599	151	-30°C	25°C	35°C	6-10m	●	●	0.1	09	66	21
ECO181	657	18108	165	-30°C	25°C	35°C	6-10m	●	●	0.1	09	66	21
ECO81	830	8125	96	-30°C	30°C	40°C	6-10m	●	●	0.1	09	66	19.5
ECO93	830	9286	110	-30°C	30°C	40°C	6-10m	●	●	0.1	09	66	19.5

220 - 240V
50 - 60Hz

Inrush Current
105a (230v) / 30µs

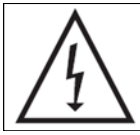

Disconnect before servicing
Mettre hors tension avant intervention
Offnen nur spannungsfrei
Demonteren voor onderhoud
Togliere tensione prima di fare manutencione
Desconectar antes de manipular
Bryt strömmen före lampbyte

12NC 4413 181 05852
Versiondate: 01 / 11
Data subject to change without notice
Printed in United Kingdom
www.philips.com/lighting

PHILIPS

1

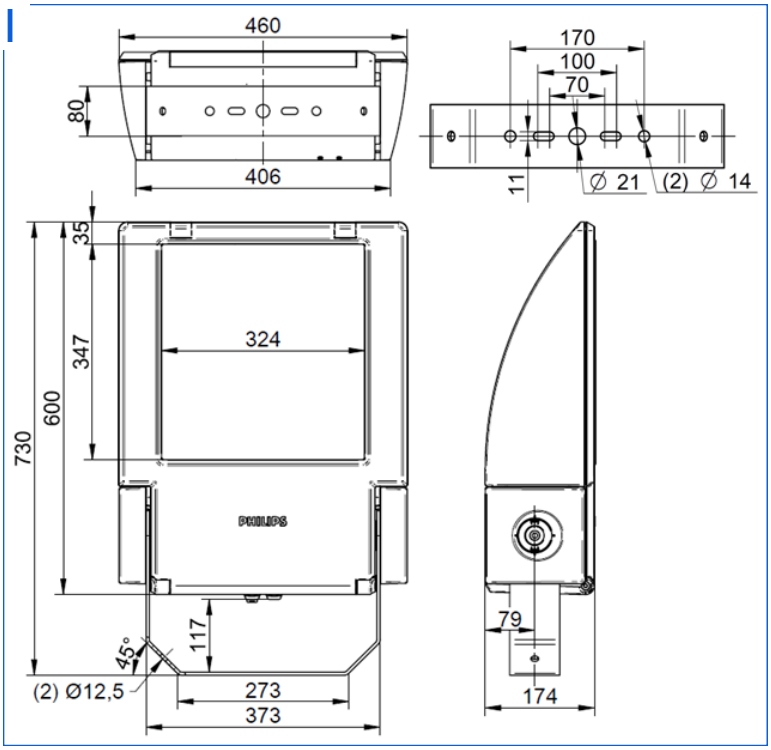

2

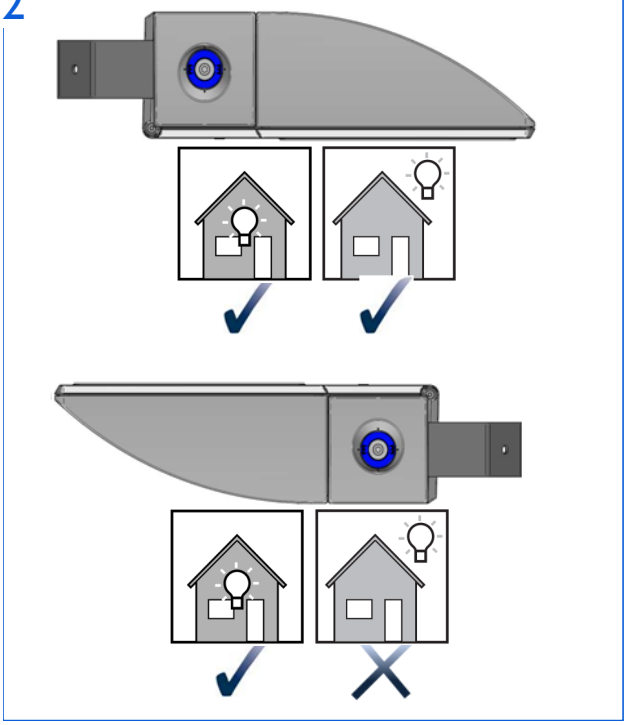

3

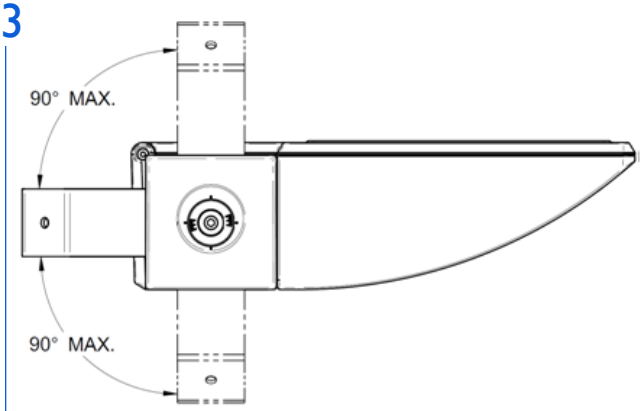

4

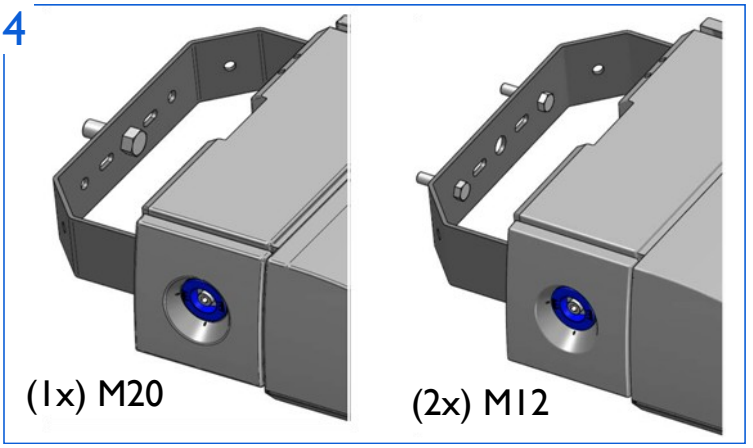

5

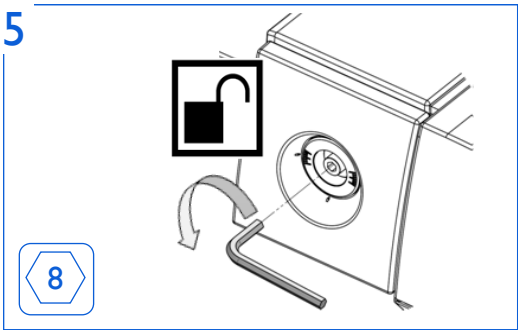

6

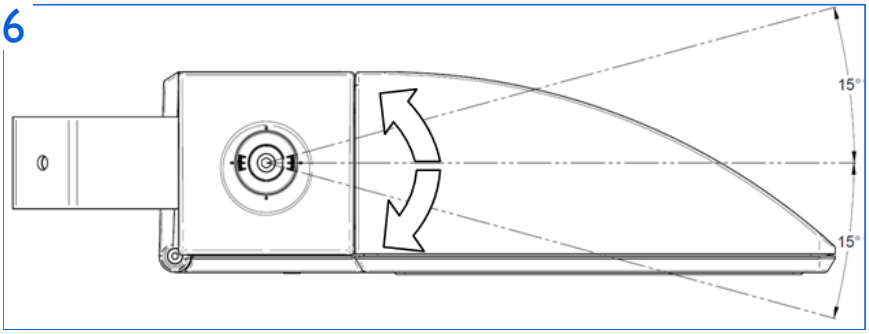

7

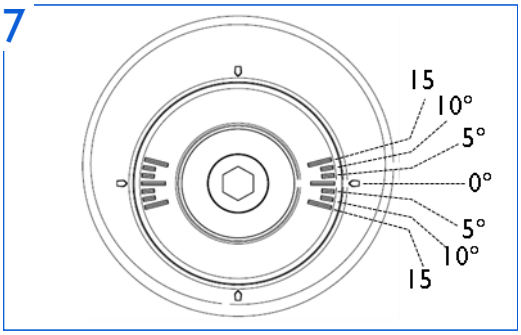

8

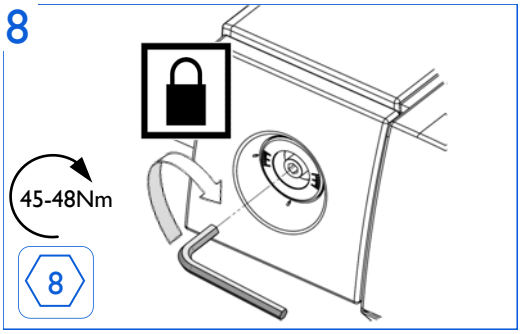

12NC 4413 181 05852
Versiondate: 01 / 11
Data subject to change without notice
Printed in United Kingdom
www.philips.com/lighting

PHILIPS

9

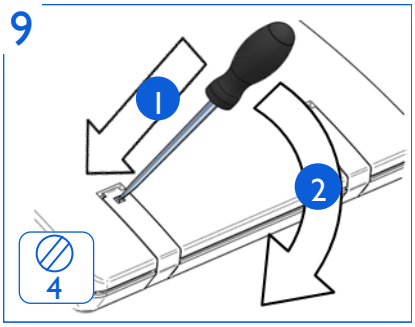

10

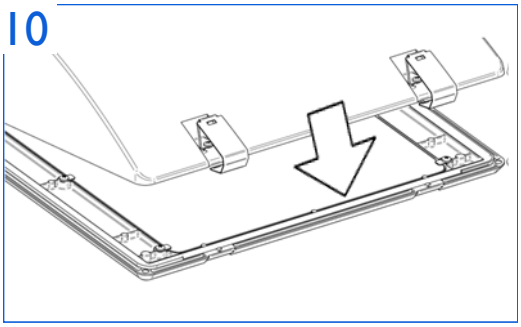

11

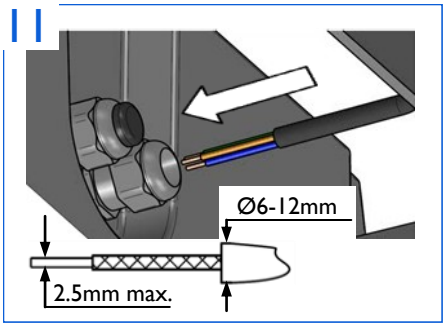

12

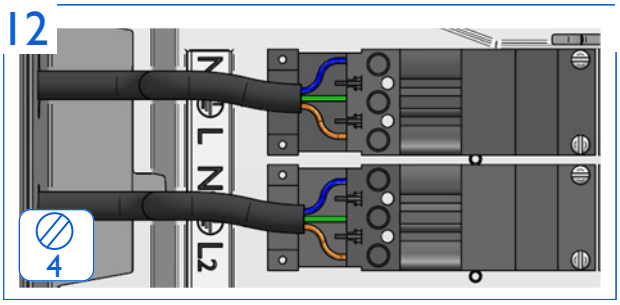

13

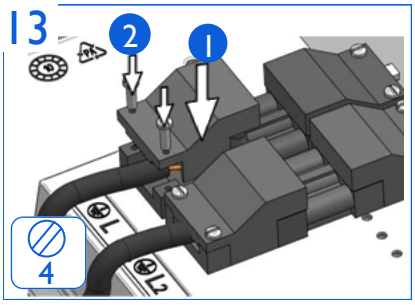

14

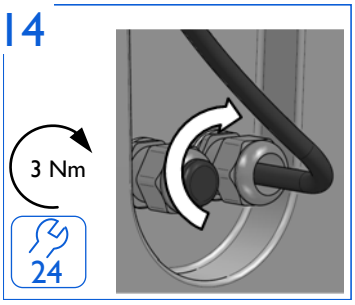

15

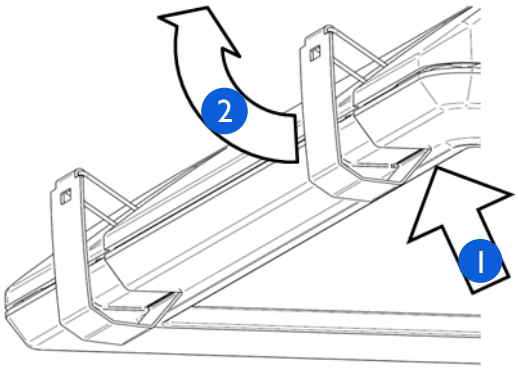

16

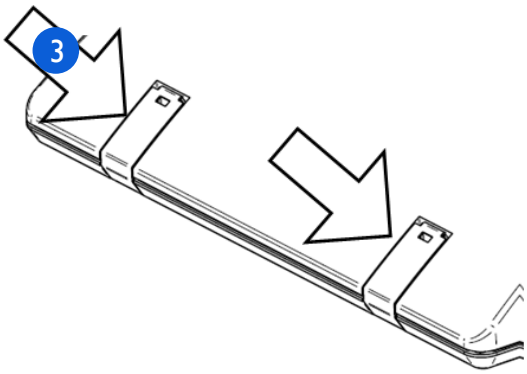

17

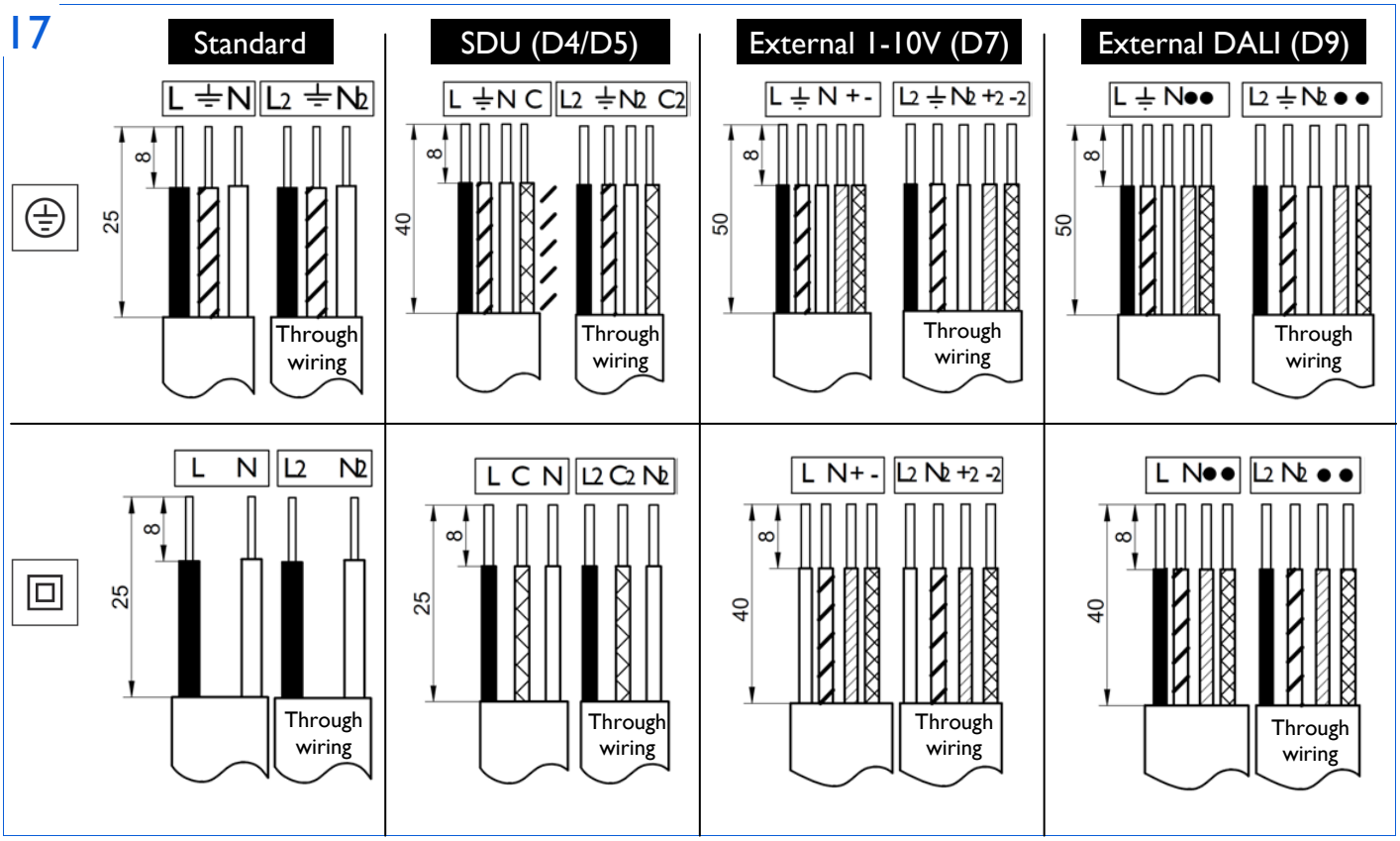

12NC 4413 181 05852
Versiondate: 01 / 11
Data subject to change without notice
Printed in United Kingdom
www.philips.com/lighting

PHILIPS