Design and Access Statement

Planning portal ref 01882698

Planning application for a hand car wash and valeting centre in the car park at Tesco Bursledon Towers

2 April 2012

Waves™

© Waves Consultancy Ltd

Overview

Waves Consultancy Ltd proposes installing a dedicated wash and valeting area, operating from 8 car parking spaces, as shown on pages 3-6.

Waves Consultancy Ltd has identified a business opportunity within the car park of Tesco, Hamble Lane, Bursledon, Southampton and having gained consent from the car park owners, we are applying for planning permission to provide an efficient and compliant car wash operation.

Design: Our proposal involves the erection of a canopy and the stationing of an office. The proposal is functional in its design and we do not believe it will be visually obtrusive due to it's very limited size and height.

Transportation: The proposed location has been selected after consideration was given to the provision of services (water, power and drainage) and a position that would minimise any impact on the customers wishing to visit the Store. The proposed layout is positioned to permit safe access across the car park for customers who can use the existing designated pedestrian walkways for access to the Store. We believe that the car park has adequate capacity for this proposal, even at the busiest time of the year. We do not believe the proposed car wash will affect the egress/ingress routes of the car park and we do not think there will be any impact on local transport.

Retail Issues: Waves Consultancy Ltd believes that the introduction of the car wash will create new and sustainable economic growth in the area; it will have a positive impact on local employment creating an estimated four full-time and four part-time jobs. The car wash will also provide increased consumer choice with the addition of the service.

The service will operate from eight car parking spaces (cabin to be located on 'dead space); we believe that the proposed use is ancillary to the retail use of the site and therefore there will be no actual loss of car parking spaces. It is likely that the facility will be used in association with any trip to the supermarket rather than resulting in a purpose built trip, therefore there will be no significant increase in traffic or car park usage associated with the car wash.

The design allows for both ambulant and disabled customers to either remain in their vehicle whilst it is washed (following which they will then park their car closer to the Store to go shopping) or they can leave the vehicle with the operatives and collect upon completing their visit to the Store.

Residential Amenity: We do not believe that there will be a material increase in noise and disturbance from the site because of the existing use of the site. The jet washes are housed within the office to minimise any noise. The proposed hours of operation reflect the standard operating hours of a retail outlet.

Environmental Compliance: The car wash operation will be environmentally friendly. A water-recycling unit will be provided within the office, recycling oil free wash-water and saving up to 85% of fresh water (please see page 4). We will only use biodegradable detergents on our car wash.

© Waves Consultancy Ltd

Operational layout

Waves proposes operating from 8 car park spaces as per the layout below (for location within the car park please refer to plan 01882698 – Waves hand car wash – 1.1250 location)

Waves Consultancy Ltd proposes installing a dedicated wash and valeting area as shown below.

- Waves will install a **water recycling unit** (p.4)
- The site **portable office** is of metal construction (p.5)
- The **canopy** is a cantilever design, with a pre constraint PVC cover (p.6)
- The **jet wash** and **vacuum** specifications are designed to keep noise levels to a minimum
- The **signage** designs and specifications are detailed on p7-9

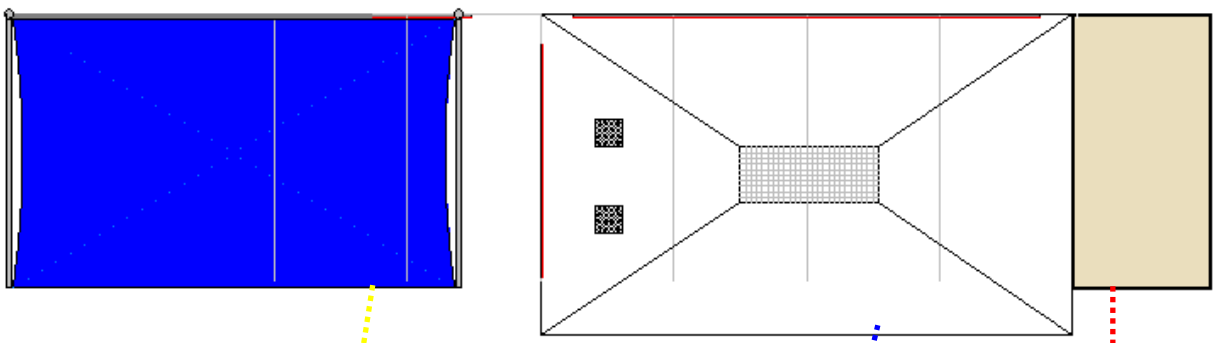

Proposed **dry valeting** area (4 car park spaces) with cantilevered canopy cover

Proposed **wet wash** area (4 car park spaces) with centralised drain within the wash pad to channel water to recycling unit

Proposed location for **customer reception area & recycling unit** (located in dead space)

© Waves Consultancy Ltd

Wet wash area and water recycling unit

Proposed works to wet wash area

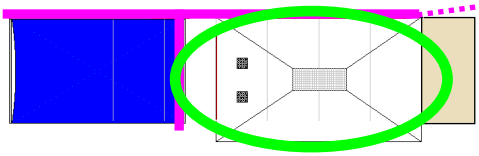

Screening approx. 2m high will be installed to protect customers from spray outside wet area, to separate the wet and dry areas and to demarcate the whole area. Screening will be foamex with a steel frame (please see picture below). The screening will be branded to advertise the car wash.

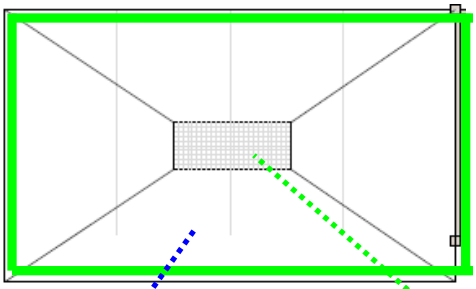



Waves will install a water source to the wet area

Installation of a wash pad and drainage in the wet area so that waste water will be channelled to a centralised drain that will filter to the recycling plant

Water recycling unit

The Waves car wash operation will be an environmentally friendly operation. Waves proposes the installation of a (Karcher) recycling unit within the operating area (recycling plant will be housed within the cabin).

The collection tank will be sludge gulped as required by a licensed contractor and the waste disposed of as per EA guidelines.

Specification Sheet

WRP 1000 Comfort - Water recycling unit.

The WRP 1000 Comfort expands the product range of Kärcher's water recycling units. Recycling of oil free wash water makes ecological sense and is now a very real prospect for car dealers, workshops and smaller vehicle washes with a water consumption of less than 1000 l/h. The WRP 1000 Comfort features a revolutionary filtering system called Filatwist. This system completely retains all dirt particles larger than 5 µm. About 1000 litres of wash water are recycled every hour saving up to 85% of fresh water, since it is only used for clear rinsing.

KÄRCHER®

makes a difference

© Waves Consultancy Ltd

Cabin design

Proposed cabin design

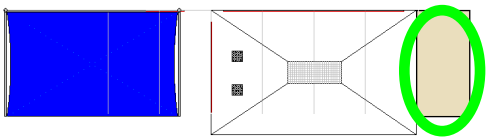

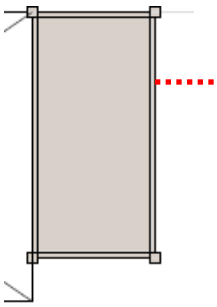

Steel office (16’ x 8’) unit, painted RAL10-B-19 Metal Satin Finish “Mushroom” and clad with larch timber around the top (up to 1m high) as shown right. Partitioned internally with one side a customer reception and the other side for storage of detergents and to house the green recycling plant. Jet washes will also be housed within the cabin to minimise noise outside



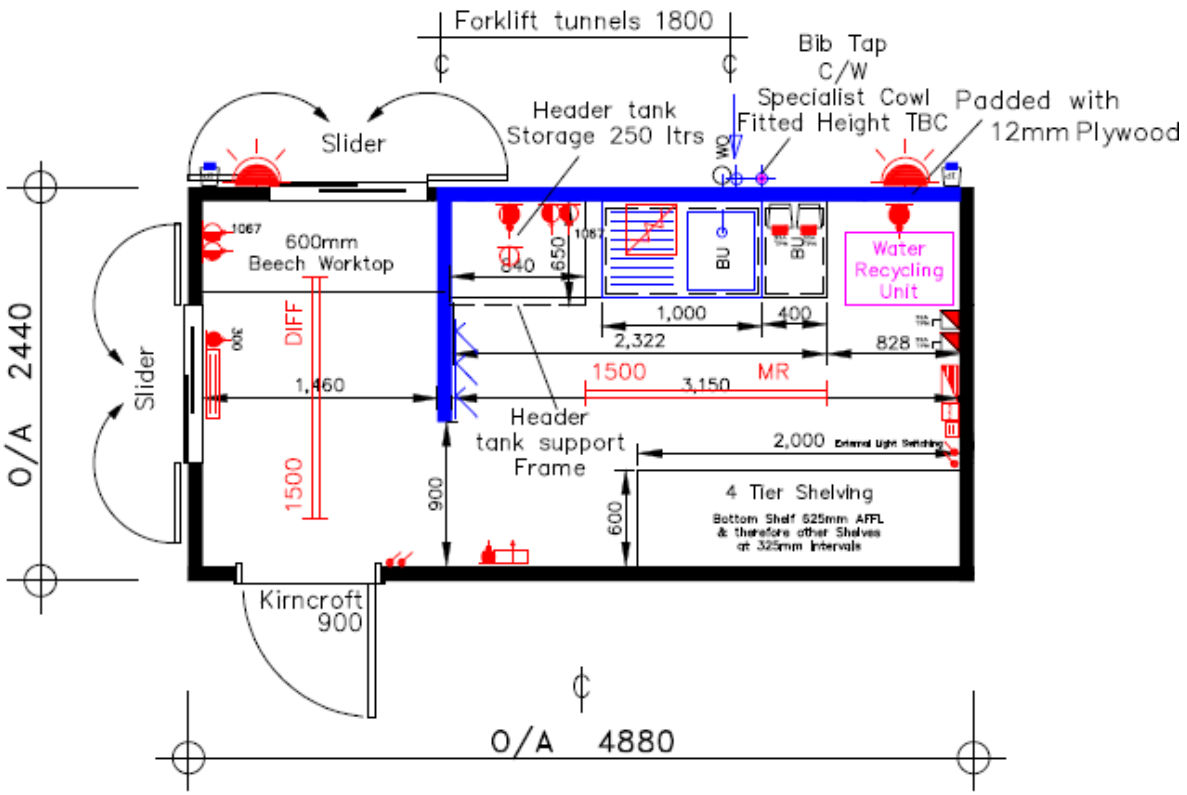

GENERAL WORKS

- Power to reception
- Water source to reception
- Signage to include mandatory health & safety, car wash menu and adverts for the service

© Waves Consultancy Ltd

Dry valeting area and canopy

Proposed works to dry valeting area

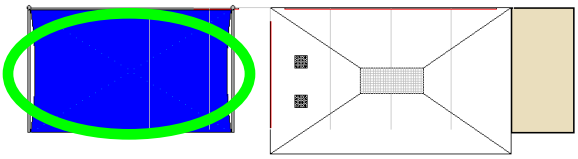

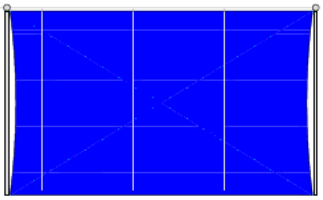

Installation of a two legged cantilevered canopy (bluePVC) over the dry valeting area, covering approximately four car park spaces, as per the detailed specification below. A (down lighter) floodlight will be installed under the canopy

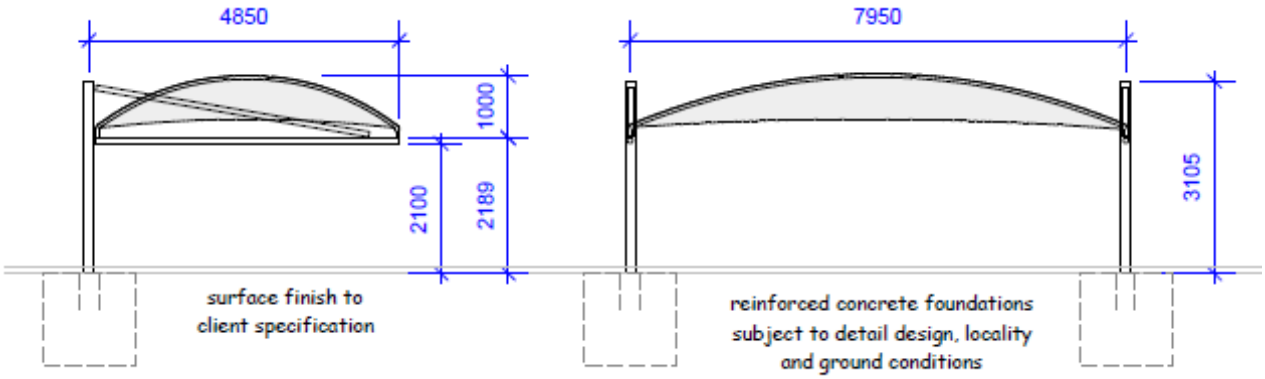

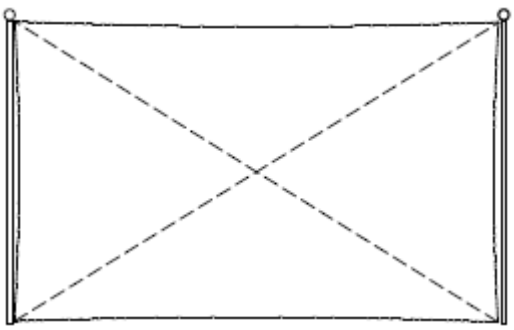

Tensile Characteristics of Fabric	
Base Fabric	Polyester HT1100 DTex
Coating	PVC
Finish	Biface
Fire Rating	M2 NFP 92.503/DIN 4102 B1/BS 5438
Colour Reference	5007 - Silver/Grey



All units on
168mm dia. Galvanised Steel Support Posts
&
89mm dia. Galvanised Steel horizontal side/inclined brace members
&
60mm dia. Galvanised Steel Roof Arches

Connection plates and bolts to manufacturer's details

carapax

© Waves Consultancy Ltd

Signage

Waves has applied for advertisement consent. Designs and specifications are below; for location within the operating area please refer to plan 01882698 – Scaled drawings of signage and elevations

Advertisement 1 **Landscape menu below window**

2000mm wide x 1000mm high – 5mm foamex





Advertisement 2 and 3 **Welcome sign**

1500mm wide x 350mm high – 5mm foamex



© Waves Consultancy Ltd

Signage

Advertisement 4 **Menu sign on cabin door**

800mm wide x 1000mm high – 5mm foamex



Advertisement 5 **Opening hours**

1200mm wide x 1000mm high – 5mm foamex

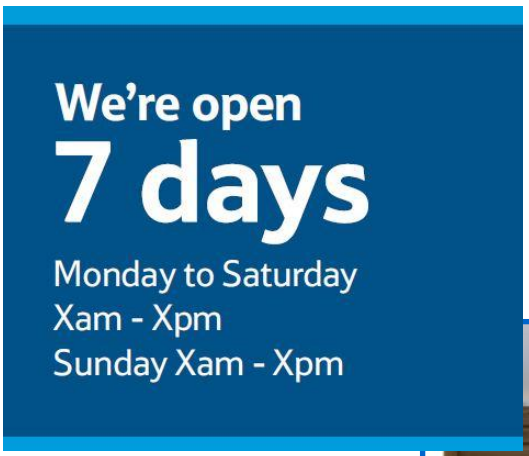



© Waves Consultancy Ltd

Signage

Advertisements 6, 9,10,12,13,14,17,18, 21

Screen sign - Design 1

2000mm wide x 1800mm high – Foamex panel

Advertisements 7, 11, 15, 19, 23, 24

Screen sign - Design 2

2000mm wide x 1800mm high – Foamex panel

Advertisement 8, 12, 16, 20, 22, 25

Screen sign - Design 3

2000mm wide x 1800mm high – Foamex panel



Design 1



Design 2

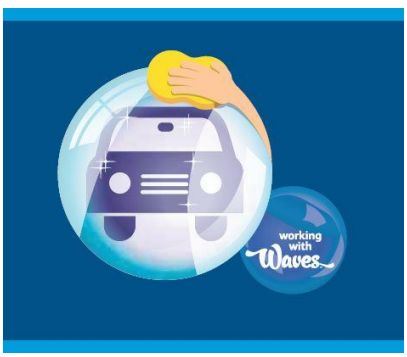

Design 3

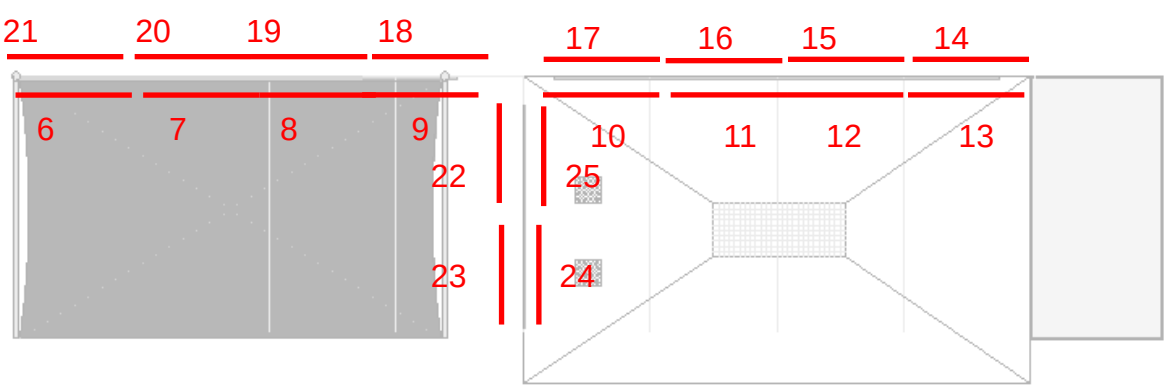

© Waves Consultancy Ltd

If you require any further information, please do not hesitate to contact us:

Waves Consultancy Limited

4 College Mews

212 St Ann's Hill

London

SW18 2SJ

Tel. 020 8877 3884

Fax. 020 8874 2297

Email. info@wavesconsultancy.co.uk

Waves™

© Waves Consultancy Ltd