SIGNAGE SPECIFICATION

SIGN TYPE	DESCRIPTION
1IB	LED internally illuminated built up letters & light box gable sign
LOCATION	
RE: ELEVATIONS	SPECIFICATION
QUANTITY	900mm set letters
RE: ELEVATIONS	3063mm x 1616mm o/a
REF CODE	*n/a*

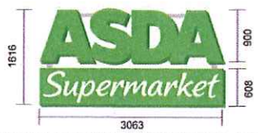

INTERNALLY ILLUMINATED BUILT UP SIGN BOX AND LETTERS. STATIC ILLUMINATION MAX 600 CANDELLA

SCALE 1:100

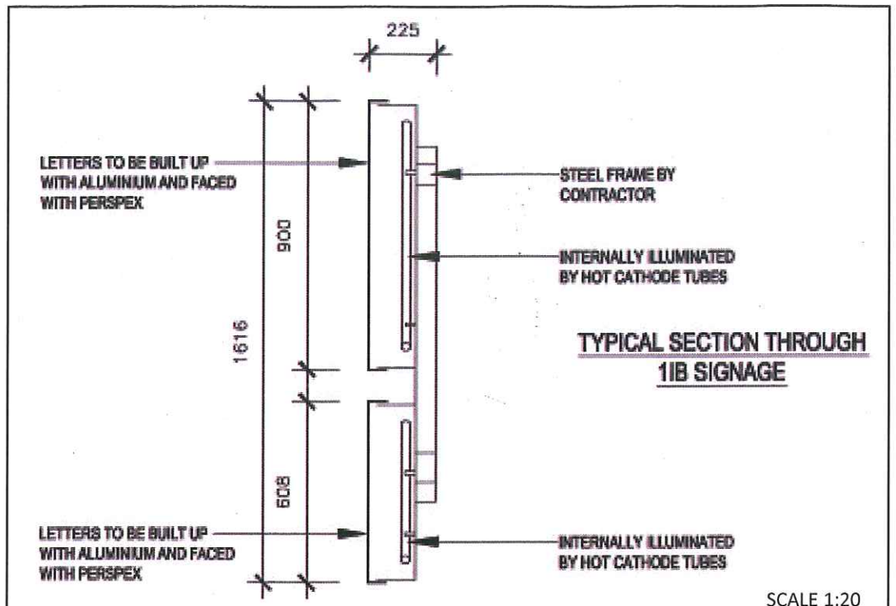

SCALE 1:20



SIGN POSITION 10

NEW TOTEM FRAME AND ALUMINIUM PAINTED LIVERY PANEL SHOWING ASDA BRANDING.

SCALE 1:50

SIGN TYPE	DESCRIPTION
2IB	LED internally illuminated built up letters & light box
LOCATION	
RE: ELEVATIONS	SPECIFICATION
QUANTITY	900mm set letters
RE: ELEVATIONS	7533mm x 900mm o/a
REF CODE	*n/a*

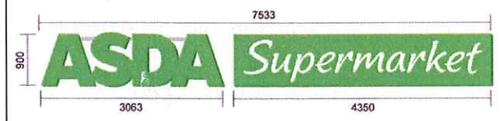

2IB

INTERNALLY ILLUMINATED BUILT UP SIGN BOX AND LETTERS. STATIC ILLUMINATION MAX 600 CANDELLA

SIZE = 7533mm x 900mm

SIGN TYPE	DESCRIPTION
BF 900	Externally illuminated fret cut / vinyl letters
LOCATION	
RE: ELEAVTIONS	SPECIFICATION
QUANTITY	900mm set letters
RE: ELEVATIONS	3063mm x 900mm o/a
REF CODE	*n/a*



SCALE 1:100

SIGN TYPE	DESCRIPTION
BF 650	Externally illuminated fret cut / vinyl letters
LOCATION	
RE: ELEAVTIONS	SPECIFICATION
QUANTITY	650mm set letters
RE: ELEVATIONS	650mm x 2400mm o/a
REF CODE	*n/a*



SIGN TYPE	DESCRIPTION
13	LED internally illuminated built up letters & light box
LOCATION	
RE: ELEVATIONS	SPECIFICATION
QUANTITY	700 mm set letters
RE: ELEVATIONS	7533x700mm o/a
REF CODE	*n/a*

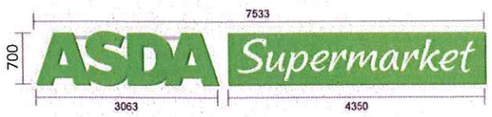

SCALE 1:100

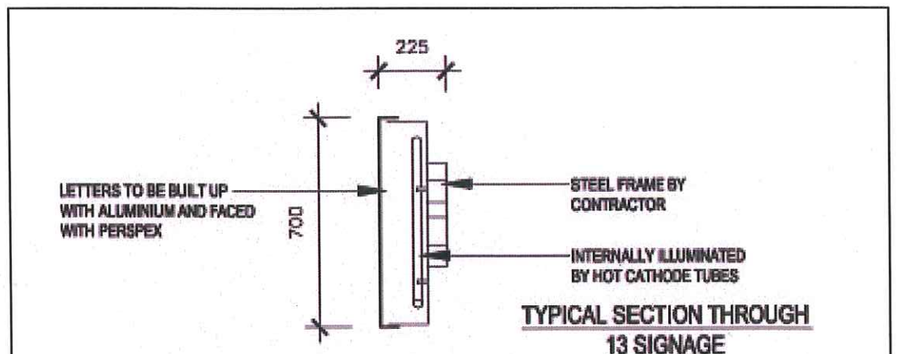

SCALE 1:20

SIGNAGE SPECIFICATION



SIGN POSITION 12

PLASTIC FASCIA SURROUND TO ATM

UNIT WITH 'cash' LIGHTBOX ABOVE..

SCALE 1:20



SIGN POSITION 7A

WALL MOUNTED POS BANNER

Size 6100mm x 950mm

SCALE 1:50

SIGN POSITION 9

REVERSE PRINTED & BACKED UP APPLIED VINYL GRAPHICS TO EXISTING WINDOWS. SIZE – SUBJECT TO SURVEY



NTS



SIGN POSITION 7B

WALL MOUNTED POS BANNER

Size 6100mm x 2250mm

SCALE 1:50