4/11/68403

Bovis Homes

Dowd's Farm, Hedge End
Bat Roost Monitoring Report

November 2008

Revision	Date	Author	Checked	Approved
0	05/11/08	S Fielding/K Linnane	M Nixon	S Bracken

Disclaimer

Copyright Keystone Environmental Limited. All rights reserved.

No part of this report may be copied or reproduced by any means without prior written permission from Keystone Environmental Limited. If you have received this report in error, please destroy all copies in your possession or control and notify Keystone Environmental Limited.

This report has been prepared for the exclusive use of the commissioning party and unless otherwise agreed in writing by Keystone Environmental, no other party may use, make use of or rely on the contents of the report. No liability is accepted by Keystone Environmental Limited for any use of this report, other than for the purposes for which it was originally prepared and provided.

Opinions and information provided in the report are on the basis of Keystone Environmental Limited using due skill, care and diligence in the preparation of the same and no explicit warranty is provided as to their accuracy. It should be noted and it is expressly stated that no independent verification of any of the documents or information supplied to Keystone Environmental Limited has been made.

Keystone Environmental
Practical Ecological Solutions

Keystone Environmental Ltd
The Old Barn, Park Farm Buildings
Beverston, Tetbury,
Gloucestershire, GL8 8TT

Tel: +44 (0) 1666 503687
Fax: +44 (0) 1666 503118
Email: info@keyenv.co.uk
Web: www.keyenv.co.uk

Contents

1.0 Introduction 1

Background 1

Site Characteristics 1

2.0 Methodology 2

Internal Building Inspection 2

Emergence Surveys 2

Site Status Assessment 2

Nomenclature 3

3.0 Survey Results 4

Visual Inspection of Building Internally 4

Emergence Surveys 4

4.0 Evaluation and Conclusions 5

5.0 Survey and Reporting Constraints 6

6.0 References 7

Plans

Drawing 4210/15/2/psd1 Monitoring Survey Results

Appendices

Appendix 1 Fauna mentioned in Text

Appendix 2 Weather Conditions

Appendix 3 Monitoring Survey Results

1.0 Introduction

Background

1.1 Dowd's Farmhouse sits centrally within a large, formally Greenfield, site which is currently being developed to residential use. The entire site is owned and is being developed jointly by Bovis Homes and Taylor Wimpey, Bovis Homes being the lead developer. The Farmhouse is also jointly owned by Bovis Homes and Taylor Wimpey.

1.2 Eastleigh Borough Council (EBC) Building Conservation Officers expressed significant concern over the structural condition of the Farmhouse, part of which is Grade II listed. They insisted that Bovis Homes and Taylor Wimpey undertake emergency work to the farmhouse to prevent further deterioration until a decision is made about the long-term future of this structure.

1.3 The Farmhouse supports a Brown Long-eared bat maternity roost and a low status Pipistrelle roost and a licence was granted to permit the emergency works requested by EBC.

1.4 As part of the conditions of European Protected Species (EPS) licence number WLF025437, Keystone Environmental Ltd was instructed by Bovis Homes to undertake monitoring of Dowd's Farmhouse at Hedge End.

1.5 The aim of the survey was to:

- Monitor the status of the roosts as a condition of the EPS Licence
- Determine whether the works to secure the building have had any significant impact upon the status of the bat roosts within the building

Site Characteristics

1.6 Dowd's Farm is situated to the north of Hedge End, east of the M27, off Junction 7 (Central grid reference SU 489 147). The site is characterised by an area of former farmland, part of which is now new residential development and associated gardens. To the centre of this sits a large listed farmhouse (associated outbuildings were demolished in spring 2006). As recommended in the 2005 Bat Activity Survey (Keystone Environmental, 2005), the hedgerows running south and west of the building have been retained as these were deemed to be important flight corridors for bats commuting between the roost and foraging habitat in the wider landscape.

1.7 A large proportion of the site boundary is delineated by a band of standard trees. To the north and east lie more residential developments and to the south is an industrial estate. Along the western boundary is Tollbar Way (B3342). On the far side of this is Moorgreen Meadows Site of Special Scientific Interest (SSSI).

2.0 Methodology

Internal Building Inspection

2.1 As a condition of the EPS Licence, the farmhouse was subject to an internal inspection to assess the current status of the Brown Long-eared maternity roost identified in previous surveys (Keystone Environmental, 2006). This involved inspection of the interior of the north section of the building for evidence of use by bats, *i.e.* fresh droppings, feeding remains *etc.* The south section of the building (Grade 2 listed building) and the internal roof spaces were not inspected as the building has degraded considerably and these areas were not considered safe to enter. Low intensity torches were used during the inspection to minimise disturbance to roosting bats.

Emergence Surveys

2.2 The farmhouse was subject to emergence surveys to determine the status of the existing Brown Long-eared and Pipistrelle roosts as a condition of the EPS Licence for the works conducted on the building. Three sets of emergence surveys were conducted over the months of July and August 2008. In each instance four surveyors arrived ½ hour before dusk and continued the survey for approximately 1½ hours after dusk (Bat Conservation Trust, 2007).

2.3 All surveyors were equipped with a Stag Electronics Duet bat detector used in combined frequency division and heterodyne mode. Registrations were recorded on MP3 players and notes were made on species recorded, behaviour, time of registration, location and direction of flight where possible, including incidental observations from surrounding habitats. Where it was not possible to identify a bat species on site, audio recordings were later analysed using BatSound Standard Sound Analysis Software (Version: 3.31, 2001, Pettersson Elektronik AB).

2.4 All surveys were orchestrated by an experienced licensed bat worker holding an all counties, all species licence (Licence Number 20072406). Accredited agents under this licence conducted the dusk emergence surveys.

Site Status Assessment

2.5 Dowd's Farmhouse has been evaluated to assess which of the following categories it falls into, if any (Mitchell-Jones, 2004):

- maternity site, where babies are born and raised to independence
- hibernation site, where bats may be found during the winter
- mating site, where males and females gather during the autumn
- feeding site, where bats rest between feeding bouts during the night but are rarely present during the day
- transitional (or swarming) site, where bats may be present during the spring or autumn

- summer roost, used by males and non-breeding females

Nomenclature

2.6 The English name only of flora and fauna species is given in the main text of this report. A list of all species mentioned in the text together with scientific names is given in *Appendix 1*.

3.0 Survey Results

Visual Inspection of Building Internally

3.1 The roof space and part of the southern section of the building (Grade 2 listed building) could not be surveyed as the building had deteriorated significantly and were deemed unsafe to enter.

3.2 Following the first emergence survey, a large pile of Brown Long-eared droppings (approximately 1 m diameter) and feeding remains were found on the first floor landing above the main stairway of the north section of the building underneath a light fitting. Prior to the second emergence survey, four Brown Long-eared bats were observed roosting on the same light fitting. Prior to the third and final emergence survey, two Brown Long-eared bats were again observed roosting on the light fitting.

Emergence Surveys

3.3 The emergence survey results are summarised in *Drawing Number 4210/15/2/psd1* and full results are presented in *Appendix 2 and 3*.

3.4 During the course of the three emergence surveys no Brown Long-eared bats were observed or detected emerging from the roost of the farmhouse. However, during the second and third emergence surveys, a surveyor was positioned inside the building to note down the Brown Long-eared behaviour and to try and establish their exit routes. During the third survey a single Brown Long-eared bat was observed flying through the first floor of the building and down the stairs. Although this individual was not observed emerging from the building by surveyors outside the building it can be assumed that it emerged, probably through the open door on the ground floor. The bats observed roosting on the light fitting did not leave the roost during either survey periods.

3.5 During the emergence surveys two Common Pipistrelle bats were observed and it was thought that they emerged from the eastern gable end of the building from below the eaves of the north section of the farmhouse.

3.6 Throughout the survey period moderate levels of Common Pipistrelle foraging activity (near constant activity of a small number of individuals) were noted along the north face and at the north-east corner of the farmhouse. Low levels of foraging activity were also recorded at the south-east, south-west and north-west corners of the farmhouse. Low levels of Brown Long-eared activity were also recorded at the north-east corner of the farmhouse. Flight lines identified during the surveys were usually associated with the vegetation surrounding the farmhouse. Pipistrelles were recorded commuting along the west, north and east faces of the farmhouse, Brown Long-eared bats were recorded commuting along the northern and western faces and Noctules were recorded at the north-east corner of the farmhouse. The highest levels of commuting activity were found to be associated with the northern face of the farmhouse. No activity was recorded in association with the retained hedgerows although these were not visible from where surveyors were positioned as security fencing in place around the farmhouse obstructed the view of these flight lines.

4.0 Evaluation and Conclusions

4.1 During the 2005 and 2006 surveys (Keystone Environmental, 2005 & 2006), peak numbers of one and four Brown Long-eared bats respectively were observed roosting within the roof space of the farmhouse. During these surveys up to eleven (2005 survey) and ten (2006 survey) individuals of this species were also observed emerging from the roost within the farmhouse. No bats were recorded emerging from the building during the 2008 survey although a peak count of four bats was observed roosting on the first floor. The large pile of feeding remains and droppings under the light fitting indicates regular use by a number of bats. The results of this survey show that Brown Long-eared bats are now roosting within the main house. This is likely due to the interior of the house being boarded up (lowering the light levels of the building) and becoming more dilapidated (providing access for bats to these areas and more suitable roosting conditions). The number of Brown Long-eared bats observed and large number of droppings on the first floor of the building suggests that a small maternity roost is still present but since 2005 the number of Brown Long-eared bats appears to have fallen. However, they are extremely difficult to detect emerging from buildings due to their late emergence time and it is possible that if they have ceased using known egress points, bats could have been missed during the surveys. If the former is true, insufficient data has been obtained to conclude whether this is a natural change in the population or the bats have suffered disturbance at this site.

4.2 During the 2005 survey up to four Pipistrelles were observed emerging from the farmhouse while during the 2006 survey no Pipistrelles emerged. The current survey shows that Pipistrelles are still roosting within the structure and the egress points being used by this species have not changed in the intervening years. The status of this roost is, as in 2005 and 2006, a low status roost and it appears the works on the farmhouse have not affected where these bats are roosting or where they are emerging from.

4.3 High levels of Pipistrelle foraging activity were recorded to the east and west of the farmhouse during the 2005 and 2006 surveys and Brown Long-eared bats were observed foraging along the north and west faces of the farmhouse (Keystone Environmental, 2005 & 2006). The current surveys showed lower levels of Pipistrelle foraging around the farmhouse and very low levels of Brown Long-eared activity were recorded at the north-east corner of the farmhouse. This suggests that although the same species are using the site, the current levels of activity are significantly lower. Levels of activity along the retained flight corridors to the west and south of the farmhouse could not be assessed as views of these flight lines were obstructed by high fencing in place around the farmhouse.

5.0 Survey and Reporting Constraints

5.1 Every effort has been made in this report to predict the occurrence of fauna in suitable habitats and absence in unsuitable habitats, based on current scientific literature. However, it should be noted that wildlife do not necessarily conform to standard behaviour, therefore predictions cannot be validated with absolute certainty without unequivocal evidence.

5.2 The roof space of the farmhouse was not accessed due to health and safety concerns.

5.3 Activity along the retained flight lines (hedgerows to west and south of the farmhouse) was not recorded as the view of these areas was obstructed by a high fence in place around the farmhouse.

5.4 Brown Long-eared bats are extremely difficult to pick up on bat detecting equipment and because they emerge after dark are also difficult to observe when emerging from roost sites. For these reasons bats emerging from the building may have gone undetected, particularly if they have ceased using known egress points.

5.5 This report details records of fauna species noted during the field survey and anecdotal evidence. It should not be viewed as a complete list of flora and fauna species, which may frequent or exist on site at other times of the year.


N
Farm House
Key
Buildings
Pipistrelle Emergence Points
Low Brown Long-eared Foraging
Brown Long-eared Commuting
Moderate Pipistrelle Foraging
Low Pipistrelle Foraging
Pipistrelle Commuting
Noctule Commuting
Dowd's Farm, Hedge End
Monitoring Survey Results
Bovis Homes
A4
RL
October 2008
Keystone Environmental

Keystone Environmental Ltd

Dowd's Farm, Hedge End

Bat Survey Weather Conditions

Date	Temp (°c)	Wind speed	Cloud cover (%)	Rain
31/07/2008	19.5	No Wind	100%	Yes
12/08/2008	13	Moderate Wind	65%	Yes
27/08/2008	19	No Wind	90%	No

Keystone Environmental Ltd.

Dowd's Farm, Hedge End

Appendix 2: Monitoring Survey Results

Date	Surveyor	Time From	Time Until	Species	Behaviour
31/07/2008	JJ	21:31		Pipistrelle sp	Brief registration
31/07/2008	JJ	21:39		Pipistrelle sp	Brief registration
31/07/2008	JJ	21:43		Pipistrelle sp	Brief registration
31/07/2008	JJ	21:55		Pipistrelle sp	Brief registration
31/07/2008	JJ	22:09		Pipistrelle sp	Brief registration
31/07/2008	JJ	22:17		Pipistrelle sp	Brief registration
31/07/2008	JJ	22:27		Pipistrelle sp	Brief registration
31/07/2008	JJ	22:37		Pipistrelle sp	Brief registration
31/07/2008	HP	21:15		Noctule	Commuting
31/07/2008	HP	21:27		Pipistrelle sp	Commuting
31/07/2008	HP	21:29		Common Pipistrelle	Commuting
31/07/2008	HP	21:37		Common Pipistrelle	Commuting
31/07/2008	HP	21:45		Noctule	Brief registration
31/07/2008	HP	21:56		Pipistrelle sp	Feeding
31/07/2008	HP	21:01		Pipistrelle sp	Brief registration
31/07/2008	HP	21:23		Pipistrelle sp	Brief registration
31/07/2008	HP	21:24		Pipistrelle sp	Brief registration
31/07/2008	HP	21:37		Pipistrelle sp	Brief registration
31/07/2008	SF	21:12		Pipistrelle sp	Emergence
31/07/2008	SF	21:14		Noctule	Commuting
31/07/2008	SF	21:16		Common Pipistrelle	Commuting
31/07/2008	SF	21:20		Common Pipistrelle	Commuting
31/07/2008	SF	21:26		Common Pipistrelle	Brief registration
31/07/2008	SF	21:27		Common Pipistrelle	Feeding
31/07/2008	SF	21:30		Common Pipistrelle	Feeding
31/07/2008	SF	21:36		Common Pipistrelle	Feeding
31/07/2008	SF	21:40		Common Pipistrelle	Feeding
31/07/2008	SF	21:44		Noctule	Commuting
31/07/2008	SF	21:47		Common Pipistrelle	Commuting
31/07/2008	SF	21:52	21:55	Common Pipistrelle	Feeding
31/07/2008	SF	22:00		Common Pipistrelle	Feeding
31/07/2008	SF	22:04		Common Pipistrelle	Feeding
31/07/2008	SF	22:07		Common Pipistrelle	Commuting
31/07/2008	SF	22:13		Common Pipistrelle	Foraging
31/07/2008	SF	22:16		Common Pipistrelle	Foraging
31/07/2008	SF	22:20		Common Pipistrelle	Foraging
31/07/2008	SF	22:22	22:25	Common Pipistrelle	Feeding
31/07/2008	SF	22:27		Common Pipistrelle	Foraging
31/07/2008	SF	22:29		Common Pipistrelle	Foraging
31/07/2008	SF	22:36		Common Pipistrelle	Brief registration
31/07/2008	SF	22:38		Common Pipistrelle	Commuting
31/07/2008	SF	22:41		Common Pipistrelle	Foraging
31/07/2008	SF	22:46		Noctule	Foraging
31/07/2008	SF	22:48		Common Pipistrelle	Feeding
31/07/2008	JG	21:20		Pipistrelle sp	Brief registration
31/07/2008	JG	21:21		Common Pipistrelle	Commuting
31/07/2008	JG	21:40		Brown Long-eared	Commuting
31/07/2008	JG	21:45		Brown Long-eared	Commuting
31/07/2008	JG	21:46		Pipistrelle sp	Feeding
31/07/2008	JG	21:50	21:52	Common Pipistrelle	Foraging
31/07/2008	JG	21:54		Brown Long-eared	Commuting
31/07/2008	JG	21:57		Common Pipistrelle	Foraging
31/07/2008	JG	21:59	22:05	Common Pipistrelle	Foraging
12/08/2008	KL	20:57		Pipistrelle sp	Brief registration
12/08/2008	KL	21:07		Common Pipistrelle	Emergence
12/08/2008	KL	21:13		Common Pipistrelle	Commuting
12/08/2008	KL	21:15		Common Pipistrelle	Commuting
12/08/2008	KL	21:17		Pipistrelle sp	Brief registration
12/08/2008	KL	21:18		Common Pipistrelle	Foraging
12/08/2008	KL	21:19		Common Pipistrelle	Commuting
12/08/2008	KL	21:27		Common Pipistrelle	Foraging
12/08/2008	KL	21:39		Common Pipistrelle	Foraging
12/08/2008	KL	21:40		Common Pipistrelle	Foraging
12/08/2008	KL	21:40		Pipistrelle sp	Foraging
12/08/2008	KL	21:41		Brown Long-eared	Brief registration
12/08/2008	KL	21:42		Common Pipistrelle	Foraging
12/08/2008	KL	21:45		Brown Long-eared	Brief registration
12/08/2008	KL	21:50		Common Pipistrelle	Foraging
12/08/2008	KL	21:55		Brown Long-eared	Brief registration
12/08/2008	KL	21:58		Brown Long-eared and Common Pipistrelle	Brief registration
12/08/2008	JG	21:40		Common Pipistrelle	Brief registration
12/08/2008	SF	21:05		Brown Long-eareds x 4	Fidget, wake up - internally
12/08/2008	SF	21:22	21:25	Brown Long-eared x 1	Fly around internally, perched again -internally
12/08/2008	SF	21:25	21:29	Brown Long-eared x 4	Fidget -internally
12/08/2008	SF	21:29	21:32	Brown Long-eared x 1	Fly around internally, perched again -internally
12/08/2008	SF	21:32		Brown Long-eared x 4	Fidget -internally
12/08/2008	RG	21:15		Pipistrelle sp	Brief registration
12/08/2008	RG	21:20	21:21	Common Pipistrelle	Foraging
12/08/2008	RG	21:28	22:00	Common Pipistrelle	Foraging and feeding

Keystone Environmental Ltd.

Dowd's Farm, Hedge End

Appendix 2: Monitoring Survey Results

Date	Surveyor	Time From	Time Until	Species	Behaviour
12/08/2008	RG	21:40		Noctule	Brief registration
27/08/2008	JG	20:23		Noctule	Foraging
27/08/2008	JG	20:48		Pipistrelle sp	Brief registration
27/08/2008	JG	20:50		Brown Long eared?	Brief registration
27/08/2008	JG	20:50		Pipistrelle sp	Brief registration
27/08/2008	JJ	20:37		Common Pipistrelle	Commuting
27/08/2008	JJ	20:50		Common Pipistrelle	Commuting
27/08/2008	JJ	20:59		Common Pipistrelle	Foraging and commuting
27/08/2008	JJ	21:05		Common Pipistrelle	Foraging and feeding
27/08/2008	JJ	21:06	21:07	Common Pipistrelle	Foraging and feeding
27/08/2008	JJ	21:09	21:19	Common Pipistrelle	Foraging and feeding
27/08/2008	JJ	21:20		Common Pipistrelle	Foraging and feeding
27/08/2008	JJ	21:25		Pipistrelle sp	Brief registration
27/08/2008	JJ	21:26	21:32	Common Pipistrelle	Foraging and feeding
27/08/2008	SF	20:33		Pipistrelle sp	Commuting
27/08/2008	SF	20:44		Common Pipistrelle	Commuting
27/08/2008	SF	21:04		Common Pipistrelle	Foraging and commuting
27/08/2008	SF	21:07		Common Pipistrelle	Brief registration
27/08/2008	SF	21:09		Common Pipistrelle	Foraging
27/08/2008	SF	21:15		Common Pipistrelle	Foraging
27/08/2008	SF	21:23		Common Pipistrelle	Foraging and commuting
27/08/2008	SF	21:26		Common Pipistrelle	Foraging and commuting
27/08/2008	KL	20:15	20:19	Brown Long-eared x 2	1 perched, 1 flying around internally
27/08/2008	KL	20:44		Brown Long-eared	3rd bat appeared and disappeared downstairs

4/11/68403

Dowd's Farmhouse
Hedge End

WILDLIFE PROTECTION AND MITIGATION PLAN

Report for:
Bovis Homes South East Region Ltd
The Manor House
North Ash Road
New Ash Green
Longfield
Kent DA3 8HQ

Overview

AA Environmental LLP (AAe) completed a follow-up internal and external inspection of the Dowd's Farmhouse, Hedge End to update the status of the site for bats on Friday 1 October 2010. In addition, a number of bat surveys have been completed on the site over the past few years, the results of these were reviewed so that a full assessment could be made on the impact on bats and proportionate mitigation measures put forward.

This report has been produced to provide Eastleigh Borough Council with enough information in order to determine the new planning application for the proposals and to partly assist with discharging conditions which were attached to the previous planning permission (Ref: Z/40065/000/00). A series of plans and photographs have been attached to support this report.

Results

The Farmhouse has been recorded as supporting a small brown long-eared (*Plecotus auritus*) and small common pipistrelle (*Pipistrellus pipistrellus*) roost through survey work carried out in 2005 and 2006 by Keystone Environmental. Eastleigh Borough Council (EBC) requested that emergency repairs should be carried out on the Farmhouse until a decision could be made on the future use of the property. A European Protected Species (EPS) licence application was therefore made to permit the emergency works (Ref: WLF025437) which have subsequently been carried out. As part of the licence commitment Keystone Environmental carried out three monitoring surveys of the Farmhouse during 2008. A summary of the previous surveys are detailed in Table 1.

Table 1 Summary of previous survey results.

Date	Survey	Results	Comment
2005	Internal/external inspection	1 BLE.	
	Emergence/activity survey	11 BLE's and 4. Pips.	
2006	Internal/external inspection	4 BLE's.	
	Emergence/activity survey	10 BLE's.	
31 July 2008	Internal/external inspection	No bats.	BLE droppings recorded on first floor.
	Emergence/activity survey	No bats.	Low level of Pip, noctule and BLE activity.
12 August 2008	Internal/external inspection	3 BLE's.	Recorded roosting on a light fitting on the first floor.
	Emergence/activity survey	No bats.	Low level of Pip, noctule and BLE activity.
27 August 2008	Internal/external inspection	2 BLE's.	Recorded roosting on a light fitting on the first floor.
	Emergence/activity survey	No bats.	Low level of Pip, noctule and BLE activity.

BLE – Brown long-eared bat
Pip – Pipistrelle species (mostly common).

The follow-up survey carried out by AAe recorded accumulations of bat droppings along the length of one loft space under the ridge beam (indicative of brown long-eared bats) (Photographs 1 and 2 and TN 1 on Figure 1). In addition, a few scattered individual droppings were recorded in another separate loft space (TN 2 on Figure 1). No bats themselves were recorded during the survey although a few fresh droppings were recorded hanging on to and below a lampshade to a first floor room (Photograph 3 and TN 3 on Figure 1). A section of the house was covered by scaffolding and protective corrugated metal sheeting metal to one side (Photograph 4). The northern section of the house was still exposed and overall the house was in deteriorating state with missing doors, window and tiles.

In summary, the Farmhouse is being used by two species of bats, namely brown long-eared and common pipistrelle bats. It is fully acknowledged that a European Protected Species Licence application is likely to be required for the restoration works to the Farmhouse and further survey work during the appropriate time of year when bats are active will be required to support any licence application.

Notwithstanding the results of any further survey work, appropriate mitigation measures have been provided below to ensure there would be no deleterious effects on the conservation status of the bats that are using the site and therefore favourable conservation status will be maintained.

Mitigation

The renovation works which will be carried out in accordance with the precautionary approach as detailed below and phased so as to ensure one of the two roof spaces will remain available for bats during the works (alternatively a temporary roost could be constructed to provide temporary roosting opportunities which will be taken down after the works). In addition, in order to ensure there are alternative roosting opportunities for bats during the works, six 2FN Schwegler bat boxes will be installed on suitable mature trees present on the site and positioned in accordance with best practice (indicative locations are shown on Figure 2), these will be installed as soon as possible and prior to the works commencing.

On the morning of the works, the internal roof spaces and other areas of the house will be carefully checked by the licensed bat worker/accredited agent for any roosting bats. Where required, the roof and other key features will be removed under the supervision of the licensed bat worker/accredited agent and carried out under a soft strip protocol. The removal of the roof tiles will be timed during the least sensitive times for bats and completed either during March/April or October. The removal of the tiles and other key features (such as weather boarding) will follow the controls detailed below:

- initial works on the roof will be carried out with great care. All roof tiles will be lifted and removed by hand, lifting them clear with two hands rather than lifting the front and rolling the tile backwards which may crush any bats beneath; and
- tiles will also be checked underneath before being stacked as bats sometimes cling to the undersides of tiles.

Should any bats be encountered during this initial check and soft strip, they will be caught by hand by the licensed bat worker/accredited agent and placed in a bat bag. The bat will then be placed in one of the bat boxes which would have been installed on one of the mature trees on the site. The box will have the hole loosely blocked with a piece of cloth to prevent any bats escaping, which will be removed at dusk to allow any bats to move off after dark. The box will be checked the following day for any bats. Should any injured or severely underweight bats be located, remedial measures will be taken, including seeking appropriate care of the bat and providing additional food in the form of mealworms.

In order to maintain access points into the roof spaces, two ridge tiles on each roof section will be raised to provide a gap of around 15-20 mm, with corresponding cuts/gaps through any lining to be installed. Additional access points at each gable end could also be provided. Within each roof space bat boxes (wooden plank construction) will be provided to vary roosting opportunities.

Although the surrounding area has been developed for residential housing any new lighting to be introduced should be fitted with hoods to minimise light spillage and disturbance to bats and not directed onto any of the bat boxes to be installed or access points. The lighting scheme will also be designed to minimise light spillage on to the connecting habitat corridors running to the south and west of the site which provide access to alternative foraging habitat (Moorgreen Meadows SSSI).

A bat monitoring survey will be carried once the renovation works have been completed.

The Council's Ecologist/Biodiversity officer and other interested parties will be kept informed of the work.

The details provided in this Plan, demonstrates that proportionate mitigation is available on the site. Although further information will be required to support a European Protected Species licence application in due course, a suitably worded condition should be attached to the planning permission to ensure the bat issue is adequately addressed.

103130/JDT

October 2010

AA Environmental LLP

Attachments

AA Environmental LLP, Carriage House Office
Guydens Farm, Garsington, Oxon OX44 9AZ
E info@aae-llp.com
T 01865 361859



Photograph 1: Showing the loft space with droppings recorded below the ridge beam.



Photograph 2: Showing the building where the majority of droppings were recorded within the roof space (northern elevation).



Photograph 3: Showing droppings recorded under the lamp shade of a first floor room.



Photograph 4: Showing the southern side of the building.

Rev.	Details	Drawn / Chkd.	Date

PROJECT

Dowd's Farm
Hedge End

TITLE

Photograph Record Sheet

AA Environmental LLP
Carriage House Offices
Guydams Farm
Cersington
Oxon OX44 9AZ
T: 01865 361859
F: 01865 361867
info@aae-llp.com
www.aae-llp.com

Scale	Date Oct'10		Dwg No	Rev.
NTS	Drawn NAS	Chkd. ARB	103130/01	

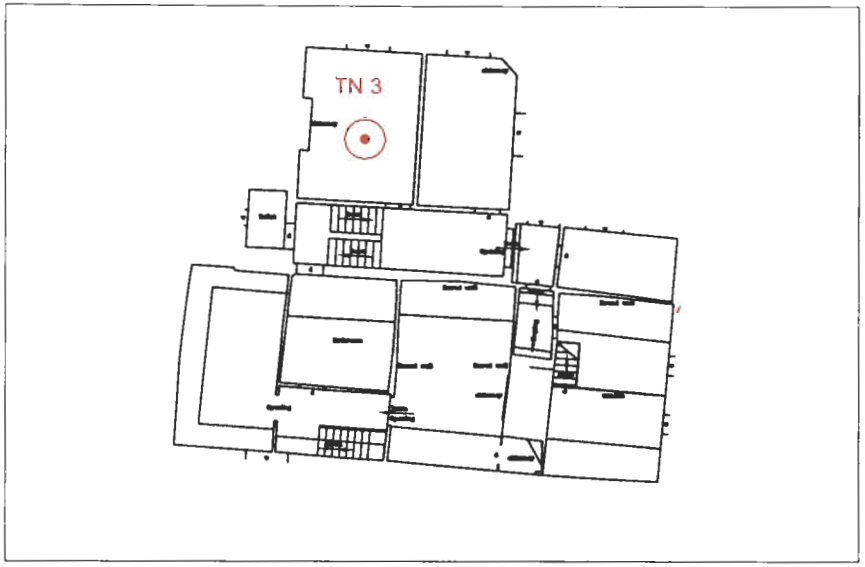

First Floor Plan

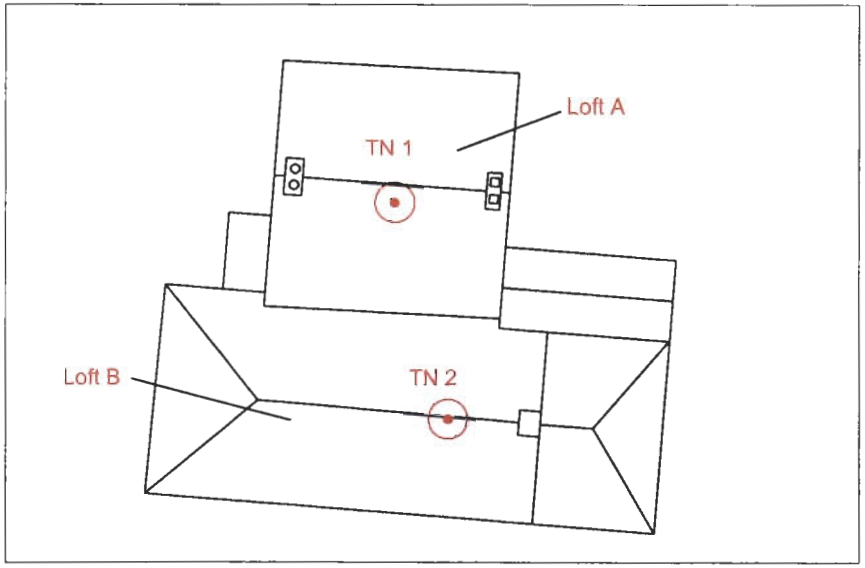

Roof Plan

Key

Target Note

TN 1 Accumulations of bat droppings recorded under the ridge in Loft A.

TN 2 A few scattered bat droppings recorded in Loft B.

TN 3 Bat droppings recorded on and under a lamp shade to a first floor room.

N

Rev.	Details	Drawn / Chkd	Date

Project

103130
Dowd's Farmhouse
Hedge End

Title

Bat Mitigation Plan

AA Environmental LLP
Carriage House Office
Guydens Farm,
Garsington
Oxon
OX44 9AZ

T:(01865) 361866
F:(01865) 361867
info@aae-llp.com
www.aae-llp.com

Scale	Date	Dwg. No.	Rev.
NTS	Nov'10	Figure 1	

Drawn: NAS Chkd: ARB

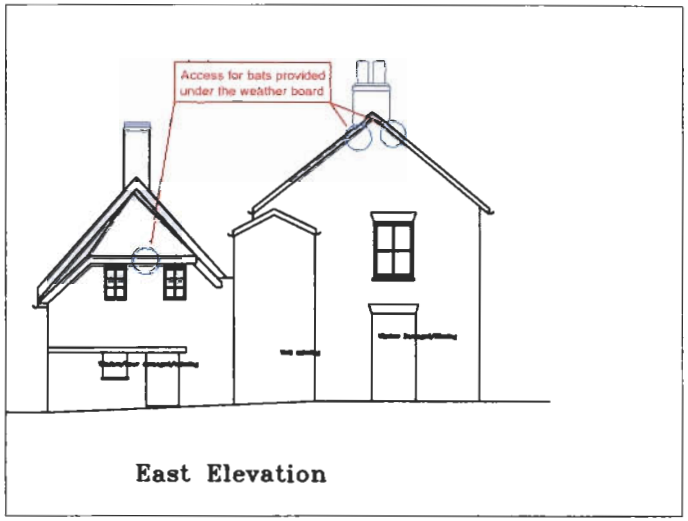

East Elevation

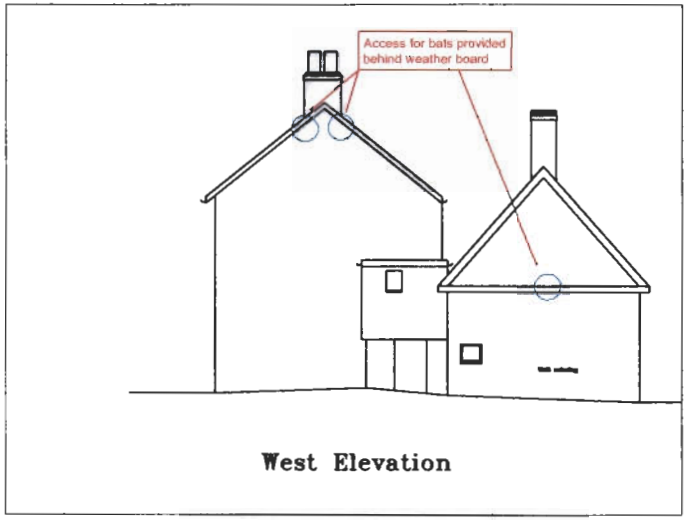

West Elevation

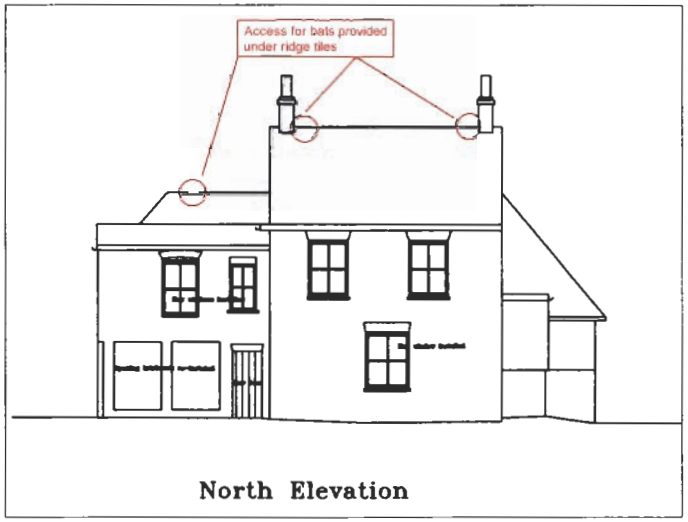

North Elevation

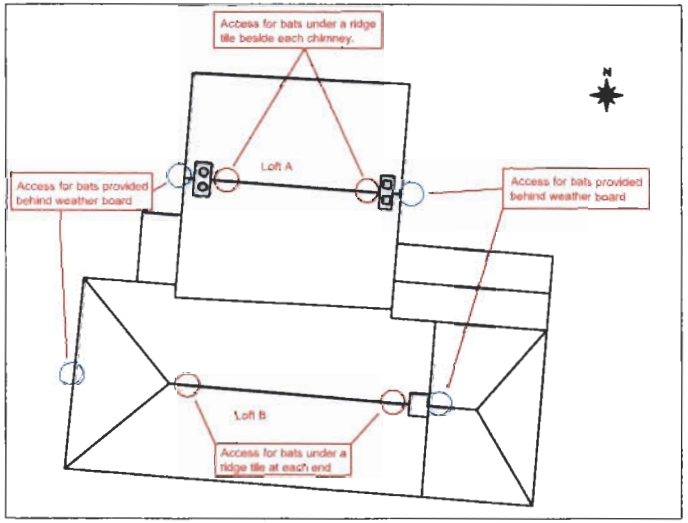

KEY

Bat access point under ridge tile

Bat access point behind weather board

All key stages of the works will be supervised by a licensed bat worker/accredited agent.

Works potentially impacting on bats will be carried out at the least sensitive time (Oct/Nov or March/April).

All recorded bat access points will be maintained, and at a minimum access points, will be provided under two raised ridge tiles and behind the weather boards at each gable end for both lofts.

Bat boxes (wooden plank construction) will be provided in each loft space.

6x Schwegler type 2FN bat boxes will be installed in groups of two on suitable trees located to the east and west of the site.

Bat flightline along the hedgerow to the west of the site will be maintained.

A sensitive lighting scheme will be adopted for the proposals and no lighting will be directed on to bat access points or boxes.

Loft A - Recorded use by bats.
Dimensions: 2.0 m high at ridge (approx.)
7.0 m long (approx.)

Loft B - very limited use by bats.

Rev.	Details	Drawn / Chkd.	Date

Project
103130
Dewd's Farmhouse
Hedge End

Title
Bat Mitigation Plan

AA Environmental LLP
Carriage House Office
Guydens Farm,
Garsington
Oxon
OX44 9AZ
T:(01865) 361859
F:(01865) 361867
info@aae-llp.com
www.aae-llp.com

Scale	Date	Drg. No.	Rev.
NTS	Nov'10	Figure 2	
	Drawn: NAS / Chkd: ARB		