FTT/11/68353

Arboricultural Impact Assessment

&

BS5837 Tree Survey

at

Victoria Cottage
Lowford

for

Foreman Homes Limited

Ben Abbatt
MICFor, MRICS, CEnv, Dip. Arb. (RFS), BA (Hons)
Arboricultural Association Registered Consultant

94 Mount Pleasant Road, Alton, Hants, GU34 2RS

t: 01420 544 860
e: ben@saplingarboriculture.com
w: www.saplingarboriculture.com

17 December 2010

Contents

Title Page

Contents

Instruction
Limitations
Site details
Proposals
Drawings
Legal restrictions
Summary
Findings
Conclusion
Recommendations
References

Appendix 1	Method statement for the protection of trees
Appendix 2	BS5837 Tree Survey Sheet
Appendix 3	Key to BS5837 Tree Survey Sheet
Appendix 4	Photosheet
Appendix 5	Protective Barrier
Appendix 6	Ground Protection
Appendix 7	Construction Exclusion Zone sign
Appendix 8	Arboricultural Monitoring Sheet
Appendix 10	Tree protection plan
Appendix 11	Specification for ground preparation, planting, irrigation and plant maintenance

Conditions of Engagement

01 **Instruction**

To inspect the trees on and adjacent to the site in relation to British Standard 5837:2005 Trees in relation to construction.

To give recommendations to reduce the impact of development on the trees to be retained.

02 **Limitations**

The survey of the trees was of a preliminary nature carried out from ground level. Detailed investigations were not carried out and no tree climbed. The conclusions are based on my own observations, qualifications and experience in arboriculture. All dimensions recorded are estimated. No soil assessments have been undertaken.

03 **Site details**

The site is on the north side of Portsmouth Road, Lowford and has a southern aspect. There is residential housing to the north and east, Portsmouth Road to the south and a motorbike dealership to the west.

04 **Proposals**

The proposal is to demolish the existing building and construct four properties with associated access and parking.

05 **Drawings**

Location and site plan07.031.sk10 by HGP Architects

Drawings and documents have been provided by the client for the purposes of this assessment and associated documents.

06 **Legal restrictions**

No details have been sought from the Local Planning Authority (LPA) on whether the trees on or adjacent to the site are protected by Tree Preservation Order (TPO) or within a Conservation Area. This impact assessment has been carried out to assess which trees are worthy of retention and how the proposed scheme may affect them. Where trees are found to be worthy of retention they are treated as if they are legally protected.

07 **Summary**

There is no significant arboricultural feature within the site worth retaining.

The visual amenity to the locality is provided by trees outside the site to the east and south along Portsmouth Road. These trees to the east and south are sufficiently distant from the site that there will be no significant impact upon them. The landscaping for the site will contribute to this feature aiding the retention and continuity of the landscape in the long term.

08 **Findings**

Please see Appendix 2: BS5837 Tree Survey Sheet for specific details.

08.1 General

The trees (T1, T2, T4, T5 & T6) on the site are either small specimens and do not contribute significantly to the visual amenity of the area or are in poor condition. As such the long term visual amenity would be best served through the planting of appropriate trees to complement the local character of the area thereby aiding the long term retention of the tree feature along Portsmouth Road.

08.2 Trees T1 hazel and T2 holly can both be retained with appropriate tree protection measures (as shown in Appendix 11: Tree protection plan) with additional landscaping and tree planting as part of the soft landscaping.

08.3 Trees T4, T5 and T6 ought to be removed to allow the soft landscaping improvements and replacement tree planting of trees suitable for the site and the relationship with adjacent properties to the north and east.

08.4 Hedge H3 Lawson's cypress stands along the eastern boundary to the site and has been well maintained to c4m height and c1.5m spread. This hedge is to be retained and the maintenance of cutting the sides and top of the hedge should be carried out twice a year (at the start and end of the growing season; April to October)

to previous pruning points to maintain a neat and formal form whilst preventing the general spread of the hedge into the site and onto adjacent land. If maintenance is not carried out this may become an issue for the adjacent landowners to the east.

08.5 This hedge can be retained with appropriate tree protection measures (as shown in Appendix 11: Tree protection plan), although part may need to be cut back further than normal to allow the construction of one of the properties. Scaffolding will not be possible to install between the proposed building and the hedge and therefore the scaffolding will need to be installed on the inside of the building and the construction of the walls implemented from this scaffolding.

08.6 Tree planting on the frontage
There is sufficient space on the frontage of the site for 2 trees small trees and one large tree to be planted and to grow to full maturity. With plot 1 to the north of Portsmouth Road the species choice must take into account the use of the property by planting trees which are less likely to cause a pressure to prune. For instance oak, lime and sycamore can be subject to aphid attack causing honey dew to fall. Therefore species that the local planning authority (LPA) may find acceptable could include, for the large tree with a mature spread of 6m, alder, ash, birch, (Princeton) elm, hornbeam, etc which are less susceptible to aphid attack. These trees are tall growing trees (over 12m high) which are acceptable as the single large growing tree is in the south east corner of the site away from the property and will allow for the reasonable pruning to crown lift the lower branches over time for vehicle movements along Portsmouth Road and within the garden of plot 1. The smaller trees immediately to the south of plot 1 will need to be of a smaller stature to ensure a long term harmonious relationship. Species that may be appropriate for a 3m radius canopy spread can include birch (light density of foliage), Ornamental cherry, Rowan, Whitebeam and may be acceptable to the LPA.

08.7 Due to the garden to plot1 being to the north of Portsmouth Road there is no need for there to be any specific tree pit design and standard tree planting techniques can be used. The garden will need to be protected during construction to avoid the soil from being compacted and tree protection barriers are shown on the Tree Protection Plan.

08.8 Tree planting to the north of the site
The trees planted on the northern and eastern boundary will be to the south and west of adjacent properties and therefore will grow to cast shade for these adjacent gardens. Therefore smaller trees and light density canopies should be preferentially selected to reduce potential concerns from the neighbouring properties. For instance birch (light density of foliage), Ornamental cherry, Rowan, Whitebeam may be acceptable to the LPA.

08.9 Tree planting general
To aid the rapid establishment of the trees and to provide an immediate impression of the future tree landscape, the minimum tree stock size should be 10 to 14cm girth at 1m. Trees of this size may require staking or underground guying to prevent the trees from being blown over or pulled out of the ground.

08.10 Containerised stock is recommended due to the amount of root that remains intact following its growing on inside the pot, the ability to plant throughout the year (subject to irrigation) and the avoidance of girdling roots which is common with container grown stock.

08.11 Additional details of the aftercare is given in Appendix 11 which must be followed if successful establishment is to occur.

08.12 Shade / light and debris issues
There should not be issues of shade or light due to the distance of the buildings from the trees.

08.13 Services
Services should be installed within the access road and outside of the gardens of the proposed properties.

08.14 Site compound
The position of the site compound will need to be outside the protected areas, for instance the central area between the properties.

09 **Conclusion**

The main arboricultural feature to the locality will be unaffected by the proposed development as it is distant from the site.

There are no trees of significance within the site.

The recommended tree planting will add to the character of the area and extend the current tree feature of Portsmouth Road.

The principles and details of the Arboricultural Impact Assessment and Appendix 1: Method Statement must be followed to reduce the impact upon the trees.

10 **Recommendations**

That, following any permission from the LPA, the principles and details of the Arboricultural Impact Assessment and Appendix 1: Method Statement is followed to reduce the potential for harm to the retained trees during development.

Ben Abbatt
MICFor, MRICS, CEnv, Dip. Arb. (RFS), BA (Hons).
Arboricultural Association Registered Consultant

11 **References**

Principles of Tree Hazard Assessment and Management, David Lonsdale, DETR, 1999
The Body Language of Trees, Claus Mattheck & Helge Breloer, DoE, 1994
Diagnosis of ill-health in trees, R.G. Strouts & T.G. Winter, DoE, 1994
Guidance Note 4 Amenity Valuation of trees and woodlands, Arboricultural Association
BS3998: 1989 Recommendations for tree works
BS5837: 2005 Trees in relation to construction – recommendations
NJUG 10 Guidance for the planning, installation and maintenance of utility services in proximity of trees
Arboricultural Practice Note 1 Driveways close to trees

Appendix 1: Method Statement (for protection of trees during development)

01 A pre-commencement meeting prior to the start of any works between the LPA arboriculturalist and site foreman should take place to clarify any additional protection measures required.

An arboriculturalist should be appointed to inspect and monitor the site at the start of the works and on an as required basis throughout the construction works to ensure that the protection procedures are adhered to and to assist with addressing further arboricultural issues that may arise (BS5837 para.9.1.2).

02 Tree works may be required in the interest of good arboricultural practice and to facilitate the use of the site once development is complete. These works are listed in the recommendations of Appendix 2: BS 5837 Tree Survey. All tree works should be carried out according to BS3998: 1989 'Recommendations for tree works' and carried out by an appropriately competent, experienced, qualified and insured arboricultural contractor.

03 The protective barriers, as shown on the drawing "Tree protection plan" and site engineering drawings, should be erected after the tree works and prior to any construction works. Once erected, barriers and ground protection should be considered sacrosanct, and should not be removed or altered without prior recommendation by the developers arboriculturalist and approval of the LPA (BS5837 para.9.1.1)

The protective barriers and ground protection should be erected according to drawings "Tree protection plan" and Appendix 2: BS5837 survey sheet which is based upon the guidelines in BS5837: 2005 'Trees in relation to construction' Table 2 (Appendix 3) and Figure 2 (Appendix 5).

Barriers should be fit for the purpose of excluding construction activity and appropriate to the degree and proximity of work taking place around the retained trees. On all sites, special attention should be paid to ensure that the barriers remain rigid and complete (BS5837 para.9.2.1).

Barriers must consist of a 1.8m high scaffold framework in accordance with Figure 2 (see Appendix 5) comprising a vertical and horizontal framework, well braced to resist impacts, with vertical tubes spaced at a maximum interval of 3m. Onto this, 1.8m high weldmesh panels should be securely fixed with wire or scaffold clamps. Weldmesh panels on rubber or concrete feet are not resistant to impact and should not be used (BS5837 para.9.2.2). If an alternative specification is preferred then it must be agreed in writing with the Local Planning Authority prior to installation.

These barriers shall be identified and marked on the 'Tree protection plan' and all the approved engineering drawings to be used on site.

04 All site personnel should be briefed by the site foreman or the arboriculturalist on the importance of the trees to be retained and the protective measures implemented to aid their retention into the future.

05 Once the construction exclusion zone has been protected by barriers then construction work can commence. All weather notices should be erected on the barriers with words such as "Construction exclusion zone – keep out" (see Appendix 7) (BS5837 para.9.4.1).

06 Care should be taken when planning site operations to ensure that wide or tall loads or plant with booms, jibs and counterweights can operate without coming into contact with retained trees. Such contact can result in serious damage to the equipment and retained trees, and might make the safe retention of the retained trees impossible. Consequently, any transit or transverse of plant in close proximity to trees should be conducted under the supervision of a banksman to ensure that adequate clearance from trees is maintained at all times. In some circumstances it may be impossible to maintain adequate clearance thus requiring tree works to clear the necessary access.

Material which will contaminate the soil, e.g. concrete (dry or mixed), diesel, oil, vehicle washings, etc. should not be discharged within 10m of the stem. It is essential that an allowance should be made for the slope of the ground so that damaging materials such as concrete washings, mortar, diesel or oil cannot run towards the trees.

There should be no fires on the site.

Notice boards, telephone cables or other services should not be attached to any part of the tree.

07 The advice of the appointed arboriculturalist should be sought where underground structures present within the RPA are / will become redundant. In general it is preferable to seal these off as this avoids the need for significant excavation (BS5837 para.11.2.6).

08 Any excavations in proximity to the RPA of retained trees will require certain precautions to avoid unnecessary damage to trees to be retained, and should be undertaken as follows:

All excavations within the RPA should be carried out carefully by hand, avoiding damage to the protective bark covering larger roots. Roots, whilst exposed, should be wrapped in dry, clean hessian sacking to prevent desiccation (drying) and to protect from temperature changes.

Roots smaller than 25mm diameter may be pruned back, preferably to a side branch, using a proprietary clean cutting tool such as bypass secateurs or handsaw.

Roots larger than 25mm diameter should only be severed following consultation with the appointed arboriculturalist, as the roots may be essential to the tree's health and stability.

Prior to backfilling, any hessian wrapping should be removed and retained roots should be surrounded by sharp sand (builder's sand should not be used because of its high salt content which is toxic to tree roots), or other loose granular fill, before soil or other material is replaced. This material, e.g. general purpose grade topsoil to BS3882: 1994 Specification for topsoil as per paragraph 4b, should be free of contaminants and other foreign objects potentially injurious to tree roots (BS5837 para.11.3.5).

Further details are available in NJUG Volume 4 "Guidance for the planning, installation and maintenance of utility services in proximity of trees".

09 All new services are to be outside the RPA of retained trees.

10 There should be no changes in grade within the RPA without prior recommendation by the appointed arboriculturalist and approval of the LPA.

11 Following completion of the construction and hard landscaping works a site meeting between the LPA arboriculturalist and site foreman should take place to assess whether the protective barriers and ground protection can be removed to allow soft landscaping works.

12 Following the completion of the soft landscaping works a tree survey should be undertaken to identify whether additional tree works are required for the safe use of the site and adjacent land users (BS5837 para.15.1.1 & 15.1.3).

Method Statement Summary / Timing of operations

01	Pre-commencement meeting prior to construction works to discuss the tree protection measures.	
02	Tree works to facilitate demolition and construction.	
03	Tree protective barriers to facilitate demolition and construction works.	
04	Tree protection measures to be signed off by either the LPA Arboricultural Officer or the Appointed Arboriculturalist.	
05	Demolition, main construction and hard landscaping works.	
06	Inspection by the LPA Arboriculturalist to agree the removal of the tree protection measures to allow the soft landscaping works.	
07	Soft landscaping works	
08	Tree survey for remedial works	
09	Remedial tree works	
10	Occupancy	

Appendix 2 BS5837 tree survey

No	Species	Legal	Height (m)	Stem Ø (mm)	Branch spread (m)		Height of crown (m)		Age class	ERC (years)	Category grading	RPA	Future height (m)	Future branch spread Ø (m)
T1	Hazel	~	5	300 Multiple stems Estimated	N	3	N	-	Mature	>20	C	Radius (m) 3.0 Area (m^2) 28	>8	>8
					E	3	E	-						
					S	3	S	-						
					W	3	W	-						
Condition					**Preliminary management recommendations**						**Works required for development / construction**			
Good					No works required.						No works required.			

No	Species	Legal	Height (m)	Stem Ø (mm)	Branch spread (m)		Height of crown (m)		Age class	ERC (years)	Category grading	RPA	Future height (m)	Future branch spread Ø (m)
T2	Holly	~	4	150 Estimated	N	2	N	-	Young	>20	C	Radius (m) 1.8 Area (m^2) 10	>8	>8
					E	2	E	-						
					S	2	S	-						
					W	2	W	-						
Condition					**Preliminary management recommendations**						**Works required for development / construction**			
Good					No works required.						No works required.			

No	Species	Legal	Height (m)	Stem Ø (mm)	Branch spread (m)		Height of crown (m)		Age class	ERC (years)	Category grading	RPA	Future height (m)	Future branch spread Ø (m)
H3	Hedge / Lawson Cypress	~	4	150 Estimated	N	1	N	-	Middle Aged	>20	C	Radius (m) 1.8 Area (m^2) 10	>20	>8
					E	1	E	-						
					S	1	S	-						
					W	1	W	-						
Condition					**Preliminary management recommendations**						**Works required for development / construction**			
Good					Continue current management of pruning twice a year.						No works required.			

No	Species	Legal	Height (m)	Stem Ø (mm)	Branch spread (m)		Height of crown (m)		Age class	ERC (years)	Category grading	RPA	Future height (m)	Future branch spread Ø (m)
T4	Willow	~	5	485	N	3	N	1				Radius (m) 4.0 Area (m^2) 50	>8	>8
					E	3	E	1						
					S	3	S	1						
					W	3	W	1						
Condition					**Preliminary management recommendations**						**Works required for development / construction**			
Fair Two stems from 1.5m. Ivy on main stem. Short form.					No works required.						Fell, treat stump and grind out in 1months time. Reason: to allow improved landscaping for the site.			

No	Species	Legal	Height (m)	Stem Ø (mm)	Branch spread (m)		Height of crown (m)		Age class	ERC (years)	Category grading	RPA	Future height (m)	Future branch spread Ø (m)
T5	Hazel	~	5	300 Multiple stems Estimated	N	3	N	-	Mature	>20	C	Radius (m) 3.0	>8	>8
					E	3	E	-						
					S	3	S	-				Area (m^2)		
					W	3	W	-				28		
Condition					**Preliminary management recommendations**						**Works required for development / construction**			
Good					No works required.						Fell and grind stump. Reason: to allow improved landscaping for the site.			

No	Species	Legal	Height (m)	Stem Ø (mm)	Branch spread (m)		Height of crown (m)		Age class	ERC (years)	Category grading	RPA	Future height (m)	Future branch spread Ø (m)
T6	Cherry	~	5	150 Estimated	N	1	N	1	Young	>20	C	Radius (m) 1.8	>15	>10
					E	1	E	1						
					S	1	S	1				Area (m^2)		
					W	1	W	1				10		
Condition					**Preliminary management recommendations**						**Works required for development / construction**			
Good					No works required.						Fell and grind stump. Reason: to allow improved landscaping for the site.			

General notes

Site inspected 31st March 2010.

I have not checked whether the site is within a Conservation Area or whether the trees are under Tree Preservation Order (TPO). Prior to any tree works confirmation of whether these legal restrictions apply to the site or trees ought to be sought from the Local Planning Authority (LPA).

If the trees stand within a Conservation Area designated under the Town and Country Planning Act the LPA will normally require 6 weeks notice of intention to carry out any tree works as detailed in the survey.

If the trees are under TPO then the LPA will normally require an application for any tree works. Some tree works are exempt, for instance if the trees are dead, dying or dangerous, and certain works can be carried out without application. It is prudent to give the LPA at least five days notice prior to carrying out any of these tree works under these exemptions. This survey, with recommendations, can be used to support any such application or notice.

Wildlife issues are of significant concern to the general public. A balance has to be found between the protection of wildlife and the need for safety when managing trees. The Wildlife and Countryside Act (1980) and Countryside Rights of Way Act (2000) give statutory protection to wild birds, bats, mammals, some invertebrates and plants. It is important to ensure that this legislation is properly considered when carrying out any works to trees.

Bird nests were not identified whilst on site. However, any Arborist carrying out the tree works should ensure that there is no disturbance to nesting birds prior to the works being carried out. Further guidance upon the appropriate timing of the works can be sought from DEFRA, if necessary.

In this instance, considering the size of the trees, their location and features I believe that there is a low to medium probability of bats using the mature trees as a roost site. A bat survey prior to tree works is not recommended as it would be difficult to determine the location of any exit point from the roost within the tree by a bat survey and also confusion may also arise from bats travelling from other roosts. Any such exit could more easily identified by a competent tree worker. During the tree works the contractor should carry out the tree works with bats as an active consideration and follow the current industry best practice, e.g. Arboricultural Association Guidance Note 1 Trees and Bats 2003, which a competent tree contractor should be familiar with.

Typical significant defects that are to be identified can be referred to in "Hazards from Trees, a general guide", "Principles of tree hazard assessment and management" both by David Lonsdale and "The body language of trees" by Claus Mattheck published by the Forestry Commission and the Department of the Environment respectively.

Trees are dynamic structures and as such their condition and health may change in a short period of time, particularly in relation to changes in their immediate environment and circumstances. As such the inspection is valid for a period of 1 year from the date of the survey providing the environment and circumstances do not significantly alter.

Appendix 3 Key to BS5837 tree survey

No	Tree number.
Species	Species of tree.
Legal	**TPO** Tree Preservation Order. **CA** Conservation Area. **U** Unknown. **N** No Tree Preservation Order or Conservation Area.
Height	Height measured in metres.
Stem ∅	Stem diameter at 1.5metres following normal Forestry conventions or immediately above the root flare for multiple stemmed trees, in millimetres.
abf	Above basal or root flare.
Branch Spread	Branch spread in metres taken at the four cardinal points to derive an accurate representation of the crown.
Height of crown	Height in metres of crown clearance above adjacent ground level.
Age Class (Age)	**Y** Young (i.e. a tree in the first third of its lifespan). **Mi** Middle aged (i.e. a tree in the second third of its lifespan). **Ma** Mature (i.e. a tree in the final third of its lifespan). **Ov** Over mature (i.e. a tree in the final third of its lifespan that is showing symptoms of decline). **V** Veteran (i.e. a tree that is mature, provides visual and ecological amenity and of considerable age for a tree of its species).
Condition (Physiological and Structural)	**Good** • Full healthy canopy; but possibly including some suppressed branches or physical damage. A tree that requires little or no tree works and it is anticipated to be retained for over 10 years. **Fair** • Slightly reduced leaf cover, minor dead wood, or isolated major deadwood. A tree that requires tree works to remove defects and/or improve the form so that it may be anticipated to be retained for over 5 years. **Poor** • Overall sparse leafing or extensive dead wood. A tree that has a significant proportion of defects and/or requires considerable tree works to aid its retention and/or where the retention of the tree is not anticipated beyond 5 years. **Very poor** • Large areas of crown dead. A tree that has a significant proportion of defects and/or requires considerable tree works to aid its retention.
Preliminary management recommendations	As per BS3998: 1989 Recommendations for Tree Works.
Estimated remaining contribution	Estimated remaining contribution in years (e.g. less than 10, 10-20, 20-40, more than 40).
Category grading	See below Table 1.
Root protection area	See below Table 2.
Future height	Estimated **future height** of the tree at maturity. Measured in meters (m).
Future branch spread	Estimated **future branch spread** of the tree at maturity. Measured in meters (m).
OI	Over ivy
INAC	Inaccessible
LS	Land survey, i.e. data provided by the land survey.
	All measurements are approximate.

Table 1 - Cascade chart for tree quality assessment, BS5837: 2005 Trees in relation to construction - Recommendations

TREES FOR REMOVAL				
CATEGORY AND DEFINITIONS	CRITERIA			IDENTIFICATION ON PLAN
Category R Those in such condition that any existing value would be lost within 10 years and which should, in the current context, be removed for reasons of sound arboricultural management.	• Trees that have a serious, irremediable, structural defect, such as that their early loss is expected due to collapse, including those that will become unviable after removal of other R category trees (i.e. where, for whatever reason, the loss of companion shelter cannot be mitigated by pruning). • Trees that are dead or are showing signs of significant, immediate, and irreversible overall decline. • Trees infected with pathogens of significance to the health and / or safety of other trees nearby (e.g. Dutch elm disease) or very low quality trees suppressing adjacent trees of better quality. NOTE Habitat reinstatement may be appropriate (e.g. R category tree used as a bat roost: installation of bat box in nearby tree).			RED
TREES TO BE CONSIDERED FOR RETENTION				
Category and definitions	Criteria – Subcategories			Identification on plan
	1 Mainly arboricultural values	2 Mainly landscape values	3 Mainly cultural values, including conservation	
Category A Those of high quality and value: in such a condition as to be able to make a substantial contribution (a minimum of 40 years is suggested)	Trees that are particularly good examples of their species, especially if rare or unusual, or essential components of groups, or of formal or semi-formal arboricultural features (e.g. the dominant and / or principal trees within an avenue).	Trees, groups or woodlands which provide a definite screening or softening effect to the locality in relation to views into or out of the site, or those of particular visual importance (e.g. avenues or other arboricultural features assessed as groups).	Trees, groups or woodlands of significant conservation, historical, commemorative or other value (e.g. veteran trees or wood-pasture).	LIGHT GREEN
Category B Those of moderate quality and value: those in such a condition to make a significant contribution (a minimum of 20 years is suggested)	Trees that might be included in the high category, but are downgraded because of impaired condition (e.g. presence of remediable defects including unsympathetic past management and minor storm damage).	Trees present in numbers, usually as groups or woodlands, such that they form distinct landscape features, thereby attracting a higher collective rating than they might as individuals but which are not, individually, essential components of a formal or semi-formal arboricultural features (e.g. trees of moderate quality within an avenue that includes better, A category specimens), or trees situated mainly internally to the site, therefore individually having little visual impact on the wider locality.	Trees with clearly identifiable conservation or other cultural benefits	MID BLUE
Category C Those of low quality and value: currently in adequate condition to remainuntil new planting could be established (a minimum of 10 years is suggested), or young trees with a stem diameter below 150mm.	Trees not qualifying in higher categories.	Trees present in groups or woodlands, but without this conferring on them significantly greater landscape value, and / or trees offering low or only temporary screening benefit.	Trees with very limited conservation or other cultural benefits	GREY .
	NOTE: Whilst C category trees will usually not be retained where they would impose a significant constraint on development, young trees with a stem diameter of less than 150mm should be considered for relocation.			

Table 2 - Calculating the Root Protection Area (RPA), BS5837: 2005 Trees in relation to construction - Recommendations

Number of stems	Calculation
Single stem tree	RPA(m2) = ((stem diameter(mm) at 1.5m x 12) / 1000)2 x3.142
Tree with more than one stem arising below 1.5m above ground level	RPA(m2) = ((Basal diameter(measured immediately above root flare)(mm) x 10) / 1000) x 3.142
NOTE The 12 x multiplier is based upon NJUG 10 [9] and published works by Metheny and Clark [10].	

5.2.3 The calculated RPA should be capped to 707m2, e.g. which is equivalent to a circle with a radius of 15m or a square with approximately 26m sides.

5.2.4 The RPA, for each tree as determined in Table 2, should be plotted on the TCP taking full account of the following factors, as assessed by an arboriculturalist, which may change its shape but not its area whilst still providing adequate protection for the root system.

a) The likely tolerance of the tree to root disturbance, based on factors such as species, age and condition and presence of other trees. (For individual open grown trees only, it may be acceptable to offset the distance by up to 20% in one direction.) (See Note 1 of 11.3.5)

b) The morphology and disposition of the roots, when know to be influenced by past or existing site conditions (e.g. presence of roads, structures and underground services).

c) The soil type and structure.

d) Topography and drainage.

e) Where any significant part of a tree's crown overhangs the provisional position of tree protection barriers, these parts may sustain damage during the construction period. In such cases, it may be necessary to increase the extent of tree protection barriers to contain and thereby protect the spread of the crown. Protection may also be achieved by access facilitation pruning (see11.2.1). The need for such measures, including the precise extent of pruning, should be assessed by an arboriculturalist.

Appendix 4: Photosheet



1. T1 hazel adjacent to Portsmouth Road.



2. T2 holly to centre with H3 hedge in background to right.



3. End of H3 to right, T4 willow in the centre, T5 hazel to the left.



4. T6 Cherry on boundary to the north.

Appendix 5: Protective Barriers

Appendix 5: Tree protective barriers, BS5837:2005 Trees in relation to construction

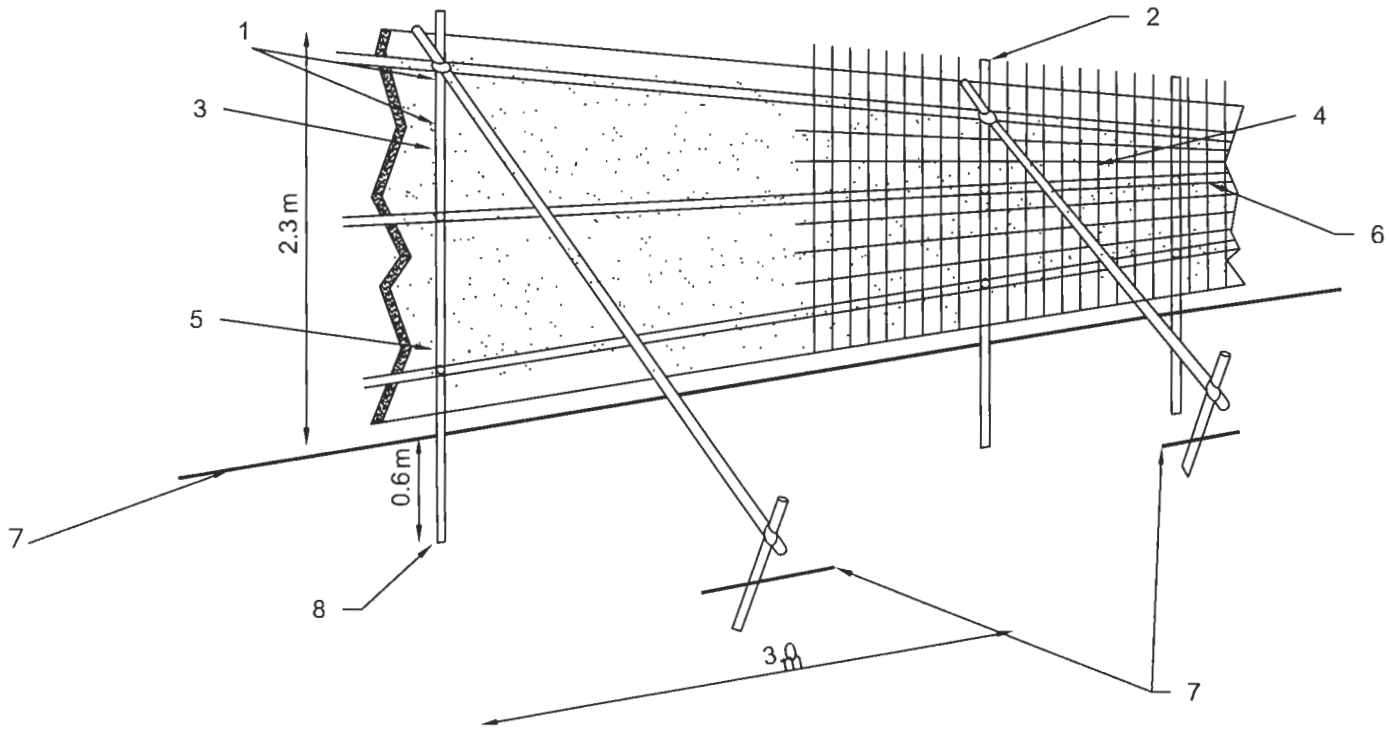

1. Standard scaffold poles
2. Uprights to be driven into the ground
3. Panels secured to uprights with wire ties and where necessary standard scaffold poles
4. Weldmesh wired to the uprights and horizontals
5. Standard clamps
6. Wire twisted and secured on inside face of fencing to avoid easy dismantling
7. Ground level
8. Approx. 0.6m driven into the ground



This drawing is copyright of Sapling Arboriculture Limited and may not be copied, altered or reproduced in any way without written authority from Sapling Arboriculture Limited.

sapling
arboriculture ltd
registered in england: 5414238

T: 01420 544 860
E: ben@saplingarboriculture.com
W: www.saplingarboriculture.com

Ben Abbatt
MICFor, MRICS, CEnv, Dip. Arb. (RFS), BA (Hons)
Arboricultural Association Registered Consultant

Appendix 6: Ground Protection

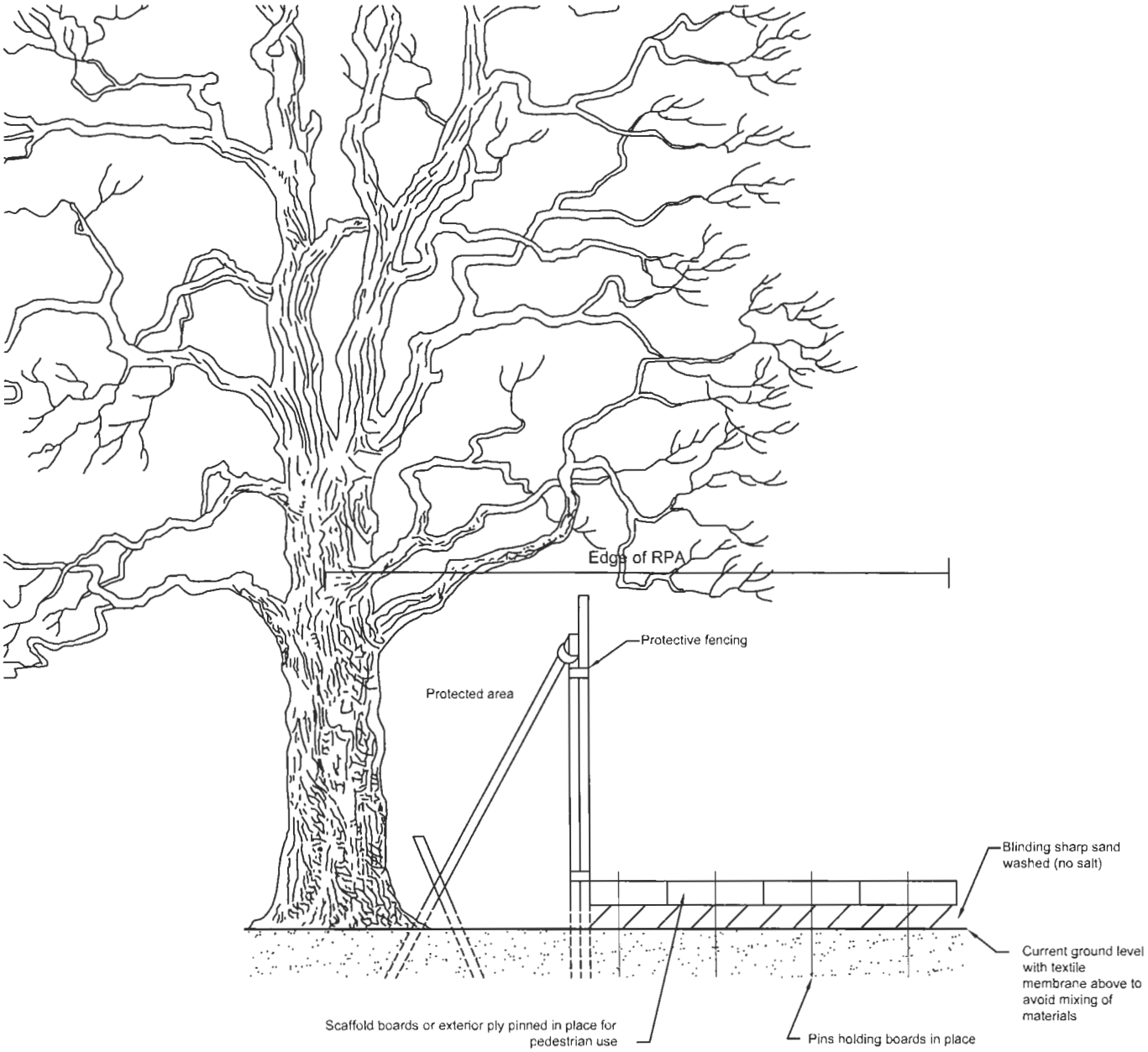

Appendix 6: Scaffolding within RPA, BS5837:2005 Trees in relation to construction

Pedestrian ground protection

Drawing title:

Appendix 6: Ground protection within Root Protection Area (RPA)

Drawing reference:

Revision: -

Date: October 2010

Scale:

Sheet: 1 of 1

This drawing is copyright of Sapling Arboriculture Limited and may not be copied, altered or reproduced in any way without written authority from Sapling Arboriculture Limited.

sapling
arboriculture ltd
registered in england: 5414238
T. 01420 544 860
E. ben@saplingarboriculture.com
W. www.saplingarboriculture.com

Ben Abbatt
MICFor, MRICS, CEnv, Dip. Arb. (RFS), BA (Hons)
Arboricultural Association Registered Consultant

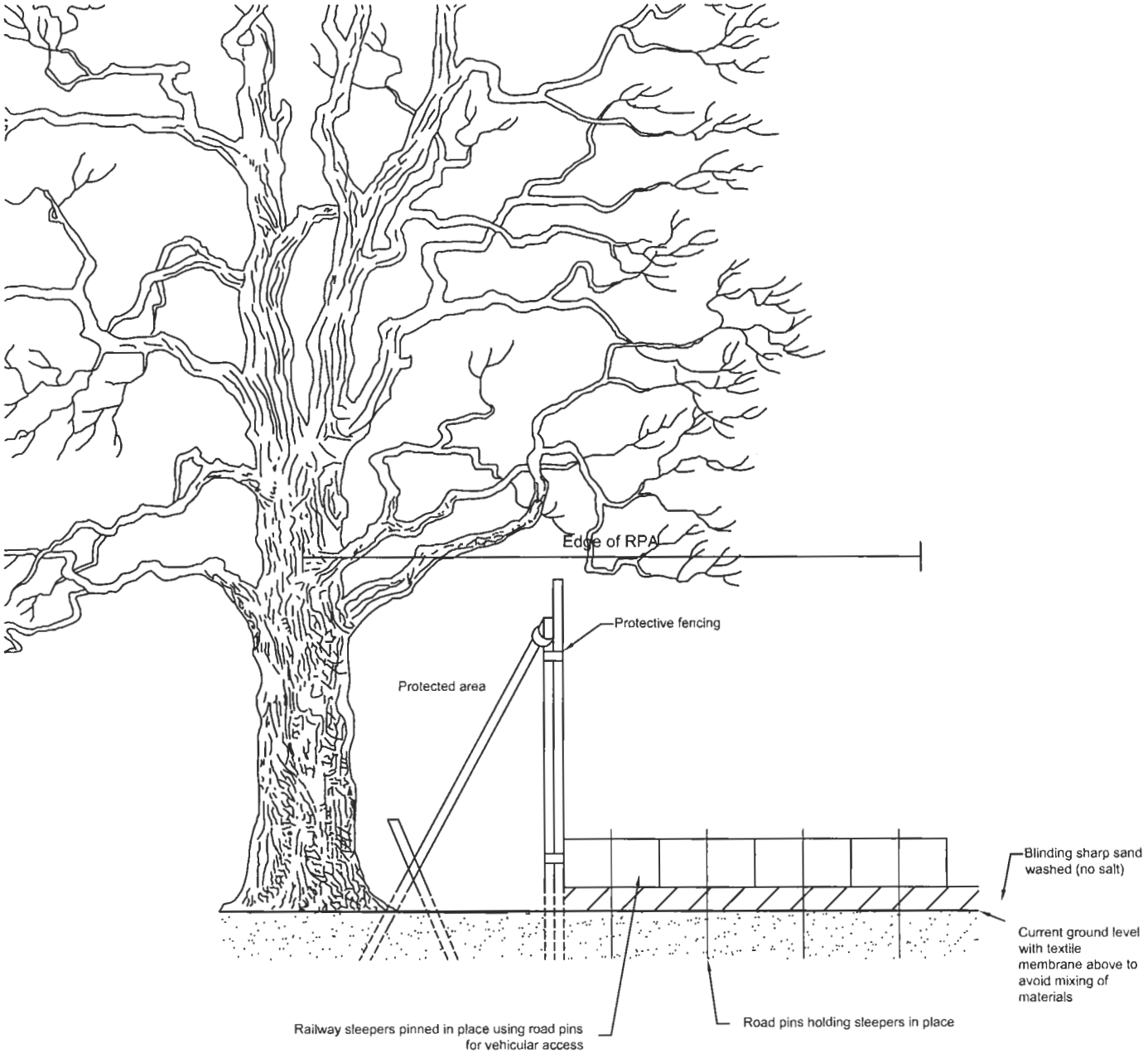

Appendix 6: Scaffolding within RPA, BS5837:2005 Trees in relation to construction
Vehicular Ground Protection

Drawing title:

Appendix 6: Ground protection within Root Protection Area (RPA)

Drawing reference:

Revision: -

Date: October 2010

Scale:

Sheet: 1 of 1

This drawing is copyright of Sapling Arboriculture Limited and may not be copied, altered or reproduced in any way without written authority from Sapling Arboriculture Limited.

sapling
arboriculture ltd
registered in england no: 5414298
T: 01420 544 860
E: ben@saplingarboriculture.com
W: www.saplingarboriculture.com
Ben Abbatt
MICFor, MRICS, CEnv, Dip. Arb. (RFS), BA (Hons)
Arboricultural Association Registered Consultant.

Appendix 7: Construction exclusion zone sign

CONSTRUCTION EXCLUSION ZONE

KEEP OUT!

THE FOLLOWING MUST BE OBSERVED BY ALL PERSONS:

- **THE PROTECTIVE FENCING MUST NOT BE MOVED**
- **NO PERSON SHALL ENTER THE PROTECTED AREA**
- **NO MACHINE OR PLANT SHALL ENTER THE PROTECTED AREA**
- **NO MATERIALS SHALL BE STORED IN THE PROTECTED AREA**
- **NO SPOIL SHALL BE DEPOSITED IN THE PROTECTED AREA**
- **NO EXCAVATION SHALL OCCUR IN THE PROTECTED AREA**

ANY ACCESS INTO THE PROTECTED AREA MUST BE WITH THE WRITTEN PERMISSION OF THE LOCAL PLANNING AUTHORITY

A3 sign on laminated all weather material at 1.8m on the protective fencing every 10m.

Appendix 8: Monitoring Sheet

Client:	
Site:	
Inspector:	
Date:	
Weather:	

	Yes	No	Comments
Has the protective fencing been installed?			
Are the TPZ signs in place?			
Has the protective fencing been moved?			
Has there been any works carried out or storage of materials within the TPZ?			
Is the any new visible damage to the trees?			
Has the condition of the trees significantly altered since the previous inspection?			
Are there any scheduled works within the TPZ?			
Have these works within the TPZ been agreed in writing with the LPA?			
Is the ground protection sufficient?			
Are there any additional measures required to aid the retention of the trees?			

Notes

Appendix 10: Tree Protection Plan



General / Key:

Root protection area	
Indicative canopy	
Barrier fencing	
Ground protection	
Special surface	
A Class	
B Class	
C Class	
R Class	

Site:

Victoria Cottage

Data:

Foreman Homes Limited / HGP Architects

This drawing is copyright of Sapling Arboriculture Limited and may not be copied, altered or reproduced in any way without written authority from Sapling Arboriculture Limited.

Drawing title:

Tree protection plan

Drawing reference: J327/02

Revision: -

Date: December 2010

Scale: 1/500 on A4

Sheet: 1 of 1

sapling
arboriculture ltd
registered in england: 5414238

T: 01420 544 860
E: ben@saplingarboriculture.com
W: www.saplingarboriculture.com

Ben Abbatt
MICFor, MRICS, CEnv, Dip. Arb. (RFS), BA (Hons)
Arboricultural Association Registered Consultant

Appendix 11: Specification for ground preparation, planting, irrigation and plant maintenance.

Ground preparation:

- The tree pit to be checked for services using a Cable Avoidance Tool prior to any excavation.
- Tree pit to be wide and deep enough to ensure a sufficient tree pit for planting, usually at least 200mm wider than the root ball.
- Where feasible, tree pit to be 'dish shaped' to aid rapid root colonisation.
- The bottom and edges of the tree pit to be broken up to allow rapid colonisation of the immediately surrounding soil to aid establishment.

Planting:

- Tree to be set upright and at the same depth as grown with the root collar being at finished soil level.
- Tree to be secured and supported by an underground guying system (Platipus tree anchor system, 'dead-mans' anchor or similar).
- Stakes or guard to be installed at suitable distance from the tree to prevent rubbing against the tree and to provide the support necessary and to a suitable depth.
- Irrigation tubes (Greenleaf Root Rain Civic or similar) will be installed prior to backfilling at 200mm below finished surface level.
- The soil to be used as backfill will be to BS3882 Specification for Topsoil paragraph 4b general purpose grade.
- Backfilling will be placed around the roots and root-ball built up in layers approximately 30cm deep and walked over to firm the soil before the next layer is added.
- Trees to be watered in with 100l of water.
- Guards to be installed at finished ground level with the guard sufficiently distant from the tree to avoid damage and allow for incremental growth.

Irrigation

- To be carried out in the first year following planting on a bi-weekly basis between May through to September for 12 occasions.
- In the second year monthly watering between May through to September for 6 occasions
- Amount of water to be 100 litres per plant on each occasion.
- Water to be into the irrigation tubes provided.
- Watering does not include runoff, but should be to the root-ball via the irrigation tube. If necessary a pause to allow the water to percolate into the soil may be necessary before adding further water in to the irrigation tube.

Plant maintenance:

- Area within 0.5m of the base of the tree to be kept weed free using herbicide (normally Glyphosate) in Spring and Summer (two applications per year).
- Area within 0.5m of the base of the tree to be mulch with bark to a settled depth of 75mm. To be topped up twice a year in spring and summer (two visits per year).
- Checking and adjustment of tree and stake ties as appropriate.

CONDITIONS OF ENGAGEMENT

1. Interpretation
'*Client*' means the person named on the Quotation for whom the Contractor has agreed to provide Specified Services in accordance with these terms.

'*Contract*' means the Contract for the provision of the Specified Services.

'*Contractor*' means Sapling Arboriculture Ltd.

'*Quotation*' means the Quotation to which these Terms and Conditions apply.

'*Specified Services*' means the service to be provided by the Contractor to the Client, as referred to in the Quotation.

2. The responsibilities of the Contractor
2.1 The Contractor shall provide the Specified Services to the Client as set out in the Quotation.

2.2 Timescales for the Specified Services will be agreed with the Client and adhered to as far as is reasonable. In instances where information received is out of date, inaccurate or if scheme design changes, it may not be possible to adhere to the agreed timescale.

2.3 The Contractor shall provide his opinion on those matters in respect of which he has given the Client express written confirmation and subject to the limitations and conditions stated. The Contractor will not purport to express an opinion about or advise upon the condition of un-inspected parts of the land or trees and should not be taken as making any implied representation or statements about such parts.

2.4 The Contractor will only provide advice on matters within his arboricultural experience and qualifications.

3. The responsibilities of the Client
3.1 The Client shall provide the Contractor with accurate and up to date information as requested by the Contractor in a timely manner and in the format requested.

3.2 The Client shall notify the Contractor in writing of any changes to the Specified Services brief in the Quotation, scheme design or works instructions.

3.3 If a report suggests further investigation works be carried out by a specialist firm or person (e.g. Structural Engineer, Surveyor) the Client is responsible for sourcing such services and information. On no account will liability be accepted by the Contractor in respect of such matters nor if the client proceeds or acts without obtaining and acting upon the relevant further advice.

4. Assumptions
4.1 that the land, which is the subject of the inspection or survey, is not subject to any unusual or especially onerous restrictions, encumbrances or outgoings and that good title can be shown;

4.2 that the land and its value are unaffected by any matters which might be revealed by a local land search or replies to conveyancing enquiries or by any statutory notice and that neither the land nor its condition nor its uses nor its intended uses is, or will be unlawful or contrary to planning or building regulations;

4.3 that inspection of those parts of the land or soil strata or any tree which have not been inspected would neither reveal material defects nor cause the Contractor to alter his opinion materially;

4.4 that there are no underground pipes, wires, cables or others services or installations which might be damaged as a result of work recommended or necessary; and

4.5 that no tree is subject to legislation relating to Conservation Areas, Tree Preservation Order or terms of a planning consent, in relation to which the Client must make his own enquiries of the Local Planning Authority.

5. Charges

5.1 The Client shall pay the Contractor its fee regardless of any outcome as well as reimbursing the

cost of all reasonable outof pocket expenses incurred.

5.2 Payment in full (including VAT) must be paid within 14 days of the date of the invoice.

5.3 No discount nor retention or set off against the amount due is allowed unless previously agreed by the Contractor in writing.

5.4 The Contractor reserves the right to charge interest on any monies which are not received within 14 days. In accordance with the Late Payment of Commercial Debts (Interest) Act 1998 the Contractor will be entitled to charge interest (both before and after any judgement of the amount unpaid) at the rate of 10% per month over the Bank of England base rate until payment in full is made (part of the month shall be treated as a full month for the purpose of charging interest).

5.5 All unpaid accounts will be referred to the County Courts. Sapling Arboriculture Ltd reserves the right to claim compensation in respect of debt recovery costs.

5.6 Sapling Arboriculture Ltd reserves the right to withhold the release of reports and other Specified Services until payment is received in full.

6. Contractor liability

6.1 Any report is provided for the sole use of the named client and is confidential to the client and his professional advisors. The Contractor accepts responsibility to the Client alone for the stated purposes of the report, which will be prepared with the skill, care and diligence reasonably expected of a competent Arboricultural Consultant, but no responsibility whatsoever is accepted to any person other than the client himself. Any other such person relying on the report does so at his own risk. Neither the whole nor any part of the report or any reference thereto may be included in any published document, circular or statement nor may it be published in any way without the Contractor's prior written approval of the form and context in which it may appear. Liability is limited to the amount that the Contractor is insured to. Intellectual Property Rights shall remain in the ownership of the Contractor.

6.2 The Contractor shall not be held liable to the Client or deemed to be in breach of the Contract by reason of any delay in performing, or failing to perform any of the Contractor's obligations in respect of the Specified Services, if the delay or failure was beyond the Contractor's control.

6.3 (i) Subject as expressly provided in these conditions, and except where the client is sold to a person dealing as a consumer (within the meaning of the Unfair Contract Terms Act 1977) all warranties, conditions or other terms implied by the statute or common law are excluded to the fullest extent permitted by law.

(ii) Any claim by which the client is based on any defect in the nature or quality of the Company's services shall be notified to the Company within 7 days from the date of supply.

(iii) Except in respect of death or personal injury caused by the Company's negligence, the Company shall not be liable to the client by reason of any representation, or implied warranty, condition or other term, or any duty at common law, or under the express terms of any contract, for any consequential loss or damage (and whether caused by the negligence of the Company, his employees or agents or otherwise) which arise out of or in connection with the Contractor's services, except as expressly provided in these conditions.

7. Miscellaneous

7.1 Quotations are valid for 28 days from the date of the quotation.

7.2 Any dispute arising out of or in connection with the contract between the client and the Company shall be referred to the arbitration or a single arbitrator appointed by agreement between the parties or, in default of agreement, nominated on the application of either party to the Arboricultural Association.

7.3 The Contractor reserves the right to refuse work(s) if a conflict of interest is identified or arises.

7.4 The report is valid for a period of one year from the date on the report.

7.5 Each provision of these conditions limiting or excluding liability operates separately in itself and survives independently of the others.

7.6 The Contract between the Client and the Contractor shall be governed by the laws of England.