F/10/67913.

DESIGN & ACCESS STATEMENT
CHANGE OF USE A1-A5. SANDWICH BAR TO HOT FOOD INDIAN TAKE AWAY

8 NIGHTINGALE AVENUE. EASTLEIGH.

This existing ground floor premises situated in a small block of similar shop units with two floors of living accommodation over, is presently trading as a sandwich bar with A1 usage. The proposal is to change to an Indian hot food take away, A5 usage.

PROPOSALS.

The original shop layout is to be basically unchanged with the existing entrance opening into the waiting and service area . The rear section is to have a new kitchen fitted, with oven range and 3m cooker hood over. A new screen partition will divide the washing up area from the new preparation section and will incorporate a storage cupboard. The disused area adjacent to the wc is to be exposed to house a full height fridge/ freezer with the hand basin being relocated. The existing wc facilities are to remain with mechanical ventilation fitted.

EXTRACTION SYSTEM.

The new 3m stainless steel cooker hood discharges into 500 x 300 trunking and is taken through the fanlight section of the existing rear window, the concrete roof slab prohibiting the trunking from taking the more direct route vertically. The new carbon filtration box and centrifugal fan on anti vibration mountings are located on this flat roof area. 400 x 400 trunking is to be taken up the external wall terminating with a high velocity cowl which will project odours above ridge level. The unrestrained section of ducting above eaves level is designated as 3m any greater height is likely to be unstable due to lack of anchor points. In accordance with the similar extraction system to the Chinese take away unit in the same block, the ducting is to be sprayed to blend with the surrounding brickwork.

REFUSE.

As with the other units a Euro bin is situated on the pavement area to the rear with the access road providing the collection point. A receptacle is to be provided internally in the waiting area for associated throw away refuse.

ACCESS.

There is substantial free parking to the front of this retail block with direct access from Nightingale Avenue for customers and rear access for deliveries. The existing entrance, which is to remain, has a minimal threshold and complies with disabled access requirements. The internal arrangement allows for wheelchair manoevreability.

JUSTIFICATION.

The available choice of food from take aways in this area is limited and an Indian food facility is likely to be a welcome addition to the local community.
Associated problems with take aways where adjacent living accommodation is concerned, i.e. cooking odours and noise, have been addressed and full details of extraction filtration and mountings have been included in this statement. Opening hours, as can be seen in the application are proposed only until 10.30 pm Sunday to Thursday and 11.00pm Friday and Saturday.
The proposed extraction system is similar to that approved for the Chinese take away in the same block and is to be finished to match.

Carbon Filter Construction and Specification

Dwell time

The time that the air is in contact with the carbon as it passes through the carbon bed. This is normally 0.1 seconds for general air conditioning applications and is increased as the concentration of contaminant increases or the nature of the contaminant changes. Carbon adsorbs the contaminant molecules onto the surface and requires a nominal dwell time to ensure that this absorption is effective. The carbon surface area is large due to its micro-pore structure.

Air velocity through carbon bed

The dwell time is dictated by the velocity of the air through the carbon bed so the air volume is an important part of the calculation when sizing the filter.

Essentially the filter is sized against air volume – thus providing the dwell time necessary for the contaminant.

Carbon Grade

Coconut shell activated carbon is used – graded to give a nominal CTC absorption of 55% by weight. A less active grade offering 33% absorption CTC is sometimes used for light duty applications.
The activated carbon granules are formed into a panel, or 'biscuit', with the addition of a water soluble binding agent. The panels can be framed for use in existing carbon filter housings or a sealed within a case sized against air volume.
The panels are fitted within the case in a V-formation to offer the largest surface area to the airflow – so providing the reduced air velocity through the panel necessary for optimum adsorption.

Application

Activated carbon is suitable for adsorption of hydrocarbon based materials such as solvents, petroleum products and cooking odours. Specialist impregnated carbons are used where the contaminant is not readily taken up by carbon and the addition of an impregnant on the surface of the carbon enhances performance – this process is often known as chemi-sorption.

Resistance to airflow

Carbon panels are a dense medium and so care is taken to ensure that the resistance to air flow is kept at reasonable levels – deep beds of carbon will provide considerable dwell time but will offer high resistance to airflow so the design needs to address the needs of the air movement system.

What is Activated Carbon

Most technical leaflets on adsorbents list Activated Carbon as one of the best medias for trapping organic matter. This is somewhat surprising to most people as from a quick inspection by eye only reveals a dirty heap of black granules, which resembles coarsely crushed coal. However, Activated Carbon has a number of properties, where it becomes as different from crushed coal as chalk is from cheese.

The primary difference that Activated Carbon has is that is specially processed to extend its pore structure (the existing pores are made up of cracks on the outer surface of the carbonized material). All solid matter is naturally porous and will either absorb (or absorb) other matter. In the vast majority of everyday instances, things are absorbed.

Absorbtion is the process of liquids being adsorbed by solids. The best analogy is that of a bath sponge, which readily adsorbs water, but is coated with talcum powder, will not retain the solid.

With adsorption, the process is primarily the adsorption of solids. Although, in the use of activated carbons, the prime use is for the removal of gases, the gas in question is made up of molecular sized solids.

Carbon is the most prolific element on earth, occurring in all living matter, and also in a multitude of chemicals, minerals and gases. Its properties vary greatly, from the hardest known natural substance, the diamond to material as soft as pencil 'lead' (of course this is actually graphite).



Carbon filters

High Grade *Page 86*
Discarbs *Page 87*
Archive Grade *Page 88*

Construction: High Grade

Frame
Strong galvanized steel frame

Carbon
Granules of activated carbon bonded together to form a carbon panel

Jasun Filtration's dry bonding technique is unique and allows the finished filter maintain the characteristics of the unbounded carbon.

The bonding process negates any possibility of settling or bowling which can happen in loose fill panels. In addition there is no chance of air bypass

As standard – minimum 70% CTC

Technical support
Jasun Filtration can call upon technical backup from one of the most experienced carbon filter laboratories in Europe.

We are able to offer in excess of 30 standard formulations for impregnated activated carbon.

carbon are bonded together to form a carbon panel

This allows us to specify the correct product for each specific application



LINEAR VELOCITY PER SECOND VS PRESSURE DROP
BONDED CARBON PANEL



VELOCITY PER SEC

Standard sizes and capacities

ACTIVATED CARBON PANELS 207C HIGH GRADE 55% CTC MINIMUM BONDED

NORMAL SIZE INCHES	ACTUAL SIZE MM(HXW)	20 MM PANELS		45MM PANELS	
		PART NUMBER	CAPACITY M³/HR @ 0.1 SEC DEWELL TIME	PART NUMBER	CAPACITY M³/HR @ 0.1 SEC DWELL TIME
12X12	292X292	AC207-1-1212	61	AC207-2-212	138
15X15	368X368	AC207-1-1515	98	AC207-2-1515	219
18X18	445X445	AC207-1-1818	143	AC207-2-1818	321
20X20	495X495	AC207-1 -2020	176	AC207-2-2020	397
24X24	594X594	AC207 -1-2424	254	AC207-2-2424	572
20X16	495X495	AC207-1-1820	140	AC207-2-1620	316
25X16	622X394	AC207-1-1625	176	AC207-2-1635	397
25X20	622X495	AC207-1-2025	222	AC207-2-2025	499
24X12	594X292	AC207-1-1224	125	AC207-2 1224	281
24X20	594X495	AC207-1-2024	212	AC207-2-2024	476
24X38	594	AC207-1-1824	159	AC207-2-1824	357

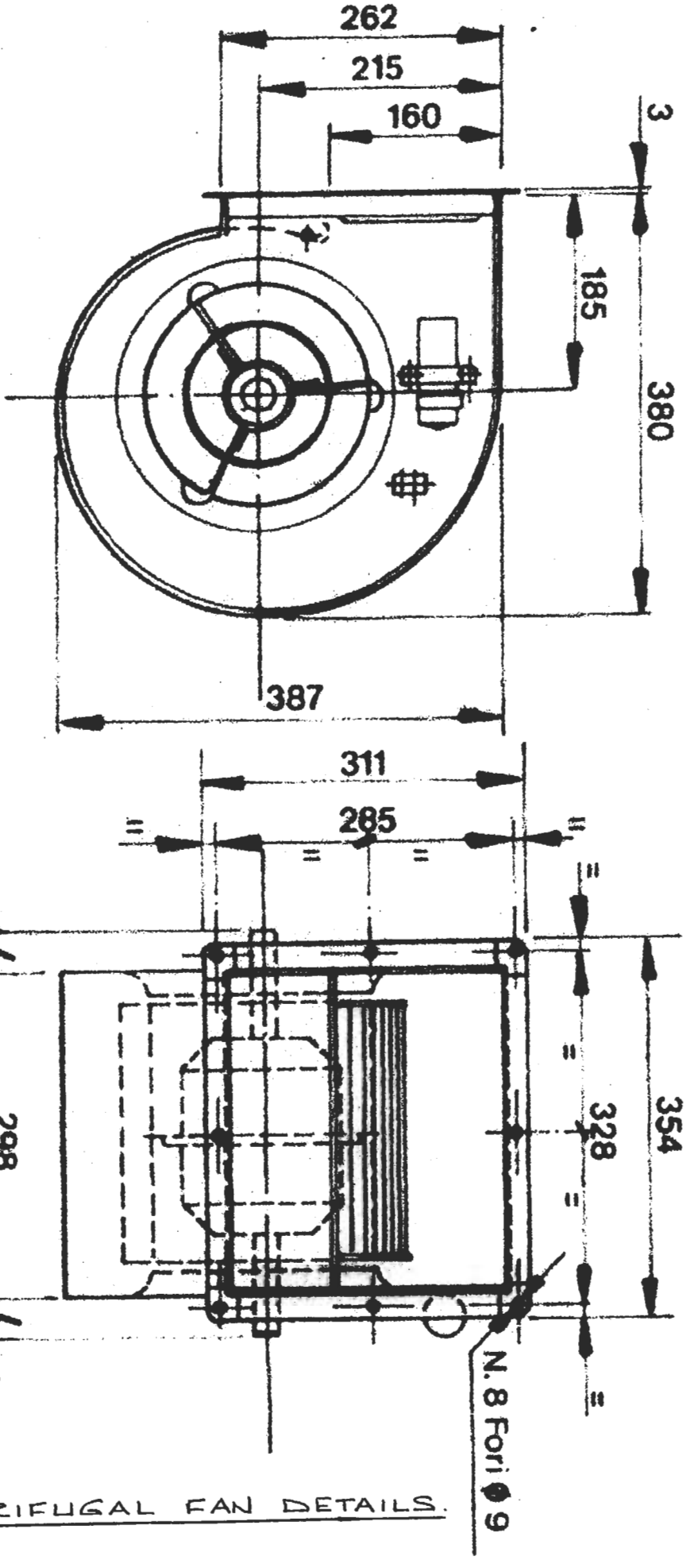

CENTRIFUGAL FAN DETAILS.

DDM 9/9 - 600 W - 4 p - 230 V. - 50/60 Hz.

Ref.: 35

Motor code: E6G3704

NICOTRA S.P.A.

FAN TEST LABORATORY

AMCA STANDARD 210/85 Fig. 12

10000 m3/h CHAMBER

TYPE	DDM 9/9	WATT	600			AMP MAX	6.3
MOTOR	E663704	VOLT	230			PROT. IP	55
TEST	1718	HZ	50			T.H.	YES out
DATE	26-02-1998	mF	25	Vc	450	INS.CL.	F
GAMMA = 1.214 Kg/m3		POLES	4				

Installation type : free inlet # ducted outlet

db(A) free field noise measurements at m 1

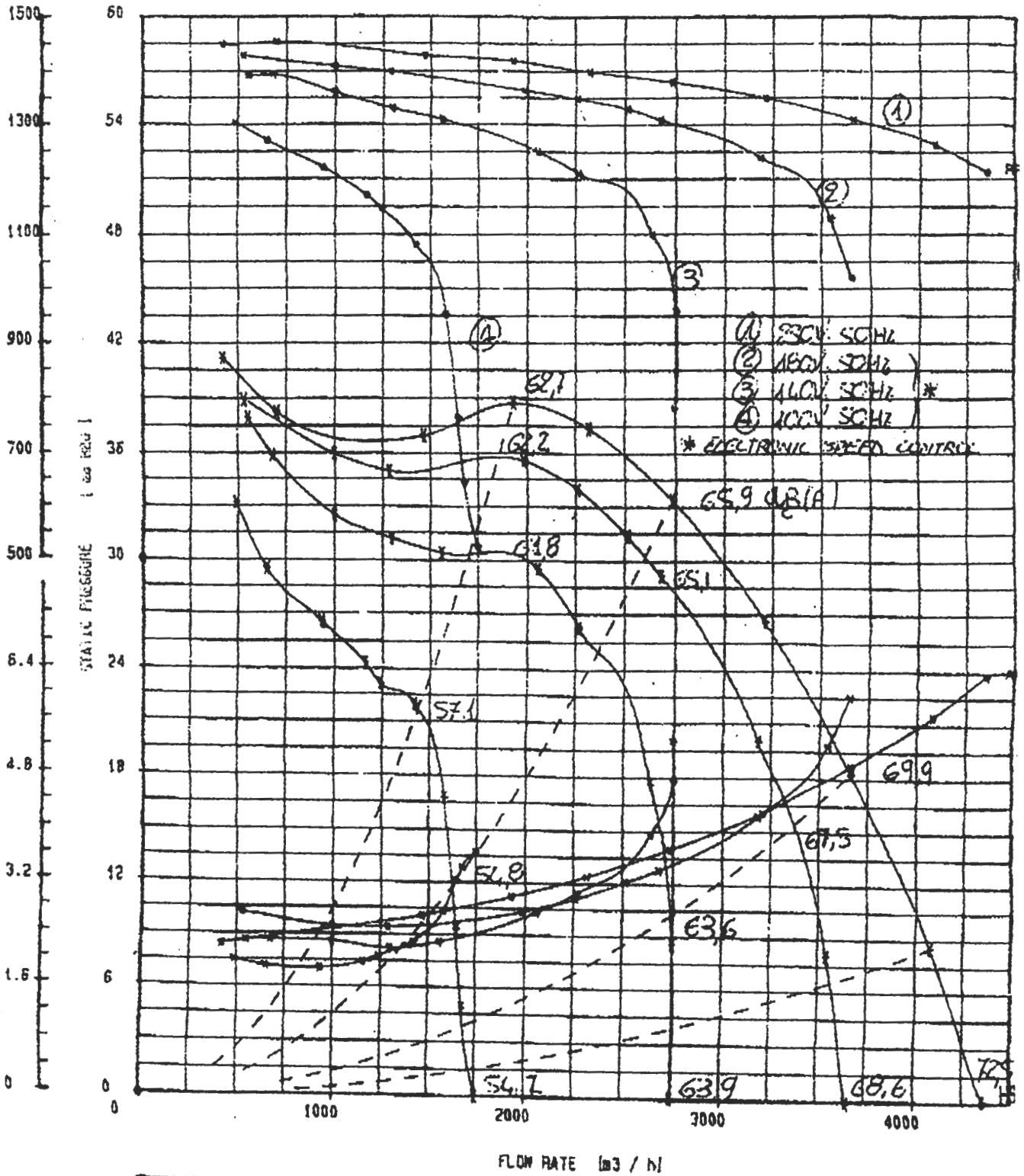

This test data obtained in a laboratory registered by AMCA, for AMCA 210 Air performance testing.

Information Required for Kitchen Extract Systems

This information sheet is intended, as a simple checklist to assist with the compilation and submission of an appropriate scheme of odour control measures to support a planning application for proposed kitchen extract systems.

Volume Extract Rate	0.68	M^3/s
Exit Velocity	4	M/s
Duct Velocity	4.25	M/s
Size of Duct	400 x 400	mm
Total pressure of system	2.00	Pa

Include appropriate details for any of the following proposed components.

	Manufacturer	Model / Type	Pressure Pa	Dwell Time
Fan	VENT-AXIA	NICOTRA CENTRIFUGAL 400 DIA		
Silencer	N/A.			
Carbon Filter	JASUN	CARBON PANEL		0.1
Particulate Control	N/A.			
Neutraliser	N/A.			
Other	KONSAR	PRE - FINTER BAS		

Note* Include Sound Power Level of fan and insertion loss of silencer in octave bands.

Also submit the following documents:

Scale plan of system layout including the position of all components and ductwork runs and clearly indicating the proposed discharge height and position.

Copies of manufacturers performance data sheets for all components

Schedule outlining any maintenance requirements for proposed systems i.e. filter replacement periods

Circular to Rectangular Duct Sizes

Dim de b	Dimension side a																				
	100	125	150	175	200	225	250	300	350	400	450	500	550	600	650	700	750	800	850	900
00	110	123	134	145	154	163	171	185	199	211	222	232	242	251	260	268	276	284	291	298
25	347	138	151	162	173	183	192	209	225	239	251	263	275	285	295	305	314	323	331	339
50	385	394	165	178	190	202	212	231	248	264	278	291	304	316	327	338	348	358	368	377
75	421	430	440	193	206	218	230	251	269	287	303	317	331	344	357	369	380	391	401	411
00	454	464	474	484	220	233	246	269	289	308	325	341	356	371	384	397	409	421	433	444
25	485	496	507	517	527	248	261	286	308	328	346	364	380	395	410	424	437	450	462	474
50	515	527	538	549	560	570	275	301	325	346	366	385	402	419	434	449	463	477	490	503
00	570	583	596	608	620	632	643	330	357	381	403	424	443	462	479	496	512	527	542	556
50	620	635	649	662	676	689	701	714	385	412	436	459	481	501	520	539	556	573	589	605
00	667	683	698	713	727	741	755	768	794	441	467	492	515	537	558	578	597	616	633	650
50	710	727	744	760	776	791	806	820	848	874	496	522	547	571	594	615	636	655	674	693
00	751	770	787	804	821	837	853	869	898	927	954	551	577	603	627	650	672	693	713	733
50	790	810	828	847	864	882	898	915	946	976	1005	1033	606	633	658	682	706	728	749	770
00	827	848	867	887	905	924	941	959	992	1024	1054	1084	1112	661	688	713	738	761	784	806
0	862	884	905	925	945	964	982	1001	1036	1069	1101	1132	1162	1191	716	743	769	793	817	840
0	896	919	940	962	982	1002	1022	1041	1077	1113	1146	1179	1210	1240	1269	771	798	824	849	873
0	928	952	975	997	1018	1039	1059	1079	1118	1154	1190	1223	1256	1287	1318	1347	826	853	879	904
0	959	984	1008	1031	1053	1075	1096	1117	1157	1195	1231	1267	1301	1333	1365	1396	1426	881	908	934
0	989	1015	1039	1063	1086	1109	1131	1152	1194	1234	1272	1308	1344	1378	1411	1443	1474	1504	936	963
0	1018	1044	1070	1095	1119	1142	1165	1187	1230	1271	1311	1349	1385	1421	1455	1488	1520	1551	1582	991
0	1046	1073	1100	1125	1150	1174	1198	1221	1265	1308	1349	1388	1426	1462	1498	1532	1565	1597	1629	1659
0		1101	1128	1155	1180	1205	1230	1254	1299	1343	1385	1426	1465	1503	1539	1575	1609	1642	1675	1706
0			1156	1184	1210	1236	1261	1285	1332	1378	1421	1463	1503	1542	1580	1616	1652	1686	1719	1752
0				1211	1239	1265	1291	1316	1365	1411	1456	1499	1540	1580	1619	1657	1693	1729	1763	1797
0					1266	1294	1320	1346	1396	1444	1490	1534	1577	1618	1658	1696	1734	1770	1806	1840
0						1322	1349	1375	1427	1476	1523	1568	1612	1654	1695	1735	1773	1811	1847	1882
0							1377	1404	1456	1507	1555	1602	1646	1690	1732	1772	1812	1850	1888	1924
0								1432	1486	1537	1587	1634	1680	1725	1768	1809	1850	1889	1927	1965
0									1542	1596	1648	1697	1745	1792	1837	1881	1923	1964	2004	2043
0										1652	1706	1758	1808	1857	1904	1949	1993	2036	2078	2119
0											1762	1816	1868	1919	1968	2015	2061	2106	2149	2192
0												1872	1926	1979	2029	2078	2126	2173	2218	2262
0													1982	2036	2089	2140	2189	2237	2284	2330
0														2092	2147	2199	2250	2300	2348	2396
															2203	2257	2310	2361	2411	2459
																2313	2367	2420	2471	2521
																	2423	2477	2530	2582
																		2533	2587	2640
																			2643	2697
																				2753
	950	1000	1050	1100	1150	1200	1250	1300	1400	1500	1600	1700	1800	1900	2000	2100	2200	2300	2400	2500

Velocity Pressure Pa against velocity m/s

m/s	0	0.1	0.2	0.3	0.4	0.5	0.6	0.7	0.8	0.9
0	0	0.01	0.02	0.05	0.1	0.15	0.22	0.29	0.38	0.49
1	0.6	0.73	0.86	1.01	1.18	1.35	1.54	1.73	1.94	2.17
2	2.4	2.65	2.9	3.17	3.46	3.75	4.06	4.37	4.7	5.05
3	5.4	5.77	6.14	6.53	6.94	7.35	7.78	8.21	8.66	9.13
4	9.6	10.09	10.58	11.09	11.62	12.15	12.7	13.25	13.82	14.41
5	15	15.61	16.22	16.85	17.5	18.15	18.82	19.49	20.18	20.89
6	21.6	22.33	23.06	23.81	24.58	25.35	26.14	26.93	27.74	28.57
7	29.4	30.25	31.1	31.97	32.86	33.75	34.66	35.57	36.5	37.45
8	38.4	39.37	40.34	41.33	42.34	43.35	44.38	45.41	46.46	47.53
9	48.6	49.69	50.78	51.89	53.02	54.15	55.3	56.45	57.62	58.81
10	60	61.21	62.42	63.65	64.9	66.15	67.42	68.69	69.98	71.29
11	72.6	73.93	75.26	76.61	77.98	79.35	80.74	82.13	83.54	84.97
12	86.4	87.85	89.3	90.77	92.26	93.75	95.26	96.77	98.3	99.85
13	101.4	102.97	104.54	106.13	107.74	109.35	110.98	112.61	114.26	115.93
14	117.6	119.29	120.98	122.69	124.42	126.15	127.9	129.65	131.42	133.21
15	135	136.81	138.62	140.45	142.3	144.15	146.02	147.89	149.78	151.69
16	153.6	155.53	157.46	159.41	161.38	163.35	165.34	167.33	169.34	171.37
17	173.4	174.45	177.5	179.57	181.66	183.75	185.86	187.97	109.1	192.95
18	194.4	196.57	198.74	200.93	203.14	205.35	207.58	209.81	212.06	214.33
19	216.6	218.89	221.18	223.49	225.82	228.15	230.5	232.86	235.22	237.61
20	240	242.41	244.82	247.25	249.7	252.15	254.62	257.09	259.58	262.09
21	264.6	267.13	269.66	272.41	274.78	277.35	279.94	282.53	285.14	287.77
22	290.4	293.05	295.7	298.37	301.06	303.75	306.46	309.17	311.9	313.65
23	317.4	320.17	322.94	325.73	328.54	331.35	334.2	337.01	339.86	342.73
24	345.6	348.49	351.58	354.29	357.22	360.15	363.1	366.05	369.02	372.01
25	375	378.01	381.02	384.05	387.1	390.15	393.22	396.29	399.38	402.49
26	405.6	408.73	411.86	415.01	418.18	421.25	424.54	427.73	430.94	434.17
27	437.4	440.65	443.9	447.17	450.46	453.75	457.06	460.37	463.7	467.05
28	470.4	473.77	477.14	480.53	483.94	487.35	490.78	494.21	497.66	501.13
29	504.6	508.09	511.58	515.09	518.62	522.15	525.7	529.25	532.82	536.41
30	540	543.61	547.22	550.85	554.5	558.15	561.82	565.49	569.19	572.89
31	576.6	580.33	584.06	587.81	591.58	595.35	599.14	602.93	606.74	610.57
32	614.4	618.25	622.1	625.97	629.86	633.75	637.66	641.57	645.5	649.45
33	653.4	657.37	661.34	665.33	669.34	673.35	677.38	681.41	685.46	689.53
34	693.6	697.69	701.78	705.89	710.02	714.15	718.3	722.45	726.62	730.81
35	735	739.21	743.42	747.65	751.9	756.15	760.42	764.69	768.98	773.29
36	777.6	781.93	786.86	790.81	794.98	799.35	803.72	808.13	812.54	816.97
37	821.4	825.85	830.3	834.77	839.26	843.75	848.26	852.77	857.3	861.85
38	866.4	870.97	875.54	880.13	884.74	889.35	893.98	898.61	903.26	907.93
39	912.6	917.29	921.98	926.69	931.42	936.15	940.9	945.65	950.42	955.21
40	960	964.81	969.62	974.45	979.3	984.15	989.02	993.89	998.78	1003.7

Assuming equal volume, pressure drop and surface roughness

$V_p = 10.8$ pa/m/s.

Figure 7.12 *Duct sizing chart*

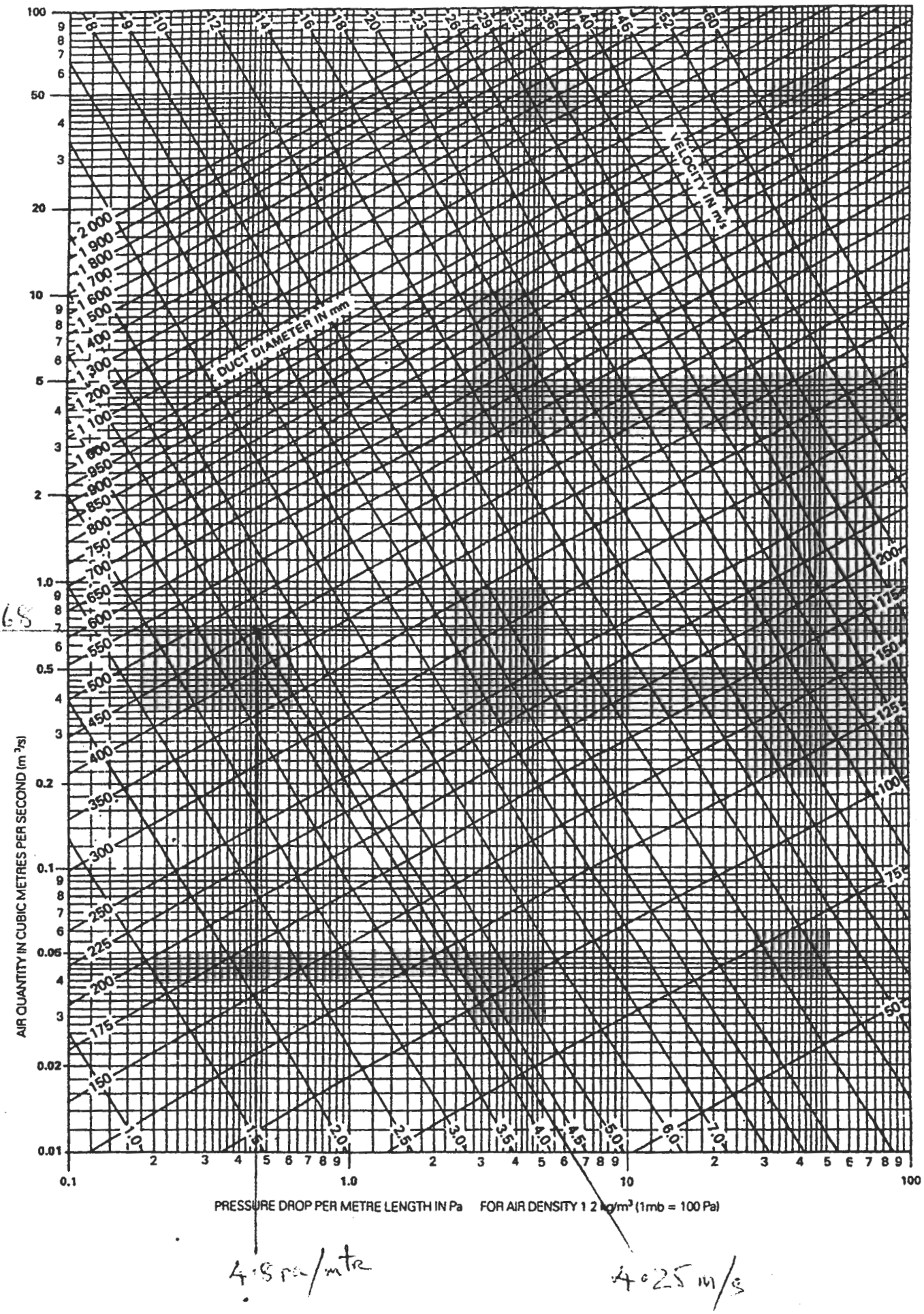

This chart is reproduced from the CIBS Guide