7/10/67574



Tree Liability
In The South

Arboricultural Consultants
Tel: 01425 476965
Mob: 07875 842399

Tree Surveys
Tree Health Checks
Tree Liability Management

Arboricultural reports for:

Planning Applications
Mortgages
Insurance
Tree Liability
Subsidence

Landscape and Planting schemes

Ecological Reports

Principal: Sheena Pain
BScHons, DipHE, MCMI,
ISA Certified Arborist

Associate Specialists

IMPACT AND METHOD STATEMENT
TREE PROTECTION PLAN

HAMBLE CLIFF LODGE, WEST FIELD COMMON, HAMBLE

Prepared by: Sheena Pain, Arboriculturalist
Plans: Helen Russell
Dated: 14th June 2010

The Office, Three Gables, Shobley, Ringwood BH24 3HT
Email: info@treeliability.com www.treeliability.com

CONTENTS

Summary		3
1.0	Introduction	4
2.0	Tree survey	4 – 5
3.0	Arboricultural Impact Statement	5 – 6
4.0	Supervisory visits	6
6.0	Follow through with Local authority	7
7.0	Method Statement	7 - 10

Appendices:

Appendix One:	Tree Survey Schedule
Appendix Two:	Table 1 - extract from BS5837: *Trees in Relation to Construction 2005*
Appendix Three:	Tree Protection Plans
Appendix Four:	Supervisory format for Development Period

SUMMARY

The proposal is to build an extension to the property at Hamble Cliff Lodge, Hamble, SO31 4HY. The purpose of this report is to provide an Impact and Method Statement with a Tree Protection Plan to address the protection of the trees on the site. If approved, the report forms part of the Planning Consent.

The property sits within a wooded landscape and rear landscaped gardens: the latter affords privacy and seclusion to the property.

There are currently no trees on the site subject to a Tree Preservation Order (TPO) nor does the site lie within a designated Conservation Area.

The trees comprise a mixture of indigenous and introduced exotics and ornamentals including Monterey Pines, Sweet chestnut, deciduous Oaks and Holm Oaks, Birch, Sycamore, a Tulip tree, Eucalypti, Cherry and Apple trees.

The Tree Protection Plan which forms part of this report, sets out the nature of the Tree protection fencing as defined within the recommendations of BS:5837: 2005. The remainder of the trees on site will be protected by a well defined Heras fenced exclusion zone significantly beyond their Root Protection Areas (RPAs) and shown on the Tree Protection Plan accordingly.

No loss of quality trees is required to achieve the proposal. Three trees are identified as being 'R' category (T1, T9 and T12) and thus require removal due to their condition and in the interests of sound Arboricultural management.

The trees on this site should not act as a deterrent to the building of the proposed extension.

The Office, Three Gables, Shobley, Ringwood BH24 3HT
Email: info@treeliability.com www.treeliability.com

1. Introduction

1.1 The proposal:

1.1.1 The proposal is to build an extension to the existing property at Hamble Cliff Lodge whilst retaining the main dwelling. The trees pertinent to the proposal have been surveyed and the constraints identified in an Arboricultural Impact Assessment and Constraints Plan submitted in May 2010 from which the architects Guion Brown have identified a footprint that acknowledges the tree constraints on the site.

1.2 Trees on (and off) the site :

1.2.1 A Visual Tree Assessment (VTA) was carried out together with the necessary measurements required under section 4.2.6 of the British Standards.

1.2.2 A copy of the Tree Survey Schedule is included at Appendix One. The trees have been quality assessed as per Table 1 of the BS5837: *Trees in Relation to Construction* (see Appendix Two).

1.2.3 The trees comprise a mixture of indigenous and introduced exotics and ornamentals including Monterey Pines, Sweet chestnut, deciduous Oaks and Holm Oaks, Birch, Sycamore, a Tulip tree, Eucalypti, Cherry and Apple trees. The most prominent trees are within the rear garden, although the group to the north of the house (adjacent to the highway) includes tall specimens of Monterey pines, Eucalypti and small canopied Cherries and Birch. Many of the trees within the latter group exhibit poor height to stem diameter ratios, lack of lower branching development and characteristically relatively small crowns.

1.2.4 The other trees growing within the boundaries are ornamentals, fruit trees and shrub areas with a wooded area to the south west of the site comprising Oaks, Sycamore and Hazel.

1.2.5 There are currently no trees on the site subject to a Tree Preservation Order (TPO) nor does the site lie within a designated Conservation Area.

2.0 The Tree Survey

2.1.1 Emphasis has been placed on the most significant and good quality trees on the site with an assessment of any constraints they may place on a proposal. Accordingly, a Constraints Plan has been drawn up showing the developable area after Root Protection Areas have been taken into consideration. Each tree number on the Plan is coloured according to the categorisation of the trees for the purposes of BS5837: Category **'A'** trees are coloured **Green,** Category **'B'** trees are coloured **Blue,** Category **'C'** trees are coloured **Grey** (dark grey on the Plan) and Category **'R'** trees are coloured **Red.**

The Office, Three Gables, Shobley, Ringwood BH24 3HT
Email: info@treeliability.com www.treeliability.com

2.1.2 Please note that for BS5837 purposes, in general Category 'C' trees are *'low quality and value: currently adequate to remain until new planting could be established'.* As such, we can negotiate for removal of the same *should this be required.* . Eight trees on the site were identified as being 'C' category (T4, T4a, T5a, a group of Birches, T10, T14 and two fruit trees).

2.1.3 Category 'B' trees are *'those of moderate quality and value: those in such a condition as to make a significant contribution'..* There are five 'B' category trees on the site T2, T3, T5, T6 and T8.

2.1.4 Category 'A' trees are *'trees of high quality value'* and two such trees were identified on the site. (T11, T13)

2.1.5 Category 'R' trees are trees that are not long term *'and should be removed for reasons of strong Arboricultural management'.* Three trees are identified as being 'R' category (T1, T9 and T12) on the site and their removal forms part of the Method Statement attached.

2.1.6 An assessment of the constraints the trees would place upon the buildings was provided with a Constraints Plan showing the potential developable footprint in May 2010. The information gleaned from the survey led to initial guidance given on tree protection measures. Subsequently, the design has been modified accordingly. The methods of protecting the trees off-site has now been provided in this report and shown step-by-step to enable the construction of the buildings to occur with due consideration for the trees.

3.0 Arboricultural Impact Assessment

3.1. T1 and T9 are two of the three Category 'R' trees which should be removed PRIOR to works commencing on site in the interests of sound tree management due to their condition. A separate report has been submitted to the clients Mr and Mrs Quinn detailing the condition of T12, Holm Oak.

3.2 The main constraint to the development will be the root protection area required for T3, a Monterey Pine (Category 'B'). The radius of the RPA for T3 is 8640mm from the centre of the tree.

3.3 The second constraint to be considered concerns T3 where shading, dominance or where future growth may be an issue. Owing to the presence of the Sweet chestnut T9, the canopy of the Pine has been restricted at this point to 5m east of the main bole. Owing to the tree's orientation north-west of the main proposal, there should not be a major shading issue.

3.4 The Cupressus spp. hedgerow at the front of the property is not considered to be a constraint and should be removed. This will assist light to the property.

The Office, Three Gables, Shobley, Ringwood BH24 3HT
Email: info@treeliability.com www.treeliability.com

3.5 Additional measures:

A number of issues also need to be addressed for the method of tree protection on site during the construction period. Any changes to should be brought to the attention of the Planning officer prior to Consent being granted.

- Location of services – as existing.
- Removal of old services – not applicable.
- Location of overhead wires – tree branches of the larger Beech tree may need trimming back from the wires at some point.
- Retention and replacement of hard surfacing – The existing driveway is to remain.
- Location of driveways and other accesses – dealt with above and measures taken to protect the trees. – A new driveway should be installed PRIOR to the commencement of construction and this will help keep the public road clear of contractors' parked vehicles.
- Additional root protection precautions – Not necessary.

4.0 Tree protection fencing:

4.0.1 The new extension does encroach into the rooting area of T3. A Fig 2 and Fig 3 specification is justified and should be erected 2m from T2 and 4.8m from T3 as shown on the plan and illustrated in the Method Statement. This will enable construction to take place while still protecting the rooting areas of those trees.

4.0.2 T9 should be carefully removed and this will give T3 more rooting area

4.0.2 The tree protection fencing is to be erected PRIOR to any work commencing on site.

4.0.3 Any deviation required should be addressed at the first meeting on site with the Arboriculturalist and Site Manager (and possibly a Tree Officer).

5.0 Supervisory Visits:

5.0.1 Supervisory visits to the site to check on the Arboricultural recommendations may form part of the Planning Consent. This will require an Arboriculturalist to meet on agreed dates with the Contracts Manager (and on occasion with the Tree officer from the Local authority). The latter will be notified in advance of the **first meeting** at which the Tree Officer may choose to attend.

5.0.2 Once a contractor is appointed, he should make himself/herself available for the Arboriculturalist's site visits. The contractor should be made aware that all findings on the visits are reported to the Local authority.

5.0.3 The format of a standard TLS supervisory contract is attached as an example but it will be dove-tailed to fit further issues that require addressing and it will be re-drawn accordingly with a copy submitted to the Local authority.

The Office, Three Gables, Shobley, Ringwood BH24 3HT
Email: info@treeliability.com www.treeliability.com

5.0.4 The ultimate Builder should have a copy of this Method Statement once approved and be aware of the supervisory visits that require to be agreed and set up with the Arboriculturalist PRIOR to commencement of work on site.

5.0.5 The above issues have been addressed wherever possible as part of the Method Statement below and others must be clarified on the first supervisory visit on site.

7.0 Follow-through with the Local authority:

7.1 At a later stage, the Architect will be asked for details of when the application was registered with the Local authority together with the Planning Ref. No. in order that we can contact the Tree Officer dealing with the case to establish what further information he requires.

8.0 Method Statement:

8.1 This Method Statement forms part of the Planning Consent for the proposed extension. All methodology will be conditioned and any changes have to be agreed with the Local authority.

8.2 This Report leads in to the step-by-step methodology for commencement of activities on site and each step should be followed.

9.0 Commencement of Activities on Site : Methodology

Step One : Site Activities :

Contact the Arboriculturalist to establish the date proposed for the commencement of the construction work on site. This is to ensure the contractor has a copy of this Method Statement, Tree Protection Plan and Supervisory form. Discuss any issues with the contractor and agree a **first meeting** on site.

Step Two: Treework :

Remove T1 and T9 before work commences on site. Particular care should be taken when removing T9 to avoid causing damage to the roots of T3.

The Office, Three Gables, Shobley, Ringwood BH24 3HT
Email: info@treeliability.com www.treeliability.com

Tree work must be carried out by a health and safety certificated Tree surgeon and carried out to BS3998 Standards and all results from the pruning to be removed from site.

A **second supervisory meeting** should now take place to discuss any issues regarding the placing of Tree protection fencing; contractors parking or any other relevant issue.

Step Three: Tree protection fencing

1. Erect Heras fencing on concrete blocks from the front left-hand side of the existing driveway (north-east) along the edge of the driveway to the back of the existing garage, following through to the front (north) of the two fruit trees and across the garden at approximately 9m west of the existing garage. The latter should link with the fence-line at the swimming pool.

2. Erect Fig2/3 specification (as shown below) at the points indicated on the Tree Protection plan.

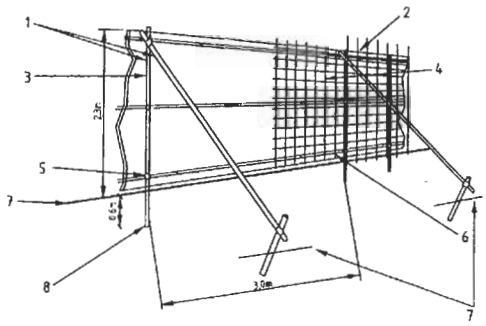

9.2.2 Barriers should consist of a scaffold framework comprising of vertical and horizontal framework, well braced to resist impacts, with vertical tubes spaced at a maximum interval of 3m. Onto this weld mesh panels should be securely fixed with wire or scaffold clamps.

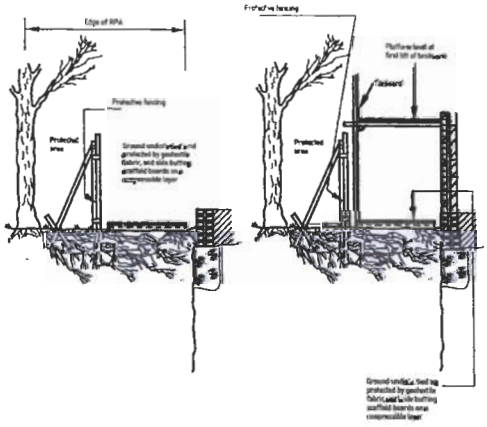

9.3.2 For pedestrian movements within the RPA, the installation of ground protection should be *in the form of a single thickness of scaffold boards on top of a compressible layer, laid onto a Geotextile membrane or supported by scaffold.*

The Office, Three Gables, Shobley, Ringwood BH24 3HT
Email: info@treeliability.com www.treeliability.com

Third supervisory meeting to check the fencing is properly aligned and measured off. Dates should be set for future meetings to link with expected time-scales.

Step Four: Further precautions for protection of trees:

No mixing of concrete close to tree protection barriers. A mixing and storage area should be found on the existing drive close to the house.

No dumping of toxic waste on the site and no fires to be lit.

Step Five: Contractors parking, storage of materials on site and mixing areas:

Storage and mixing areas should be identified at the first meeting on site involving the Building contractor, Arboriculturalist and Tree Officer.

Step Six: Construction period:

All fencing to remain in place throughout the construction period.

Two supervisory visits will take place during the construction period (dates to be agreed prior to the meetings).

Step Nine: Removal of fencing:

All tree protection fencing can now be removed from site.

Step Ten: Post construction and post landscaping:

Particular care should be taken to maintain existing soil levels around trees.

No hard surfacing should be laid in root protected areas.

Step Eleven: Supervisory Site Visits:

A final Supervisory Site Visit will have been included in the timetable for supervision but any change to timings should be notified to the Arboriculturalist.

The Office, Three Gables, Shobley, Ringwood BH24 3HT
Email: info@treeliability.com www.treeliability.com

All dates for supervisory visits will be arranged at the initial first visit and on the final visit the Supervisory Form will be signed off.

Tree Liability in the South

Date of preparation 14th June 2010

A copy of this document must be used by the ultimate contractor as it is a condition on the Planning consent.

The Office, Three Gables, Shobley, Ringwood BH24 3HT
Email: info@treeliability.com www.treeliability.com

APPENDIX ONE

TREE QUALITY ASSESSMENT AS PER TABLE 1

Category A – light green
In general: Trees of high quality and amenity value in such a condition as to make a substantial contribution (40 years)

A1 Good examples of their species; formal or semi-formal arboricultural features (dominant trees)

A2 Trees, groups or woodland providing screening or softening effect to views into or out of the site

A3 Trees, groups or woodlands of significant conservation and historical value (veteran trees)

Category B – mid blue
In general: Trees of moderate quality and value in such a condition as to make significant contribution (20 years)

B1 Trees downgraded, impaired condition, remediable defects including unsympathetic past management e.g. indiscriminate pruning, topping.

B2 Trees as groups, distinct

B3 Identifiable conservation/cultural benefits

Category C - grey
In general: Trees of low quality and value; currently in adequate condition to remain in place until new planting could be established in ten years. Young trees with a stem diameter below 150mm.

C1 Not Category A or B trees

C2 Trees in groups or woodlands but with no significant landscape value or trees offering low or only temporary screening.

C3 Trees with limited conservation/cultural benefits

Category R – dark red
In general: Trees in such a condition that any existing value would be lost within 10 years and trees that should be removed for reasons of sound arboricultural management. Trees with serious, irremediable, structural defects; dead or showing signs of immediate and irreversible decline; trees infected with pathogens injurious to health/safety of trees nearby. Trees could be kept as a bat roost or a bat box installed nearby or simply as a large stump for invertebrates.

SITE: Hamble Cliff Lodge Hamble SO31 4HY
CLIENT:Mr Quinn
BRIEF:Tree survey

SURVEYOR: H Russell
ASSESSMENT DATE: 29th April 2010; 10.30am; Weather Fine and dry

JOB REFERENCE:

SHEET NO. 1

Survey commenced on: Facing front of property - RHS

TREE NO	SPECIES	HEIGHT (M)	STEM DIAMETER (cm)	BRANCH SPREAD	HEIGHT OF CROWN	AGE CLASS	Amenity value and screening	STRUCTURAL CONDITION PHYSIOLOGICAL CONDITION	PRELIMINARY MANAGEMENT	R/C YEARS	CATEGORY	RPA
1	*Eucalyptus gunnii*	18	86	N5 S6 W5 E7	5m	M	Boundary Tree on road edge.	Major included bark from 1.1m to 2m on west side. Bifurcated at 2m. On east side inclusion erupting. Potentially a mjor structural defect. Currently sheltered from prevailing winds by 8m Leylandii hedge.	Monitor. The Eucalyptus should be felled on safety grounds because access Is used by boat owners and pedestrians on a regular basis.	Less than 10 years	R	
2	Oak *Quercus robur*	18	46	N4 S5 W4 E4	6M to 7M	SM	Major lower branching is epicormic with lots of deadwood	Some mature epicormic wood on lower trunk	Remove epicormic and deadwood branches		Lower B	
3	Monterey Pine *Pinus radiata*	17	72	N5 S9 W8 E5	Ground Level GL 6m	M	Crown level on east side is 6m from ground.	Major deadwood to east side and ivy growth.	Remove deadwood.	20-40 yrs	B	

KEY Col 1=Tag or tree no. Col 2=species Col 3=height Col 4=stem diameter Col 5=crown spread Col 6= crown spread off ground Col 7=age Col 8= Physiological condition Col 9= Structural condition Col 10=preliminary management Col 11=Remaining contribution in years Col 12=Category Col 13=Root Protection Area

4	*Eucalyptus gunnii*	18	33	N6 S6 W4 E5	8M All round	YM	Minimal screening value because it is tall and drawn.	Single stem with rope inclusion at 1m girdling stem.	Poor height to stem diameter ratio. Tall and drawn.	10 yrs	C	
4a	Cherry *Prunus avium*	13	15	N3 S2 W3 E3		Y	Lower canopy dead up to 6m	Tall and drawn. Bifurcated at 2.5m	Deadwood. Fungus on upper branch at 6m. *Daedaleopsis confragosa*	10 yrs	C	
5	*Eucalyptus gunnii*	18	42	N7 S4 W4 E6	6m all round			Bifurcated at 1.8m	Remove limb to north. Remove ivy.	20 – 40 yrs	B	
5a	Cherry *Prunus avium*	14	20	N4 S4 W4 E3	1 6 1 6			Bifurcated at 3m. Deadwood.	Remove deadwood and ivy band.		C	
6	Monterey Pine *Pinus radiata*	18	42	N4 S3 W4 E4	7m if deadwood Is removed			Lower deadwood to 7m. Crown clearance required. Tall and drawn. Not vigorous in growth pattern.			Lower B	
7 Group 1	Group of 4 Birches *Betula pendula*	12	Average 23cm each	N3 S4 W6 E1				Branch spread measured from the birch that is 4m away from T6			C	

KEY Col 1=Tag or tree no. Col 2=species Col 3=height Col 4=stem diameter Col 5=crown spread Col 6= crown spread off ground Col 7=age Col 8= Physiological condition Col 9= Structural condition Col 10=preliminary management Col 11=Remaining contribution in years Col 12=Category Col 13=Root Protection Area

8	*Liriodendron tulipifera*	8	19	N33 S3 W3 E3	1m all round	Y	Future specimen garden tree.	Trifurcation @ 1.8m	Historic formation pruning cuts at 1.7m		B	
9	Multi-stem Sweet Chestnut *Castanea sativa*	10	14 stems				Could be felled if not in a conservation area	Overstood coppice. Either re-coppice or remove if not in a conservation area.	Some basal decay.		R	
10	Monterey Pine *Pinus radiata*	15	33	N3 S4 W3 E4	Ground level	Y	Canopy showing considerable yellowing of needles and needle drop.	Distal and proximal needle drop on south side.	Remove build up of needles from around trunk and monitor needle drop.		C	
11	Sweet Chestnut *Castanea sativa*		82	N5 S6 W5 E6	2.5m all round	M		Bifurcated at 2m. Major deadwood.	Previous historic pruning. Cavity at base on west side probably dormouse.	40 yrs	A	
12	Holm Oak *Quercus ilex*		110cm at 20cm above ground level				Dangerous to leave it standing.	There is a 90cm diameter cavity leaving only 10 cm either side of it to hold the tree up.	Base is rotted through. There could be a bumble bees nest inside it.		R	
13	Red Oak *Quercus rubra*	13	65	N5 S7 W6 E5	1.5 all round			Major deadwood. Historic pruning cuts.	Clear ivy. Lower epicormic branching to 6m. Clear deadwood to 5m.		A	

KEY Col 1=Tag or tree no. Col 2=species Col 3=height Col 4=stem diameter Col 5=crown spread Col 6= crown spread off ground Col 7=age Col 8= Physiological condition Col 9= Structural condition Col 10=preliminary management Col 11=Remaining contribution in years Col 12=Category Col 13=Root Protection Area

14	*Prunus cerasifera nigra*	12	MS				Provides some minor screening on boundary at roadside.				C	
Group 2	Fruit Trees						2 Apple trees					
NOTE							Outside the property on opposite side of road there is a line of mature Beech & Oaks. They have a crown clearance in excess of 5m over the road. Further down the road there is an overhanging Holm Oak with a crown clearance of aabout 4m. There is an understorey of self sown sycamores, yew,holly.					
Group	Leylandii hedge	8m							Remove			

KEY Col 1=Tag or tree no. Col 2=species Col 3=height Col 4=stem diameter Col 5=crown spread Col 6= crown spread off ground Col 7=age Col 8= Physiological condition Col 9= Structural condition Col 10=preliminary management Col 11=Remaining contribution in years Col 12=Category Col 13=Root Protection Area

TREE QUALITY ASSESSMENT AS PER TABLE 1

Category A – light green
In general: Trees of high quality and amenity value in such a condition as to make a substantial contribution (40 years)

A1 Good examples of their species; formal or semi-formal arboricultural features (dominant trees)

A2 Trees, groups or woodland providing screening or softening effect to views into or out of the site

A3 Trees, groups or woodlands of significant conservation and historical value (veteran trees)

Category B – mid blue
In gen significant contribution (20 years)

B1 Trees downgraded, impaired condition, remediable defects including unsympathetic past management e.g. indiscriminate pruning, topping.

B2 Trees as groups, distinct

B3 Identifiable conservation/cultural benefits

Category C - grey
In general: Trees of low quality and value; currently in adequate condition to remain in place until new planting could be established in ten years. Young trees with a stem diameter below 150mm.

C1 Not Category A or B trees

C2 Trees in groups or woodlands but with no significant landscape value or trees offering low or only temporary screening.

C3 Trees with limited conservation/cultural benefits

Category R – dark red
In general: Trees in such a condition that any existing value would be lost within 10 years and trees that should be removed for reasons of sound arboricultural management. Trees with serious, irremediable, structural defects; dead or showing signs of immediate and irreversible decline; trees infected with pathogens injurious to health/safety of trees nearby. Trees could be kept as a bat roost or a bat box installed nearby or simply as a large stump for invertebrates.

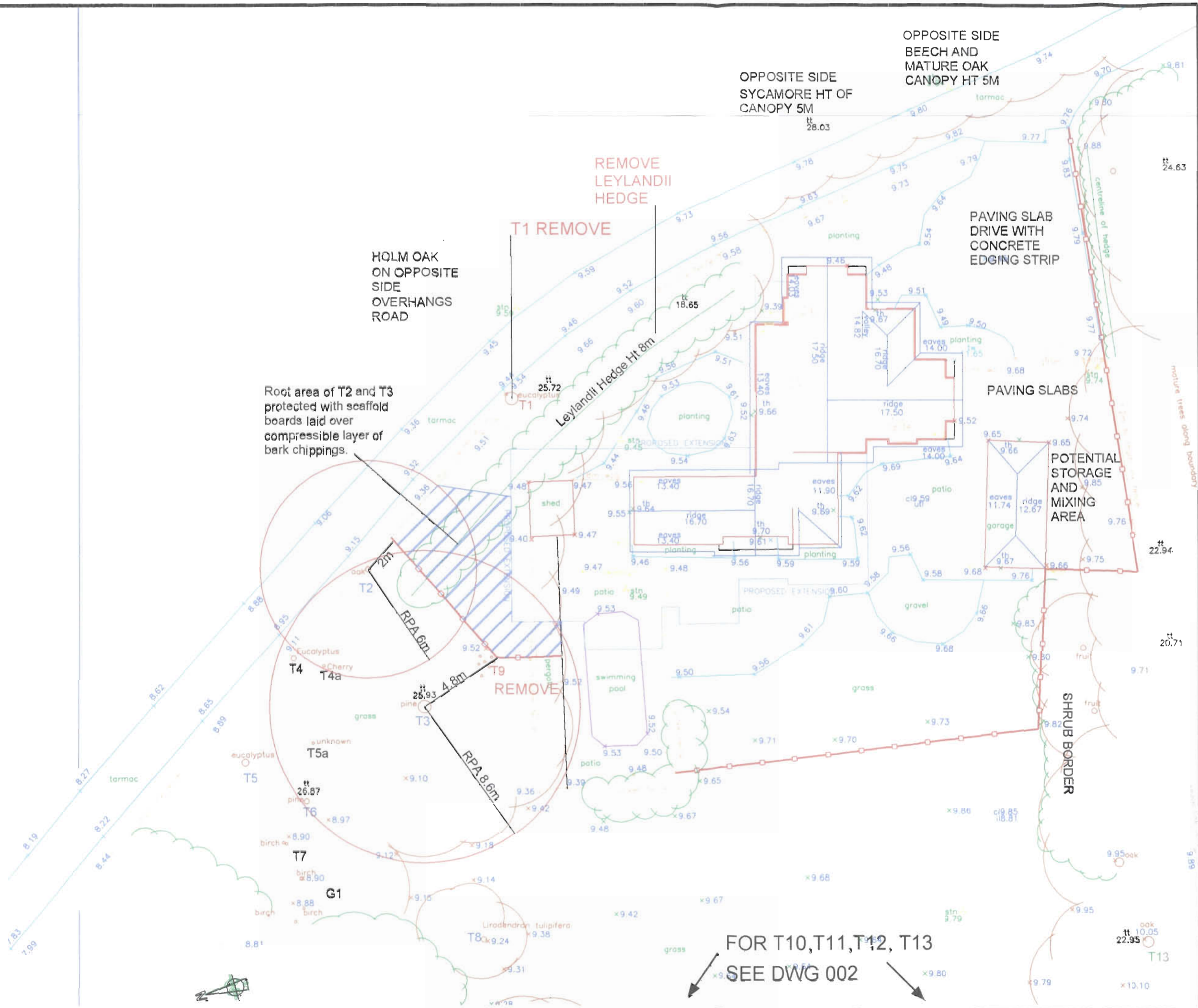

KEY

Tree Protection Fence
HERAS PANELS ON BLOCKS

BS5837 FIG 3 FENCE WITHIN A ROOT PROTECTION AREA. SCAFFOLD BOARDS LAID OVER COMPRESSIBLE LAYER, ON GEOTEXTILE MEMBRANE.

T1 Tree colour according to
BS5837:2005.Category A. Green
BS5837:2005.Category B. Blue
BS5837:2005.Category C. Grey
(shown black on this plan)
BS5837:2005.Category R. Red

From an original topographical plan supplied by
P Stubbington Land Surveys Ltd
DATED: MARCH 2010

NOTE:
Do not scale from this plan.
All measurements to be verified on site.

Drawing Title:
TREE PROTECTION PLAN
(T1 TO T9)

HAMBLE CLIFF LODGE
HAMBLE

Scale:	1:200
Date:	14.06.2010
Drawn By:	HNR
Dwg No:	001

Tree Liability in the South
Arboricultural Consultants

Three Gables, Shobley
Ringwood, Hampshire
BH24 3HT
info@treeliability.co.uk
Tel: 01425 476965 Mob:07875 842399

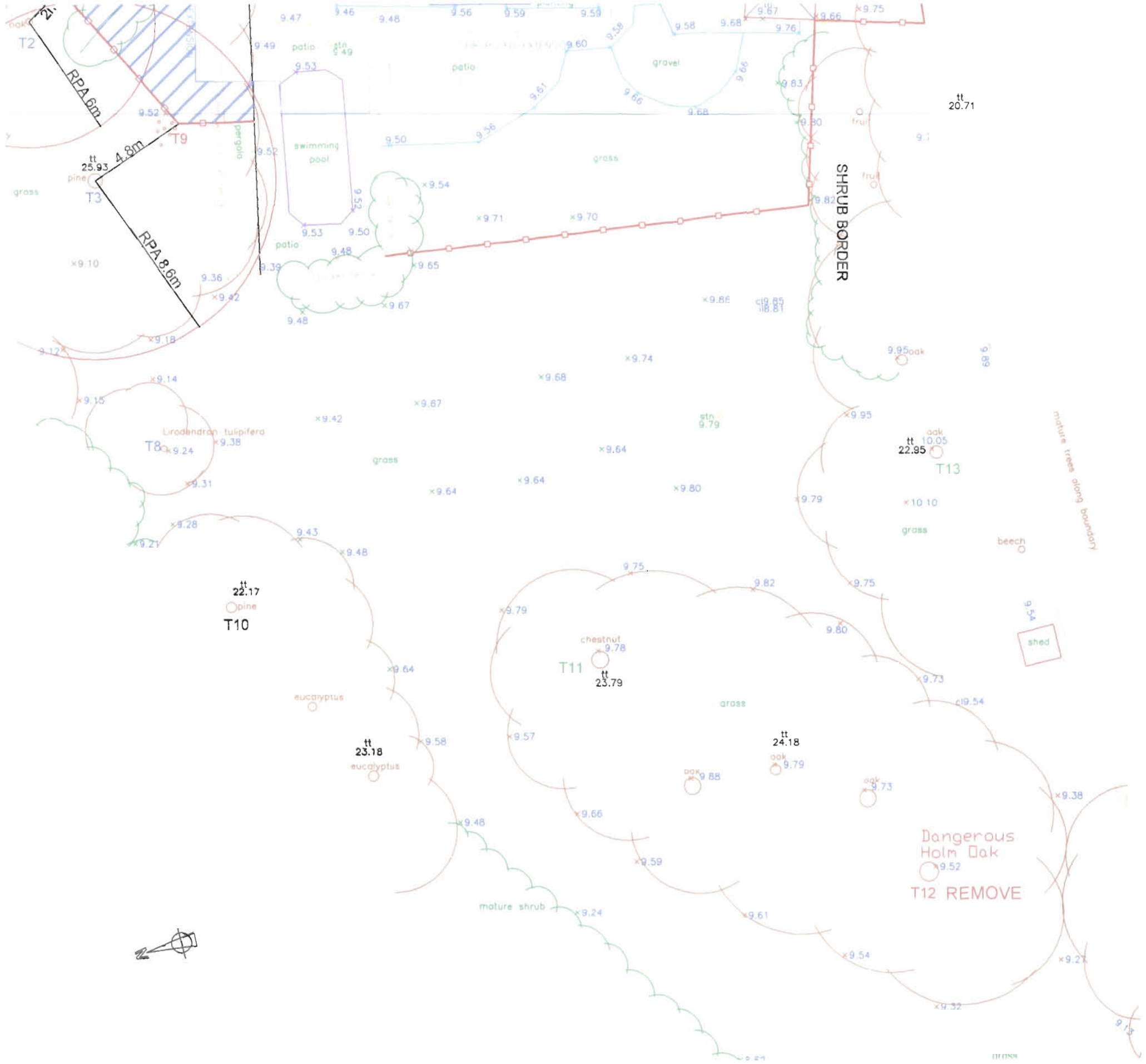

KEY

Tree Protection Fence
HERAS PANELS ON BLOCKS

BS5837 FIG 3 FENCE WITHIN A ROOT PROTECTION AREA. SCAFFOLD BOARDS LAID OVER COMPRESSIBLE LAYER, ON GEOTEXTILE MEMBRANE.

T1 Tree colour according to BS5837:2005.Category A. Green
BS5837:2005.Category B. Blue
BS5837:2005.Category C. Grey
(shown black on this plan)
BS5837:2005.Category R. Red

From an original topographical plan supplied by
P Stubbington Land Surveys Ltd
DATED: MARCH 2010

NOTE:
Do not scale from this plan.
All measurements to be verified on site.

Drawing Title:
TREE PROTECTION PLAN
(T10 TO T13)

HAMBLE CLIFF LODGE
HAMBLE

Scale:	1:200
Date:	14.06.2010
Drawn By:	HNR
Dwg No:	002: T10 TO T13

Tree Liability in the South
Arboricultural Consultants

Three Gables, Shobley
Ringwood, Hampshire
BH24 3HT
info@treeliability.co.uk
Tel: 01425 476965 Mob:07875 842399

APPENDIX FOUR

Sample Development Period Supervision Form

Name of site: **Site Supervisor:**
Arboriculturalist: *Tree Liability in the South* Name of Building firm:

A copy of this form has been submitted to the client as part of the Impact and Method Report. This form should be passed on to the chosen building firm. The Impact and Method Statement should be readily available on site and the Site Supervisor should contact an Arboriculturalist to arrange programme of meetings.

Programme of meetings	When	Why	Remedies
Ist meeting **Date .....**	Before start contact an Arboriculturalist	Ensure Method Statement is seen To discuss required steps in Method Statement	
2nd meeting **Date .....**	Once fencing is in place (or after trees have been taken out)	To check correct positioning of fencing and to discuss configuration of fencing for demolition purposes. Hard surfacing to be retained if stipulated.	
3rd meeting **Date .....**	At start of Construction	To check if fencing is in position as per original Tree Protection Plan. To ensure new planting areas are protected from compaction.	
4th meeting **Date .....**	Mid-construction	To ensure fencing remains in place. To ensure hard surfacing is retained as per Method Statement.	
5th meeting **Date .....**	When property has been built but before hard soft landscaping commences	To ensure that the no new additions have been made on site that are not subject to approval of the Method Statement The method of removing hard surfacing and returning ground to soft landscaping is being carried out as per Method Statement	
6th meeting **Date .....**	When all hard landscaping is complete and tree protection fencing has been removed PRIOR to new planting and soft landscaping	To discuss ground preparation for new planting and to ensure specification of any new trees being planted, is met as per Landscape and Planting Scheme approved (if applicable) .	

Signature of Local authority's representative agreeing all works have complied with per the Planning consent

Name and designation _____Date _____