Tree Survey Report to BS5837:2012



Proposed Development at Alpha Park, Electron Way, Chandlers Ford, Eastleigh, SO53 4SE

January 2015

Revision A – 7th January 2016

Prepared by

Encon Associates Limited
10 Chapel Lane
Arnold
Nottingham
NG5 7DR

A2403

Date of Report:	January 2016
Report Reference:	A2403 – Revision A
Issued by:	MJB
Checked by:	GM

Contents

Contents 3
Summary 4
1 Introduction 6
2 Limitations & Methodology 7
Third Party Liability 7
Subsistence Risk 7
Survey Methodology 8
3 Project Requirements & Site Overview 10
The Site 10
Proposed Development 11
Tree Removal 11
4 Baseline Factors 12
Tree Preservation Orders (TPO) or Conservation Area (CA) Designation 12
Existing Trees on Site 12
Summary of Significance of Site Tree Cover 13
Root Protection Area (RPA) 13
5 Arboricultural Implications Assessment 14
Infrastructure Requirements - Highway Sightlines, Lighting, CCTV, Services etc 20
6 Tree Protection Measures 21
7 Mitigating Tree Loss & New Tree Planting 22
8 Post Development Pressure 22
9 Conclusions 22
10 Recommendations 23
Appendix A - Schedule of Trees 25
Appendix B - Tree Survey Drawings 26
Appendix C – Arboricultural Method Statement 27
Appendix D - Photographic Record 35

Summary

The trees on this site have been assessed in accordance with BS 5837:2012 "Trees in relation to design, demolition and construction - Recommendations".

The proposal is for the construction of a proposed employment development consisting of the erection of industrial/distribution units (B1(c)/B2/B8) including access and servicing arrangements, car parking, landscaping and associated works.

The application site is dissected by the administrative boundaries of Eastleigh Borough Council (EBC) and Test Valley Borough Council (TVBC). Duplicate applications have been submitted to each Local Planning Authority with EBC being the lead authority as the majority of the site falls under their jurisdiction. Planning Consent has been granted by EBC for the area of development within their administration.

This report has been revised to reflect the changes to the development layout and includes an Arboricultural Method Statement regarding the installation of the acoustic fencing as requested by TVBC.

42 individual trees and 21 groups of trees in proximity to the proposed development works have been included in this survey report. The trees are located mainly around the perimeter of the site with some mature trees within central areas of the site. There are no trees covered by Tree Preservation Orders (TPOs) within the application boundary, however the belt of trees beyond the western and northern boundary of the site within Test Valley and Eastleigh are protected by an "Area TPO".

None of the trees have been classified as A1 category although there are several category B2 trees, in good condition. The development proposals require the removal of 25 individual trees and 5 groups. Of the other trees, most are of sufficient distance from the construction works to be retained, however several trees are within close proximity to the

new development beyond the northern and western boundary whose canopies are overhanging into the site will require pruning to facilitate construction of the buildings. These trees are all located within the Tree Preservation Area and will require permission from the Local Authority and approval of an “Application for Tree Works”.

Of the 25 trees which require removal to facilitate the construction of the new development, 12 are category B2 "trees of moderate quality, mainly landscape qualities within groups or woodland". 13 individual trees and 5 groups are low grade, category C2 specimens ie "unremarkable trees of limited merit or impaired condition" or young, insignificant trees. No grade ‘A’ trees will require removal. The development boundary extends close to the existing trees beyond the perimeter of the site, however, in most cases sufficient off-set has been allowed to ensure the existing trees outside the application site are unaffected by the construction of the units. Where trees are located closer to the boundary, careful hand digging is required to ensure the roots are protected and the tree is successfully retained in accordance with the Arboricultural Method Statement appended to this report.

A Landscaping Plan has been prepared for the site as a whole which includes the planting of several new individual trees, some of which are specified as large specimens to provide instant visual enhancement and compensation for the loss of the existing trees on site.

To conclude, despite the need for 25 individual trees and 5 groups to be removed to enable the new development to be constructed, the majority of existing trees around the perimeter of the site will be retained. The visual amenity and screening qualities of the belt of existing protected woodland to the northern and western boundaries between the application site and the adjacent housing will not be affected.

There are no reasons in arboricultural terms, why the development should not proceed.

1 Introduction

1.1 The advice contained within this survey report has been prepared for Bericote Properties Limited in respect of existing trees within the existing site and in proximity to the employment development proposed for Alpha Park, Chandlers Ford in order to:

- Assess the quality of the trees in proximity to the proposed construction works
- Provide an *Arboricultural Assessment* with regard to the proposals
- Recommend measures which will suitably protect retained trees during the construction process
- Recommend other arboricultural works that may be required to ensure the longevity of the remaining trees on site after completion of the development
- Recommendations for landscaping proposals

1.2 Following the initial site visit, preparation of the tree survey and discussion period, the following arboricultural information is provided.

1.3 The report is based on the following drawings and documents, which have been supplied by the client or their agent and the local authority:

- Topographical Survey drawing reference 17526 produced by MK Surveys, dated September 2012
- Site Plan drawing reference 13123 F029 A produced by UMC Architects, dated 20 October 2015
- Guidelines for the planning, installation and maintenance of utility apparatus in proximity to trees produced by NJUG, dated 16 November 2007
- BS3998 2010: Tree Work - Recommendations

2 Limitations & Methodology

2.1 The survey is concerned with the arboricultural aspects of the site only. The trees, on site have been surveyed and classified in accordance with BS 5837:2012 "Trees in relation to design, demolition and construction - Recommendations".

2.2 The survey was undertaken using the Visual Tree Assessment (VTA) methodology to conduct a preliminary assessment of the above ground portion of the tree.

2.3 Trees are large dynamic organisms whose health and condition can change rapidly, therefore due to their changing nature and other site considerations, this report and any recommendations made are valid for the 12 month period following the site survey which was conducted on 20 January 2015. After a period of 5 years, the information in this survey should not be relied upon.

Third Party Liability

2.4 The limit of Encon Associates Limited indemnity over any matter arising out of this report extends only to the instructing client, Bericote Properties Limited. Encon Associates Limited cannot be held liable for any third party claim that arises following this report.

Subsistence Risk

2.5 This report is primarily concerned with the condition of existing trees and the application of current guidance for their retention. Any discussion of soil characteristics is only presented where this may have a direct effect on tree growth. This report does not seek to address the specific area of subsidence risk assessment or damage to existing buildings or structures. Guidance is also provided where relevant, with regards to locating new trees in proximity to the development.

Survey Methodology

2.6 The survey was undertaken from ground level with the aid of binoculars where necessary.

2.7 No aerial inspection nor invasive probing or drilling has been undertaken. No excavations were carried out nor soil or root samples taken.

2.8 The height of each subject tree was verified against those values provided on the topographical survey drawing.

2.9 The canopy spread of each subject tree was measured on four compass points using measuring tape - where access was difficult, eg for trees off site, the spread was estimated.

2.10 The locations of the trees have been taken from the Topographical Survey drawing which locates the GPS position of each tree on site. The locations were visually verified during our visit and it is confirmed their positions appear to be accurate.

2.11 The information contained within the "Schedule of Trees" includes the following for each surveyed tree:

1 **Tree reference number** – cross referenced with the Tree Location Plan drawing number A2403-1, 2, 3 and 4, the Tree Constraints Plan A2403-5 and Tree Removal Plan A2403-6

2 **Species** – have been given their common and botanical name where specifically known

3 **Height** – have been verified against the topographical data provided

4 **Stem diameter** – have been calculated by measuring the circumference at a height of 1.5m from ground level to determine the diameter

5 **Branch spread** – the circles indicated on the tree survey plan are a representation of the overall spread of the crown in each compass direction

6 **Height of crown clearance** – given in metres above adjacent ground level

7 **Age class** – young (YNG) up to 10 years, semi-mature (SM) 1/3 life expectancy, early mature (EM) 2/3 life expectancy, mature (M) over 2/3 life expectancy, over mature (OM) declining/moribund, veteran (V) exceptionally old tree at the end of its life

8 **Condition & Comments** – good (G) sound tree needing little or no attention, fair (F) minor but rectifiable defects, poor (P) major structural and/or physiological defects that would be inappropriate to retain and/or expensive, dead (D) no longer alive or those dying and unlikely to recover. General observations on 'physiological/structural condition' and 'preliminary management' is also provided

9 **Estimated remaining contribution** – in years eg less than 10, 10-20, 20-40, over 40

10 **Category grading** – have been given a grade to classify the quality of each tree based on the Condition Classes and subcategories given overleaf

11 **RPA** – Protective measures as per BS 5837 section 4.6 which states that an area based on a radius equal to 12 times the stem diameter should be protected against damage to roots known as the "Root Protection Area" (RPA) given in m^2. A radius has also been given shown around each tree on the drawing.

2.12 Category grading for the assessment of tree quality (in accordance with Table 1 "Cascade chart for tree quality assessment" within BS 5837:2012) is described below:

U Trees unsuitable for retention - Those in such a condition that they cannot be realistically be retained as living trees in the context of the current land use for longer than 10 years

A Trees of high quality - With an estimated remaining life expectancy of at least 40+ years

B Trees of moderate quality - With an estimated remaining life expectancy of at least 20-40 years

C Trees of low quality - with an estimated remaining life expectancy of at least 10-20 years, or young trees with a stem diameter below 150mm

2.13 Subcategories grading for the assessment of tree quality (in accordance with Table 1 "Cascade chart for tree quality assessment" within BS 5837:2012) is described below:

1 Mainly arboricultural qualities - Trees that are a particularly good example of their species, especially if rare or unusual

2 Mainly landscape qualities - Trees, groups or woodlands of particular visual as arboricultural and/or landscape features

3 Mainly cultural values, including conservation - Trees, groups or woodlands of significant conservation, historical, commemorative or other value eg veteran trees or wood-pasture

For full description of subcategories, refer to Table 1, page 9 of BS 5837:2012

3 Project Requirements & Site Overview

The Site

3.1 The existing site currently comprises a 1980's manufacturing facility and two storey office building and further extension added in 2000. The unit is currently stripped out and is of steel portal frame construction with panel cladding under a pitched steel roof.

3.2 The site is bounded by other industrial/commercial buildings to the east and south and residential estates to the north and west. There is a broad belt of woodland

with a footpath/cycle way which forms a green spine separating the industrial estate from housing.

3.3 There is a single large building located centrally with a number of car parking areas and services yards around the outside. Vehicular and pedestrian access to the site is via entrances from Electron Way on the eastern boundary and School Close on the south-western corner of the application site.

3.4 The site as a whole is located within an industrial estate to the west of Bournemouth Road located to the south west of Chandlers Ford.

Proposed Development

3.5 The proposed works entail the construction of a proposed employment development consisting of the erection of industrial/distribution units (B1(c)/B2/B8) including access and servicing arrangements, car parking, landscaping and associated works.

3.6 The existing buildings will be demolished under a separate Prior Approval Notification of Demolition and is not part of this application.

Tree Removal

3.7 Construction of the new buildings and externals will require the removal of 25 individual trees and 5 groups within proximity of the construction works. 12 are category B2 "trees of moderate quality, mainly landscape qualities within groups or woodland" and 13 are low grade, category C2 specimens ie "unremarkable trees of limited merit or impaired condition" or young, insignificant trees. A further 5 groups of category C2 trees will also require removal.

3.8 None of the trees have been classified as A1 category. Of the remaining trees, most are of sufficient distance from the construction works to be retained. The development boundary extends close to the existing trees beyond the perimeter of the site, however, in most cases sufficient off-set has been allowed to ensure the

existing trees outside the application site are unaffected by the construction of the units. Where trees are located closer to the boundary, careful hand digging is required to ensure the roots are protected and the tree is successfully retained in accordance with the Arboricultural Method Statement appended to this report.

3.9 For all other trees retained, details of tree locations and Root Protection Area (RPA) are provided on Tree Location Plan and Tree Constraints Plan (TCP) appended to this report. Drawing A2403-6 also shows the trees to be removed.

4 Baseline Factors

Tree Preservation Orders (TPO) or Conservation Area (CA) Designation

4.1 The site falls within the planning jurisdiction of Eastleigh Borough Council and Test Valley Borough Council. The application site is dissected by the administrative boundaries of the two Council's and therefore duplicate applications have been submitted to each Local Planning Authority. The majority of the site falls under the jurisdiction of EBC who are the lead authority for this application. The site is not within a local Conservation Area. None of the trees within the application boundary are subject to individual Tree Preservation Orders, however the belt of trees to the north and west of the site is subject to an Area TPO as confirmed by correspondence from Test Valley Borough Council and a search of data.gov.uk Eastleigh Tree Preservation Orders.

Existing Trees on Site

4.2 42 individual trees and 21 groups of trees in proximity of the proposed development works have been included in this survey. The trees are located mainly around the perimeter of the site with some mature trees within central areas of the site.

4.3 Other trees on site, including those with stems below the 75mm requirement for inclusion have not been surveyed.

4.4 A schedule of trees and their condition including their category for retention is attached in Appendix A.

Summary of Significance of Site Tree Cover

4.5 The existing site tree cover is summarised as follows:

BS:5837 Category	Number of Individual Trees	% of total tree cover	Proposed for Removal
A	0	0%	0
B	19	45%	12
C	23	55%	13
U	0	0%	0
TOTAL	42	100%	25

Root Protection Area (RPA)

4.6 The Root Protection Area (RPA) of a tree is defined in BS5837 as the area surrounding the trunk that contains sufficient rooting volume to ensure the survival of the tree and is calculated as an area based on the stem diameter of the tree.

4.7 The RPA's have been calculated in accordance with BS5837, and are detailed in the Tree Schedule located in Appendix A of this report. Where ground constraints have, or are likely to have, had an effect on tree root development, for example, where level changes or changes in rooting medium eg heavily compacted ground, areas of hard standing etc, have influenced tree root growth, the RPA has been adjusted accordingly from the starting point of a circle.

4.8 Detailed analysis of the ground conditions have not been carried out, however a visual assessment concluded that the trees appear to be growing in good, un-compacted ground, likely to consist of decent soils and growing medium. A number of trees are growing less than 1.0m away from paved areas such as tarmac surfaced car park areas, playgrounds or footpaths, which is likely to have influenced the morphology and disposition of their root systems. Other trees are growing freely within existing grassed areas, some distance from areas of hard standing. Most of the trees are growing within areas of vegetation including woodland, ornamental shrub beds and mown grass.

4.9 Tree root systems are typically concentrated within the uppermost 600mm of the soil, although it may be deeper within the dense mass of roots and soil closer to the base of the tree. The development of the roots are influenced by the availability of water, nutrients, oxygen and soil penetrability ie how compacted the soil is and therefore the root spread does not generally show the symmetry seen in the branch system. The trees on this site are likely to have been influenced by their proximity to surrounding paved areas and the likely compacted ground conditions. However, some of the trees have been able to mature into reasonable, albeit some with minor defects and decay.

5 Arboricultural Implications Assessment

5.1 This section considers the implications that the proposed development will have upon the existing trees on the site and provide advice on solutions to any implications to ensure those trees identified as worthy of retention are safeguarded.

5.2 The development proposals require the removal of 25 individual trees and 5 groups in total. 17 of the trees identified for retention as part of the proposals, are mostly in fair to good condition and are worthy of retention, with some in need of attention to remove dead/defective limbs, crown lifting or a general pruning.

5.3 The following table provides details on each tree in terms of its retention, removal or works required to safeguard trees during construction (highlighted in orange):

Tree Ref	Species	Category Grading	Remove/Retain	Comments & Recommendations
T1	Birch	B2	Remove	Located in area of new car park
T2	Birch	B2	Remove	Located in area of new car park
T3	Birch	B2	Remove	Located in area of new car park
T4	Birch	B2	Remove	Located in area of new car park
T5	Birch	B2	Remove	Located in area of new car park
T6	Alder	B2	Remove	Located in area of new car park
T7	Alder	B2	Remove	Located in area of new car park
T8	Ash	B2	Remove	Located in area of new car park
G1	Alder	B2	Retain	Located beyond eastern boundary
T9	Birch	C2	Remove	Located close to area of new service yard
G2	Alder	B2	Retain	Located beyond northern boundary
T10	Alder	B2	Retain	Located beyond northern boundary
G3	Alder	B2	Retain	Located beyond northern boundary
T11	Oak	B2	Retain	Located within the northern boundary. Crown lifting required to remove encroaching branches to prevent conflict with Unit 3
T12	Ash	B2	Remove	Located within footprint of new Unit 3
T13	Ash	B2	Remove	Located within footprint of new Unit 3
T14	Alder	C2	Remove	Located within footprint of new Unit 3
G4	Alder	B2	Retain	Located beyond northern boundary
T15	Oak	C2	Retain	Located beyond northern boundary outside the site. Crown lifting required to remove encroaching branches to prevent conflict with Unit 3

Tree Ref	Species	Category Grading	Remove/Retain	Comments & Recommendations
T16	Maple	C2	Remove	Located within the northern boundary
T17	Alder	B2	Remove	Located within perimeter footpath to new Unit 2
G5	Alder	B2	Retain	Located beyond northern boundary outside the site. Crown lifting required to remove encroaching branches to prevent conflict with Unit 2
T18	Alder	C2	Retain	Located beyond northern boundary outside the site. Crown lifting required to remove encroaching branches to prevent conflict with Unit 2
T19	Alder	C2	Remove	Located within the northern boundary.
G6	Alder	B2	Retain	Located beyond northern boundary outside the site. Crown lifting required to remove encroaching branches to prevent conflict with Unit 2
T20	Ash	C2	Remove	Located within the northern boundary.
T21	Ash	C2	Remove	Located close to new service yard area
T22	Birch	C2	Remove	Located close to new service yard area
T23	Ash	C2	Remove	Located close to new service yard area
T24	Alder	C2	Remove	Located within new service yard area
T25	Alder	C2	Remove	Located within new service yard area
T26	Alder	B2	Remove	Located within new service yard area
G7	Alder	B2	Retain	Located beyond northern boundary outside the site. Crown lifting required to remove encroaching branches to prevent conflict with the covered service yard to Unit 2

Tree Ref	Species	Category Grading	Remove/Retain	Comments & Recommendations
T27	Oak	C2	Retain	Located beyond northern boundary close to new acoustic fencing to be installed in accordance with Arboricultural Method Statement
T28	Alder	C2	Retain	Located beyond northern boundary close to new acoustic fencing to be installed in accordance with Arboricultural Method Statement
T29	Alder	C2	Retain	Located beyond northern boundary close to new acoustic fencing to be installed in accordance with Arboricultural Method Statement
T30	Willow	C2	Retain	Located beyond northern boundary close to new acoustic fencing to be installed in accordance with Arboricultural Method Statement
G8	Alder	B2	Retain	Located beyond western boundary
T31	Alder	C2	Retain	Located beyond western boundary
T32	Alder	C2	Retain	Located beyond western boundary
G9	Birch	C2	Retain	Located beyond western boundary outside the site. Crown lifting required to remove encroaching branches to prevent conflict with Unit 1
T33	Oak	C2	Retain	Located beyond western boundary outside the site. Crown lifting required to remove encroaching branches to prevent conflict with Unit 1
T34	Birch	C2	Remove	Located within perimeter footpath to new Unit 1
G10	Birch	C2	Retain	Located beyond western boundary
T35	Oak	C2	Remove	Located in area of new car park

Tree Ref	Species	Category Grading	Remove/Retain	Comments & Recommendations
G11	Birch	C2	Retain	Located in area of landscaping to southern boundary around new car park area
T36	Ash	B2	Retain	Located in area of landscaping to southern boundary around new car park area
G12	Ash	B2	Retain	Located in area of landscaping to southern boundary adjacent to new site entrance
T37	Beech	B2	Retain	Located in area of landscaping to southern boundary adjacent to new site entrance
G13	Sycamore	C2	Remove	Located adjacent to new service yard in landscape strip
T38	Ash	B2	Retain	Located in landscape strip adjacent to new service yard
T39	Birch	C2	Retain	Located in landscape strip adjacent to new service yard
G14	Birch/Alder	C2	Retain	Located adjacent to new service yard in landscape strip
T40	False Acacia	C2	Remove	Located within new service yard
G15	Maple	C2	Remove	Located within new service yard
G16	False Acacia	C2	Remove	Located in area of new access road into the site
G17	False Acacia	C2	Remove	Located in area of new car park
G18	False Acacia	C2	Remove	Located in area of new car park
T41	Sycamore	B2	Retain	Located along the southern boundary adjacent to the new car park. Careful hand digging required

Tree Ref	Species	Category Grading	Remove/Retain	Comments & Recommendations
G19	Rowan	C2	Retain	Located along the southern boundary adjacent to the new car park. Careful hand digging required
G20	Cherry	C2	Retain	Located within existing group of trees within grass verge
G21	Cyprus sp	C2	Retain	Located within existing group of trees within grass verge
T42	Plane	C2	Retain	Located within existing group of trees within grass verge

5.4 Pruning work is required to 14 trees and groups of trees whose canopies are overhanging the site boundary (highlighted in orange in the table above) and would otherwise conflict with the proposed units. These trees are all located beyond the site boundary within the Tree Preservation Area. Works to these trees will require permission from the Local Authority and approval of an "Application for Tree Works" (to be submitted).

5.5 To conclude, construction of the new buildings and externals will require the removal of 25 individual trees and 5 groups of which 13 are grade C2 trees and 12 are grade B2 trees. There are no grade A trees on the site. The 5 groups of trees requiring removal are all grade C2.

Infrastructure Requirements - Highway Sightlines, Lighting, CCTV, Services etc

5.6 The location and species selection for the new tree planting should be carefully coordinated with other aspects of the design including street lighting, CCTV, underground and overhead service routes and avoidance of physical obstruction or damage should all be taken into account. Due consideration for future growth and

periodic maintenance requirements are also necessary for successful integration of existing trees and/or new tree planting.

5.7 The installation of services within the rooting zones of trees can have a large detrimental impact on the long-term survival of retained trees leading to their unnecessary loss or root failure in high winds. No services should be installed within the RPA of any trees to be retained. Likewise, new tree planting should not be located where they might obstruct overhead power lines or cables. Early consultation and cooperation between the developer and utility companies is essential and proposed service routes should be coordinated with the landscape design proposals.

5.8 Undisclosed locating of above ground services, CCTV cameras, electrical substations, refuse stores, lighting and other infrastructure requirements can lead to unnecessary pruning of tree crowns or root loss during or post development. Likewise, underground apparatus should be ducted or otherwise protected at the time of construction, including common service trenches to minimise land take, facilitate future maintenance and enable trees to be planted nearby without conflict.

6 Tree Protection Measures

6.1 The existing trees on the site identified for retention should be protected from damage during construction operations by fencing them off from machinery circulation routes. The distance from some of the trees to the construction activity is such that damage is unlikely, however to ensure construction vehicles are prevented from unwittingly travelling too close to the trees and causing damage to overhanging branches or compaction of the root zone, protective fencing as detailed in the Appendix of this report should be erected around each area of trees. Heras fencing panels should also be erected around any new tree planting work to demark

the Root Protection Area (RPA) should they be planted prior to the completion of the construction works.

7 Mitigating Tree Loss & New Tree Planting

7.1 The landscape proposals include new tree planting as part of the final development. The presence of the existing woodland to the north of the site offers significant screening and shelter and provides a buffer between the site and the surrounding residential areas. The industrial nature of the proposed site use does not accord with the presence of large quantities of trees, however strategically placed specimen trees will enhance the environment and visual amenity of the site.

7.2 A Landscaping Plan has been prepared for the site as a whole which includes the planting of several new individual trees, some of which are specified as large specimens to provide instant visual enhancement and compensation for the loss of the existing trees on site.

8 Post Development Pressure

8.1 The proposed construction activities on site are of a significant nature and will naturally have an impact on the site but the distance of the new buildings from the existing trees to be retained means future impact will be minimal.

8.2 In consideration of these matters, there will be no appreciable post development pressure, and certainly none that would oblige the Council to give consent to inappropriate works.

9 Conclusions

9.1 Construction of the new buildings and externals will require the removal of 25 individual trees. 13 are grade C2 trees and 12 are grade B2 trees. There are no grade A trees on the site. There are also a further 5 groups of trees requiring

removal, all of which are grade C2 of low arboricultural value. The landscaping proposals include the planting of several new individual trees, specified as large specimens to provide instant visual enhancement, which will compensate for the loss of some of the existing trees to make way for this development.

9.2 The proposals will safeguard all other trees some of which are close to new construction and fencing which should be carried out with extreme caution, including hand digging in proximity to the RPA to prevent disturbance to the trees and their roots.

10 Recommendations

10.1 The tree protection measures provided with the Arboricultural Method Statement within Appendix C should be applied to all existing trees to be retained.

10.2 The part of a tree most susceptible to damage is the root system and therefore no excavations should be carried out with machinery which could damage or sever major root.

10.3 Any excavations within the root protection area should be carried out carefully by hand, avoiding damage to the protective bark covering larger roots. Roots, whilst exposed, should be wrapped in dry, clean hessian sacking to prevent desiccation and to protect from rapid temperature changes.

10.4 Roots smaller than 25mm diameter may be pruned back, preferably to a side branch, using a proprietary cutting tool, such as secateurs or handsaws and carried out by an experience contractor with experience of working with trees. Roots larger than 25mm should not be severed as this will affect the health and stability of the tree. Prior to backfilling the excavation, the hessian wrapping should be removed and the retained roots should be surrounded with sharp sand (builder's sand should not be used because of high salt content which is toxic to tree roots) or other loose granular fill, before soil or other material is replaced and the surfacing works carried out.

The material must be free of contaminants and other foreign objects which may potentially injure the roots.

10.5 The development should be carried out in the following order:

I. Tree protection fencing installed

II. Construction of new buildings and surfacing

III. Removal of tree protection fence

IV. Planting of new trees and implementation of proposed landscape scheme

10.6 Tree work should be undertaken by trained and competent personnel to current Industry standards and guidance, including BS3998:2010 Recommendations for Tree Work to safeguard the general public and site operatives alike.

10.7 The existing trees identified for removal should be felled outside the bird nesting season which runs from March to August inclusively to avoid destroying nesting birds which are protected by law. If the tree clearance work cannot be done outside of the bird breeding season, then the trees should be checked for active nests by an ecologist prior to felling. Should any nests be found to be in use at the time of the inspection, the trees in which they are nesting will need to be left undisturbed until the young have fledge and left the nest. If no nests are found, the trees can be safely removed.

Appendix A - Schedule of Trees

Tree Schedule

Site: Alpha Park, Chandlers Ford **Date:** 20th January 2015 **Weather:** Cold, Frosty

Ref	Species	Height (m)	Stem Diameter (mm)	Branch spread (m) N	E	S	W	Height crown clearance (m)	Age class	Condition & Comments	Years left	Category grading	RPA (m^2)	RPA radius
T1	Silver Birch (Betula pendula)	10	450	3	3	3	1	3	M	Reasonable trees in shrub bed planting some ivy growth.	20+	B2	92	5.40
T2	Silver Birch (Betula pendula)	10	300	3	3	3	1	3	M	Reasonable trees in shrub bed planting some ivy growth.	20+	B2	41	3.60
T3	Silver Birch (Betula pendula)	10	300	3	3	3	1	3	M	Reasonable trees in shrub bed planting some ivy growth.	20+	B2	41	3.60
T4	Silver Birch (Betula pendula)	10	300	3	3	3	1	3	M	Reasonable trees in shrub bed planting some ivy growth.	20+	B2	41	3.60
T5	Silver Birch (Betula pendula)	10	300	3	3	3	1	3	M	Reasonable trees in shrub bed planting some ivy growth.	20+	B2	41	3.60
T6	Alder (Alnus glutinosa)	10	500	4	3	4	4	1	M	Reasonable tree. Needs bramble growth clearing at the base.	20+	B2	113	6.00
T7	Alder (Alnus glutinosa)	10	500	4	3	4	4	1	M	Reasonable tree. Needs bramble growth clearing at the base.	20+	B2	113	6.00

Tree Schedule

Site: Alpha Park, Chandlers Ford **Date:** 20th January 2015 **Weather:** Cold, Frosty

Ref	Species	Height (m)	Stem Diameter (mm)	Branch spread (m) N	E	S	W	Height crown clearance (m)	Age class	Condition & Comments	Years left	Category grading	RPA (m^2)	RPA radius
T8	Ash (Fraxinus excelsior)	10	450	3	4	3	3	3	M	Reasonable tree. Needs bramble growth clearing at the base.	20+	B2	92	5.40
G1	Alder (Alnus glutinosa)	12	500	5	5	5	5	6	M	Group of 60+ trees, forming a dense shelter belt.	20+	B2	113	6.00
T9	Silver Birch (Betula pendula)	15	500	6	6	4	5	7	OM	Interesting specimen. Actually 2 trees growing close together.	<20	C2	113	6.00
G2	Alder (Alnus glutinosa)	14	450	8	8	8	8	3	M	Group of 12+ trees, part of a belt of woodland along northern boundary.	20+	B2	92	5.40
T10	Alder (Alnus glutinosa)	15	500	6	6	4	5	4	M	Reasonable specimen located outside site boundary.	20+	B2	113	6.00
G3	Alder (Alnus glutinosa)	15	400	7	7	7	7	3	M	Group of 5 trees, part of a belt of woodland along northern boundary.	20+	B2	72	4.80
T11	Oak (Quercus sp)	12	550	6	6	6	6	5	M	Reasonable tree, Ivy covering most of canopy.	20+	B2	137	6.60

Tree Schedule

Site: Alpha Park, Chandlers Ford **Date:** 20th January 2015 **Weather:** Cold, Frosty

Ref	Species	Height (m)	Stem Diameter (mm)	Branch spread (m) N	E	S	W	Height crown clearance (m)	Age class	Condition & Comments	Years left	Category grading	RPA (m^2)	RPA radius
T12	Ash (Fraxinus excelsior)	7	150	2	2	3	2	3	SM	Reasonable Tree	20+	B2	10	1.80
T13	Ash (Fraxinus excelsior)	9	150	2	2	3	2	3	SM	Reasonable Tree	20+	B2	10	1.80
T14	Alder (Alnus glutinosa)	9	325	4	3	4	3	2	M	Fair, some die back	<20	C2	48	3.90
G4	Alder (Alnus glutinosa)	10	350	7	7	7	7	4	M	Group of 10 trees, part of a belt of woodland along northern boundary.	20+	B2	55	4.20
T15	Oak (Quercus sp)	16	450	8	8	8	8	4	M	Mature tree in reasonable condition located just boyond the site boundary.	<20	C2	92	5.40
T16	Maple (Acer platanoides)	9	300	5	6	5	4	1.5	SM	Fair, some die back	<20	C2	41	3.60
T17	Alder (Alnus glutinosa)	12	325	6	5	6	5	4	M	Fair, some die back	20+	B2	48	3.90

Tree Schedule

Site: Alpha Park, Chandlers Ford **Date:** 20th January 2015 **Weather:** Cold, Frosty

Ref	Species	Height (m)	Stem Diameter (mm)	Branch spread (m) N	E	S	W	Height crown clearance (m)	Age class	Condition & Comments	Years left	Category grading	RPA (m^2)	RPA radius
G5	Alder (Alnus glutinosa)	12	350	7	7	7	7	3	M	Group of 10 trees, part of a belt of woodland along northern boundary.	20+	B2	55	4.20
T18	Alder (Alnus glutinosa)	12	450	8	8	8	8	6	M	Fair tree located just beyond the site boundary	<20	C2	92	5.40
T19	Alder (Alnus glutinosa)	10	350	6	7	8	6	2	M	Poor condition, broken branches, white patches on bark	<10	C2	55	4.20
G6	Alder (Alnus glutinosa)	15	500	7	7	7	7	7	M	Group of 12 trees, part of a belt of woodland along northern boundary.	20+	B2	113	6.00
T20	Ash (Fraxinus excelsior)	10	450	8	8	7	6	1.8	M	Poor, ivy covered canopy, broken branches.	<20	C2	92	5.40
T21	Ash (Fraxinus excelsior)	10	500	7	8	7	6	1.8	M	Poor, ivy covered canopy, broken branches.	<20	C2	113	6.00
T22	Silver Birch (Betula pendula)	16	350	8	8	7	6	1.8	M	Poor, ivy covered canopy, broken branches.	<20	C2	55	4.20

Tree Schedule

Site: Alpha Park, Chandlers Ford **Date:** 20th January 2015 **Weather:** Cold, Frosty

Ref	Species	Height (m)	Stem Diameter (mm)	Branch spread (m) N	E	S	W	Height crown clearance (m)	Age class	Condition & Comments	Years left	Category grading	RPA (m^2)	RPA radius
T23	Ash (Fraxinus excelsior)	10	350	7	7	6	5	5	M	Reasonable, but leaning to the east.	<20	C2	55	4.20
T24	Alder (Alnus glutinosa)	7	125	3	2	2	3	1.6	YNG	Fair.	<20	C2	7	1.50
T25	Alder (Alnus glutinosa)	12	300	5	6	7	5	3	M	Fair, multi stem, ivy covered canopy.	<20	C2	41	3.60
T26	Alder (Alnus glutinosa)	12	300	6	6	7	6	5	M	Multi stem 3x300 trunks. Good specimen.	20+	B2	41	3.60
G7	Alder (Alnus glutinosa)	14	45	7	7	7	7	5	M	Group of 12 trees, part of a belt of woodland along northern boundary.	20+	B2	1	0.54
T27	Oak (Quercus sp)	14	550	9	9	9	9	7	OM	Large oak tree located just beyond site boundary, reasonable condition	<20	C2	137	6.60
T28	Alder (Alnus glutinosa)	14	400	7	7	7	7	6	M	Fair, ivy covered trunk and lower canopy.	<20	C2	72	4.80

Tree Schedule

Site: Alpha Park, Chandlers Ford **Date:** 20th January 2015 **Weather:** Cold, Frosty

Ref	Species	Height (m)	Stem Diameter (mm)	Branch spread (m) N	E	S	W	Height crown clearance (m)	Age class	Condition & Comments	Years left	Category grading	RPA (m^2)	RPA radius
T29	Alder (Alnus glutinosa)	14	400	7	7	7	7	6	M	Fair, ivy covered trunk and lower canopy.	<20	C2	72	4.80
T30	Willow (Salix sp)	16	550	9	9	9	9	7	OM	Large willow in reasonable condition	<20	C2	137	6.60
G8	Alder (Alnus glutinosa)	15	400	7	7	7	7	6	M	Group of 5 multi stem trees, part of a belt of woodland along northern boundary.	20+	B2	72	4.80
T31	Alder (Alnus glutinosa)	16	350	7	7	7	7	6	M	Reasonable specimen located close to perimiter, just beyond site boundary	<20	C2	55	4.20
G9	Silver Birch (Betula pendula)	14	350	5	5	5	5	6	M	Group of 5, thin silver birch, part of a belt of woodland along northern boundary, fair	<20	C2	55	4.20
T32	Alder (Alnus glutinosa)	16	350	7	7	7	7	2	M	Mult stem, 6+ trunks from the base	<20	C2	55	4.20
T33	Oak (Quercus sp)	18	650	10	10	10	10	7	OM	Large oak tree in latter stages of life	<20	C2	191	7.80

Tree Schedule

Site: Alpha Park, Chandlers Ford **Date:** 20th January 2015 **Weather:** Cold, Frosty

Ref	Species	Height (m)	Stem Diameter (mm)	Branch spread (m) N	E	S	W	Height crown clearance (m)	Age class	Condition & Comments	Years left	Category grading	RPA (m^2)	RPA radius
T34	Silver Birch (Betula pendula)	14	300	8	8	7	8	3	OM	Large, multi stem Birch in twilight years.	<10	C2	41	3.60
G10	Silver Birch (Betula pendula)	12	300	5	5	5	5	6	M	Group of 5, thin silver birch, part of a belt of woodland along northern boundary, fair	<20	C2	41	3.60
T35	Oak (Quercus sp)	12	400	6	6	6	5	3	OM	Poor condition.	<10	C2	72	4.80
G11	Silver Birch (Betula pendula)	12	300	5	5	5	5	4	M	3 trees, reasonable. Ivy in crown, some die back.	<20	C2	41	3.60
T36	Ash (Fraxinus excelsior)	14	400	6	6	7	6	4	M	Fair specimen, some crown die back.	20+	B2	72	4.80
G12	Ash (Fraxinus excelsior)	10	325	5	5	5	5	2	M	Group of 3, fair, Ivy in crown.	20+	B2	48	3.90
T37	Beech (Betula pendula)	7	200	3	3	2	3	1	YNG/SM	Fair tree in early development. Potential to grow.	20+	B2	18	2.40

Tree Schedule

Site: Alpha Park, Chandlers Ford **Date:** 20th January 2015 **Weather:** Cold, Frosty

Ref	Species	Height (m)	Stem Diameter (mm)	Branch spread (m) N	E	S	W	Height crown clearance (m)	Age class	Condition & Comments	Years left	Category grading	RPA (m^2)	RPA radius
G13	Sycamore (Acer pseudoplatanus)	8	300	4	5	4	3	3	M	Group of 5. Fair , offering screening qualities.	20+	C2	41	3.60
T38	Ash (Fraxinus excelsior)	10	400	3	2	3	3	4	M	Reasonable tree, Ivy in crown.	20+	B2	72	4.80
T39	Silver Birch (Betula pendula)	9	300	7	6	5	6	2.5	OM	Poor form, twisted branches.	<20	C2	41	3.60
T40	False Acacia (Robinia pseudoacacia)	12	550	6	7	7	6	3	OM	Reasonable form in twilight of life.	<20	C2	137	6.60
G14	Birch & Ash (Betula pendula & Fraxinus excelsior)	10	300	6	6	6	6	3	M	Reasonable group of 4 trees > (2 Ash 2 Birch).	20+	C2	41	3.60
G15	Maple (Acer platanoides)	9	300	3	3	3	3	3	M	Resonable group of 3 trees.	20	C2	41	3.60
G16	False Acacia (Robinia pseudoacacia)	14	400	5	5	5	5	3	M	Group of 3 trees in twilight years.	<20	C2	72	4.80

Tree Schedule

Site: Alpha Park, Chandlers Ford **Date:** 20th January 2015 **Weather:** Cold, Frosty

Ref	Species	Height (m)	Stem Diameter (mm)	Branch spread (m) N	E	S	W	Height crown clearance (m)	Age class	Condition & Comments	Years left	Category grading	RPA (m^2)	RPA radius
G17	False Acacia (Robinia pseudoacacia)	14	300	3	3	3	3	3	SM	Group of 9 Acacia trees in fair condition.	<20	C2	41	3.60
G18	False Acacia (Robinia pseudoacacia)	6	100	2	1	2	1	1	YNG	Group of 4 young trees in fair condition.	20+	C2	5	1.20
T41	Sycamore (Acer pseudoplatanus)	12	400	6	6	7	6	2.5	M	Good tree, worthy of retention.	20+	B2	72	4.80
G19	Rowan (Sorbus aucuparia)	7	200	3	3	3	3	2	M	Group of 7 rowan trees planted in a row at approximately 4m centres in fair condition	<20	C2	18	2.40
G20	Cherry (Prunus sp)	15	500	6	6	4	5	7	OM	Group of 10 cherry trees planted in rows at approximately 4m centres in fair condition	<20	C2	113	6.00
G21	Cyprus (Cupressus sp)	15	500	6	6	4	5	7	OM	2 evergreens planted close together to appear like one specimen, poor	<20	C2	113	6.00
T42	Oriental Plane (Platanus orientalis)	12	400	6	6	7	6	2.5	M	Good tree with some minor defects. Affected by proximity to other trees. Has a commemorative plaque next to the base which states "Commemorating twenty five years of EMI-MEC Limited Brian Yates Chairman 1983"	20	C2	72	4.80

Appendix B - Tree Survey Drawings

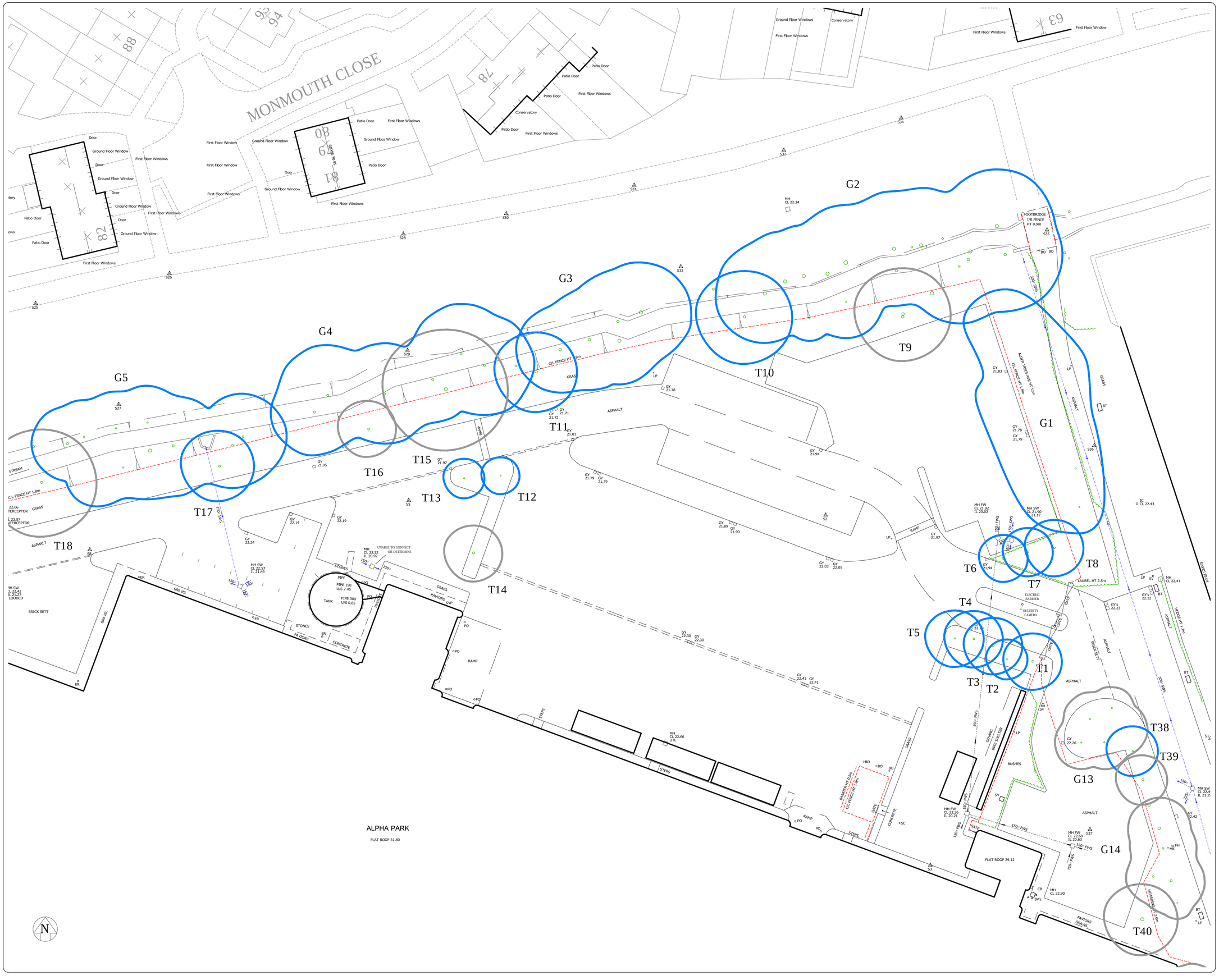

© Encon Associates - DISCLAIMER:

- This drawing is copyright and shall not be reproduced nor used for any other purpose without the written permission of Encon Associates - This drawing must be read in conjunction with all other related drawings and documentation - It is the contractors responsibility to ensure full compliance with the relevant Regulations - Until technical approval has been obtained from the relevant Authorities it should be understood that al drawings issued are PRELIMINARY and NOT for Construction - Should the contractor start site work prior to approval been given, it is entirely at his own risk - Do not scale from this drawing, use figured dimensions only - It is the contractors responsibility to check and verify all dimensions on site - Any discrepancies to be reported to Encon Associates immediately - All survey information is provided by the surveying company and Encon Associates cannot accept any liability for any discrepancies there in - All survey information to be verified on site by Contractor - For our Standard Terms and Conditions, please visit www.enconassociates.co.uk/terms - Alternatively, a hard copy can be posted to you

Notes:

Key to Tree Survey Plan

The RPA (Root Protection Area) ie the zone in which the root system is believed to be concentrated, has been calculated for each tree within the site boundary. The results can be found with the Tree Report.

This drawing is based on the Topographical Survey drawing reference 17526 produced by MK Surveys, dated September 2012 and Site Plan reference 13123 F029 A produced by UMC Architects, dated 20.10.15

This drawing has been produced in response to the following planning condition:

Condition 13

The development shall accord with the Tree Survey Report reference A2403, February 2015. Any Tree Protection Fencing required shall be erected prior to demolition or construction works commencing on site. Once erected no access by vehicles, storage or use of machinery, equipment or materials shall take place within the fenced area. The fencing shall be retained in its approved form for the duration of the work.

T1 — RPA shown as a dashed circle around each tree with the Reference Number

Class A

Class B

Class C

Class U

Rev	Date	Description	Drawn	Checked
A	02.11.15	Updated in line with amended site plan	MJB	GLM

Client
Bericote Properties Limited

Project
Alpha Park
Chandlers Ford
Hampshire

Title
Tree Survey Plan
(Sheet 1 of 4)

Drawing Status
FOR PLANNING APPROVAL

Drawn	MJB	Checked	GM
Date	26.01.15	Scale (A1)	1:250

encon associates
10 Chapel Lane
Arnold
Nottingham
NG5 7DR
T: 0115 987 55 99 E: enquiries@enconassociates.co.uk W: www.enconassociates.co.uk
Environmental Consultants to the Construction Industry
- BREEAM - Code for Sustainable Homes Assessors - Landscape Architecture - Transportation - Life Cycle Costing - Energy Assessment - SAP - EPC - SBEM - Daylight Calculations

Job Number	Drawing Number	Rev
A2403	01	A

© Encon Associates - DISCLAIMER:

- This drawing is copyright and shall not be reproduced nor used for any other purpose without the written permission of Encon Associates - This drawing must be read in conjunction with all other related drawings and documentation - It is the contractors responsibility to ensure full compliance with the relevant Regulations - Until technical approval has been obtained from the relevant Authorities it should be understood that al drawings issued are PRELIMINARY and NOT for Construction - Should the contractor start site work prior to approval been given, it is entirely at his own risk - Do not scale from this drawing, use figured dimensions only - It is the contractors responsibility to check and verify all dimensions on site - Any discrepancies to be reported to Encon Associates immediately - All survey information is provided by the surveying company and Encon Associates cannot accept any liability for any discrepancies there in - All survey information to be verified on site by Contractor - For our Standard Terms and Conditions, please visit www.enconassociates.co.uk/terms - Alternatively, a hard copy can be posted to you

Notes:

Key to Tree Survey Plan

The RPA (Root Protection Area) ie the zone in which the root system is believed to be concentrated, has been calculated for each tree within the site boundary. The results can be found with the Tree Report.

This drawing is based on the Topographical Survey drawing reference 17526 produced by MK Surveys, dated September 2012 and Site Plan reference 13123 F029 A produced by UMC Architects, dated 20.10.15

This drawing has been produced in response to the following planning condition:

Condition 13

The development shall accord with the Tree Survey Report reference A2403, February 2015. Any Tree Protection Fencing required shall be erected prior to demolition or construction works commencing on site. Once erected no access by vehicles, storage or use of machinery, equipment or materials shall take place within the fenced area. The fencing shall be retained in its approved form for the duration of the work.

T1 — RPA shown as a dashed circle around each tree with the Reference Number

Class A

Class B

Class C

Class U

Rev	Date	Description	Drawn	Checked
A	02.11.15	Updated in line with amended site plan	MJB	GLM

Client
Bericote Properties Limited

Project
Alpha Park
Chandlers Ford
Hampshire

Title
Tree Survey Plan
(Sheet 2 of 4)

Drawing Status
FOR PLANNING APPROVAL

Drawn	MJB	Checked	GM
Date	26.01.15	Scale (A1)	1:250

encon associates
10 Chapel Lane
Arnold
Nottingham
NG5 7DR
T: 0115 987 55 99 E: enquiries@enconassociates.co.uk W: www.enconassociates.co.uk
Environmental Consultants to the Construction Industry
- BREEAM - Code for Sustainable Homes Assessors - Landscape Architecture - Transportation - Life Cycle Costing - Energy Assessment - SAP - EPC - SBEM - Daylight Calculations

Job Number	Drawing Number	Rev
A2403	02	A

© Encon Associates - DISCLAIMER:

- This drawing is copyright and shall not be reproduced nor used for any other purpose without the written permission of Encon Associates - This drawing must be read in conjunction with all other related drawings and documentation - It is the contractors responsibility to ensure full compliance with the relevant Regulations - Until technical approval has been obtained from the relevant Authorities it should be understood that al drawings issued are PRELIMINARY and NOT for Construction - Should the contractor start site work prior to approval been given, it is entirely at his own risk - Do not scale from this drawing, use figured dimensions only - It is the contractors responsibility to check and verify all dimensions on site - Any discrepancies to be reported to Encon Associates immediately - All survey information is provided by the surveying company and Encon Associates cannot accept any liability for any discrepancies there in - All survey information to be verified on site by Contractor - For our Standard Terms and Conditions, please visit www.enconassociates.co.uk/terms - Alternatively, a hard copy can be posted to you

Notes:

Key to Tree Survey Plan

The RPA (Root Protection Area) ie the zone in which the root system is believed to be concentrated, has been calculated for each tree within the site boundary. The results can be found with the Tree Report.

This drawing is based on the Topographical Survey drawing reference 17526 produced by MK Surveys, dated September 2012 and Site Plan reference 13123 F029 A produced by UMC Architects, dated 20.10.15

This drawing has been produced in response to the following planning condition:

Condition 13

The development shall accord with the Tree Survey Report reference A2403, February 2015. Any Tree Protection Fencing required shall be erected prior to demolition or construction works commencing on site. Once erected no access by vehicles, storage or use of machinery, equipment or materials shall take place within the fenced area. The fencing shall be retained in its approved form for the duration of the work.

T1 — RPA shown as a dashed circle around each tree with the Reference Number

Class A

Class B

Class C

Class U

Rev	Date	Description	Drawn	Checked
A	02.11.15	Updated in line with amended site plan	MJB	GLM

Client
Bericote Properties Limited

Project
Alpha Park
Chandlers Ford
Hampshire

Title
Tree Survey Plan
(Sheet 3 of 4)

Drawing Status
FOR PLANNING APPROVAL

Drawn	MJB	Checked	GM
Date	26.01.15	Scale (A1)	1:250

encon associates
10 Chapel Lane
Arnold
Nottingham
NG5 7DR
T: 0115 987 55 99 E: enquiries@enconassociates.co.uk W: www.enconassociates.co.uk
Environmental Consultants to the Construction Industry
- BREEAM - Code for Sustainable Homes Assessors - Landscape Architecture - Transportation - Life Cycle Costing - Energy Assessment - SAP - EPC - SBEM - Daylight Calculations

Job Number	Drawing Number	Rev
A2403	03	A

© Encon Associates - DISCLAIMER:

- This drawing is copyright and shall not be reproduced nor used for any other purpose without the written permission of Encon Associates - This drawing must be read in conjunction with all other related drawings and documentation - It is the contractors responsibility to ensure full compliance with the relevant Regulations - Until technical approval has been obtained from the relevant Authorities it should be understood that al drawings issued are PRELIMINARY and NOT for Construction - Should the contractor start site work prior to approval been given, it is entirely at his own risk - Do not scale from this drawing, use figured dimensions only - It is the contractors responsibility to check and verify all dimensions on site - Any discrepancies to be reported to Encon Associates immediately - All survey information is provided by the surveying company and Encon Associates cannot accept any liability for any discrepancies there in - All survey information to be verified on site by Contractor - For our Standard Terms and Conditions, please visit www.enconassociates.co.uk/terms - Alternatively, a hard copy can be posted to you

Notes:

Key to Tree Survey Plan

The RPA (Root Protection Area) ie the zone in which the root system is believed to be concentrated, has been calculated for each tree within the site boundary. The results can be found with the Tree Report.

This drawing is based on the Topographical Survey drawing reference 17526 produced by MK Surveys, dated September 2012 and Site Plan reference 13123 F029 A produced by UMC Architects, dated 20.10.15

This drawing has been produced in response to the following planning condition:

Condition 13

The development shall accord with the Tree Survey Report reference A2403, February 2015. Any Tree Protection Fencing required shall be erected prior to demolition or construction works commencing on site. Once erected no access by vehicles, storage or use of machinery, equipment or materials shall take place within the fenced area. The fencing shall be retained in its approved form for the duration of the work.

T1 — RPA shown as a dashed circle around each tree with the Reference Number

Class A

Class B

Class C

Class U

Rev	Date	Description	Drawn	Checked
A	02.11.15	Updated in line with amended site plan	MJB	GLM

Client
Bericote Properties Limited

Project
Alpha Park
Chandlers Ford
Hampshire

Title
Tree Survey Plan
(Sheet 4 of 4)

Drawing Status
FOR PLANNING APPROVAL

Drawn	MJB	Checked	GM
Date	26.01.15	Scale (A1)	1:250

encon associates
10 Chapel Lane
Arnold
Nottingham
NG5 7DR
T: 0115 987 55 99 E: enquiries@enconassociates.co.uk W: www.enconassociates.co.uk
Environmental Consultants to the Construction Industry
- BREEAM - Code for Sustainable Homes Assessors - Landscape Architecture - Transportation - Life Cycle Costing - Energy Assessment - SAP - EPC - SBEM - Daylight Calculations

Job Number	Drawing Number	Rev
A2403	04	A

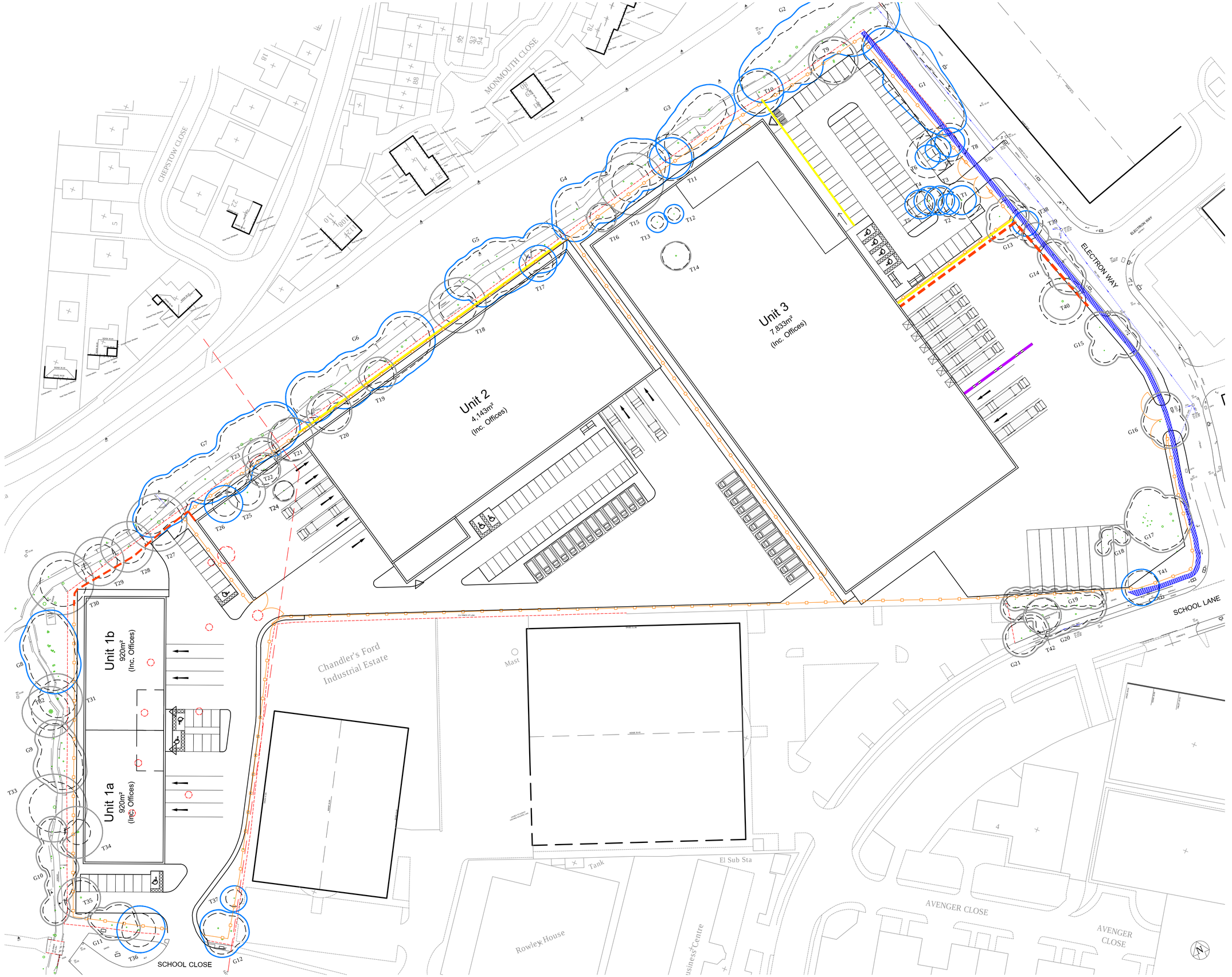

© Encon Associates - DISCLAIMER:

- This drawing is copyright and shall not be reproduced nor used for any other purpose without the written permission of Encon Associates - This drawing must be read in conjunction with all other related drawings and documentation - It is the contractors responsibility to ensure full compliance with the relevant Regulations - Until technical approval has been obtained from the relevant Authorities it should be understood that al drawings issued are PRELIMINARY and NOT for Construction - Should the contractor start site work prior to approval been given, it is entirely at his own risk - Do not scale from this drawing, use figured dimensions only - It is the contractors responsibility to check and verify all dimensions on site - Any discrepancies to be reported to Encon Associates immediately - All survey information is provided by the surveying company and Encon Associates cannot accept any liability for any discrepancies there in - All survey information to be verified on site by Contractor - For our Standard Terms and Conditions, please visit www.enconassociates.co.uk/terms - Alternatively, a hard copy can be posted to you

Notes:

Key to Tree Survey Plan

The RPA (Root Protection Area) ie the zone in which the root system is believed to be concentrated, has been calculated for each tree within the site boundary. The results can be found with the Tree Report.

This drawing is based on the Topographical Survey drawing reference 17526 produced by MK Surveys, dated September 2012 and Site Plan reference 13123 F029 A produced by UMC Architects, dated 20.10.15

This drawing has been produced in response to the following planning condition:

Condition 13

The development shall accord with the Tree Survey Report reference A2403, February 2015. Any Tree Protection Fencing required shall be erected prior to demolition or construction works commencing on site. Once erected no access by vehicles, storage or use of machinery, equipment or materials shall take place within the fenced area. The fencing shall be retained in its approved form for the duration of the work.

T1 — RPA shown as a dashed circle around each tree with the Reference Number

Class A

Class B

Class C

Class U

Rev	Date	Description	Drawn	Checked
A	02.11.15	Updated in line with amended site plan	MJB	GLM

Client
Bericote Properties Limited

Project
Alpha Park
Chandlers Ford
Hampshire

Title
Tree Constraints Plan

Drawing Status
FOR PLANNING APPROVAL

Drawn	MJB	Checked	GM
Date	26.01.15	Scale (A1)	1:500

encon associates
10 Chapel Lane
Arnold
Nottingham
NG5 7DR
T: 0115 987 55 99 E: enquiries@enconassociates.co.uk W: www.enconassociates.co.uk
Environmental Consultants to the Construction Industry
- BREEAM - Code for Sustainable Homes Assessors - Landscape Architecture - Transportation - Life Cycle Costing - Energy Assessment - SAP - EPC - SBEM - Daylight Calculations

Job Number	Drawing Number	Rev
A2403	05	A

© Encon Associates - DISCLAIMER:

- This drawing is copyright and shall not be reproduced nor used for any other purpose without the written permission of Encon Associates - This drawing must be read in conjunction with all other related drawings and documentation - It is the contractors responsibility to ensure full compliance with the relevant Regulations - Until technical approval has been obtained from the relevant Authorities it should be understood that al drawings issued are PRELIMINARY and NOT for Construction - Should the contractor start site work prior to approval been given, it is entirely at his own risk - Do not scale from this drawing, use figured dimensions only - It is the contractors responsibility to check and verify all dimensions on site - Any discrepancies to be reported to Encon Associates immediately - All survey information is provided by the surveying company and Encon Associates cannot accept any liability for any discrepancies there in - All survey information to be verified on site by Contractor - For our Standard Terms and Conditions, please visit www.enconassociates.co.uk/terms - Alternatively, a hard copy can be posted to you

Notes:

Key to Tree Survey Plan

The RPA (Root Protection Area) ie the zone in which the root system is believed to be concentrated, has been calculated for each tree within the site boundary. The results can be found with the Tree Report.

This drawing is based on the Topographical Survey drawing reference 17526 produced by MK Surveys, dated September 2012 and Site Plan reference 13123 F029 A produced by UMC Architects, dated 20.10.15

This drawing has been produced in response to the following planning condition:

Condition 13

The development shall accord with the Tree Survey Report reference A2403, February 2015. Any Tree Protection Fencing required shall be erected prior to demolition or construction works commencing on site. Once erected no access by vehicles, storage or use of machinery, equipment or materials shall take place within the fenced area. The fencing shall be retained in its approved form for the duration of the work.

- RPA shown as a dashed circle around each tree with the Reference Number (T1)
- Class A
- Class B
- Class C
- Class U
- Trees to be removed shown dashed
- Young trees (not included in the Tree Survey) to be removed
- Location of Tree Protection Fencing (as per Tree Survey Report)

Rev	Date	Description	Drawn	Checked
A	02.11.15	Updated in line with amended site plan	MJB	GLM

Client
Bericote Properties Limited

Project
Alpha Park
Chandlers Ford
Hampshire

Title
Tree Removal & Protection Plan

Drawing Status
FOR PLANNING APPROVAL

Drawn	MJB	Checked	GM
Date	26.10.15	Scale (A1)	1:500

encon associates
10 Chapel Lane
Arnold
Nottingham
NG5 7DR
T: 0115 987 55 99 E: enquiries@enconassociates.co.uk W: www.enconassociates.co.uk
Environmental Consultants to the Construction Industry
- BREEAM - Code for Sustainable Homes Assessors - Landscape Architecture - Transportation - Life Cycle Costing - Energy Assessment - SAP - EPC - SBEM - Daylight Calculations

Job Number	Drawing Number	Rev
A2403	06	A

Appendix C – Arboricultural Method Statement

The following Arboricultural Method Statement includes details for the installation of the acoustic fencing as per the requirements of Test Valley Borough Council Tree Officer in accordance with email correspondence with Mr Dermot Cox 26 November 2015.

1.1 **Root Protection Area (RPA)**

The Root Protection Area (RPA) required by the current edition of BS 5837:2012 relates to the stem diameter of each tree when measured at a height of 1.5m from ground level, adjusted where necessary to account for actual rooting patterns on site. The RPAs are to be afforded protection at all times and will be protected by fencing barriers. No works will be undertaken within any RPA that causes compaction to the soil or severance of tree roots.

1.2 There is no planned construction of foundations within any RPA around the existing trees to be retained.

2.0 **Protective Fencing**

A protective fence should be erected prior to the commencement of any site works e.g. before any materials or machinery are brought on site, any construction work starts or any stripping of soil commences. The barrier needs to have signs attached stating that this is a Tree Protection Area and that **no** works are permitted within the barrier. The barrier may only be removed following completion of all construction works.

2.1 The fence is required to be sited in accordance with the TPC. The fence must ideally be constructed as per figure 2 in BS 5837:2012 (see detail at the end of this section) and be fit for the purpose of excluding any construction activity. The construction on site should be excluded from the RPA with 'Heras' type Fencing construction, along with a formal briefing of any work person by the site manager with regards to the contents of this method statement.

3.0 **Precautions in respect of Temporary Works**

If temporary access is required to an RPA then access may only be gained following placement of materials such as concrete slabs or geo-textile fabrics that will spread the weight of any vehicular load and prevent compaction to the soil. For pedestrian movements within any RPA then a single thickness scaffold board on top of a compressible layer laid onto a geotextile fabric may be acceptable.

4.0 **Access Details**

There is no requirement for any special measures related to the retained trees if access for all construction vehicles is kept away from the trees to be retained and stay outside of the RPA.

5.0 **Contractors Car Parking**

This is likely to be within an existing hard standing area onsite. The area designated for parking needs to be away from the area around the trees to be retained.

6.0 **Site Huts and Toilets**

The area designated for site accommodation needs to be away from the area around the trees to be retained.

7.0 **Storage Space**

The storage of materials should ideally be on existing hard standing away from existing trees. The contractor should not store any materials on site within the RPA of an existing tree.

8.0 **Additional Precautions**

No storage of materials or lighting of fires should take place within the RPA. No mixing or storage of materials should take place up a slope where they may leak into a RPA.

8.1 No fires to be lit within 20 metres of any tree stem and the fire size and wind direction should be taken into account so that, no flames come within 5.0m of any foliage.

8.2 No high-sided vehicles or cranes should access the site close to any trees to be retained and should not come into contact with any branches or travel within the RPA.

8.3 No notice boards, cables or other services to be attached to any tree.

8.4 Materials which may contaminate the soil should not be discharged within 10m of any tree stem. When undertaking the mixing of materials It Is essential that any slope of the ground does not allow contaminates to run towards a tree root area.

9.0 **Site Gradients**

No alterations of soil levels to take place within the RPA of the protected trees

10.0 **Demolition Works**

No demolition works to take place with the RPA of the protected trees

11.0 **Hard Surfaces**

Where new hard paved surfaces are required within the RPA, these should be done so with a 'no dig' specification and should utilise a cellular-confinement system such as Terram Geocell, supplied by Fiberweb Geosythetics Ltd, Blackwater Trading Estate, The Causeway, Maldon, Essex, CM9 4GG, telephone 01621 874200.

12.0 **Soft landscaping**

Any new planting scheduled to be carried out within any RPA needs to be done so with consideration of the existing trees roots. Planting pits need to be hand dug, and extreme caution exercised to ensure no roots are severed during digging.

12.1 The planting scheme should select suitable species to enhance the area and consider the available rooting space, soil type, hydrology and availability of sunlight.

13.0 **Use of Herbicides**

No herbicide use is predicted, however if used, it should be done so in strict accordance with the manufacturer's instructions and contact with any tree foliage should be avoided.

14.0 On Site Monitoring Regime

All operations to be monitored by the main contractor. The site manager shall contact the appointed specialist if there is a breach of the RPA and tree protection measures. The appointed specialist shall recommend an action plan to incorporate mitigation measures where necessary.

15.0 Use of Sub-Contractors

The main-contractor will be responsible for ensuring sub-contractors do not carry out any process or operation that is likely to adversely impact upon any tree on site.

16.0 Contingency Plan

Water should be readily available on site to be used to flush split materials through the soil and avoid contamination to tree roots. At the time of any spillage the main contractor needs to contact an appointed specialist for advice.

17.0 Tree Pruning Works

All recommended tree works should be undertaken prior to the commencement of construction activities. Trees on site which have been identified to have their crowns lifted and/or formative pruning, must be carried in accordance with BS 3998 British Standard Tree Work - Recommendations 2010 by a competent tree surgeon to the following specification:

Crown Lifting & Formative Pruning:

- Where practicable, pruning should be restricted to healthy, small diameter parts of the tree to minimise the size of resultant wounds and enable these to be occluded.
- Crownlift to achieve a clearance of 5m above ground level to include complete removal of the lowest primary branch only and thereafter secondary and tertiary branches, not exceeding 50mm diameter cuts. When pruning branches back to the main stem or fork, the branch will be removed in small sections using the step cut method leaving a small stub before carrying out the final cut.
- Formative pruning to epicormic growth less than 20mm in diameter to be pruned cleanly back to its point of origin, avoiding damaging the bark of the tree. Growth greater than 20mm is to be cut back to avoid damage to the branch bark ridge and

collar if applicable. All pruning carried out using a sharp handsaw or secateurs. On no account will a chainsaw be used in this operation. All shoots will be removed back to, but not into the branch collar leaving no projections or exaggerating the size of the wound.

18.0 **Installation of Acoustic Fencing within Root Protection Area**

The following Arboricultural Method Statement is to be followed when installing any fencing, including the proposed 5.0m high acoustic fencing, close to existing trees to prevent damage to roots, trunk and branches:

- Heras type protective fencing to be installed to fence off the trees from the construction activities. All fencing to be pegged and braced to resist impact and/or reinforced using horizontal rails – to resist accidental impact and make the whole fencing more inconvenient to be moved and therefore more likely to be respected by contractors during works.
- No excavations using machinery is to take place within the RPA exclusion zones. All works to be carried out in accordance with the NJUG Chapter 4 – Guidelines for the Planning, Installation and Maintenance of Utility Apparatus in Proximity to Trees.
- Holes for fence posts to be carefully dug by hand avoiding damage to roots, particularly those of 10mm diameter and above or significant clumps of smaller roots, which may be encountered. Post hole positions must be adjusted where significant roots are encountered.
- No storage of materials or mixing of cement to take place within the RPA or at a separation of less than 10m and/or locating downhill or use of bunding so that run off cannot encroach the RPA.
- No machinery or vehicles to travel within the RPA of any tree by ensuring the protective fencing remains in place at all times during the construction works.

- Holes dug for fence posts to be lined with polythene prior to pouring concrete to prevent cement coming into contact with tree roots.
- Extreme care to be taken when installing fencing posts and panels to prevent damage to trunk or branches of the trees. The works are to be appropriately supervised at all times. The work supervisor/contracts manager is to relay the information in this report in "tool box talks" including a pre start briefing.
- No fence posts to be located within 1m of the tree trunks.
- No fence panel should be closer than 1m from the trunk to allow for future expansion of the trunks girth.

19.0 **Responsibilities**

It will be the responsibility of the main contractor to ensure that the planning conditions are adhered to at all times and that a monitoring regime in regards to tree protection is adopted on site.

19.1 The main contractor will be responsible for contacting the Local Planning Authority at any time issues are raised related to the trees on site.

19.2 If at any time pruning works are required permission must be sought from the Local Planning Authority first and then carried out In accordance with BS 3998.

19.3 The main contractor will ensure the build sequence is appropriate to ensure that no damage occurs to the trees during the construction processes. Protective fences will remain in position until completion of ALL construction works on the site.

19.4 Protective fencing should be erected around all trees to be retained as per the following:

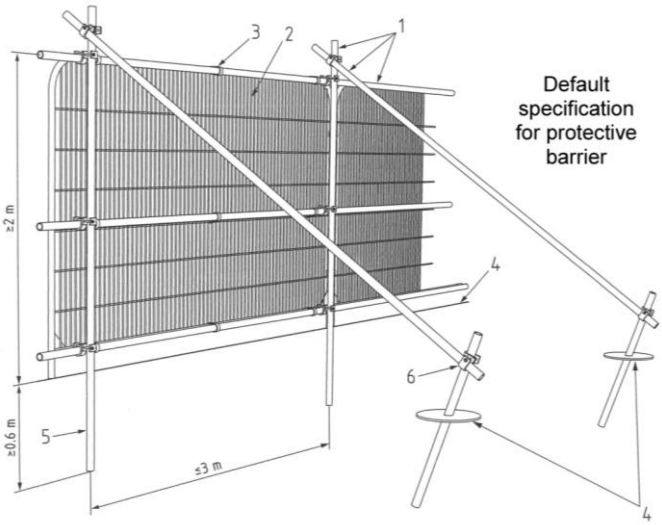

19.5 Signs, in accordance with the following example, should be displayed to inform all personnel where the tree protection zones are and to warn them not to enter.

Example of "Keep Out" Sign:

TREE PROTECTION ZONE

KEEP OUT!

No digging or trenching
No storage of plant or materials
No vehicular access
No fire lighting
No chemical handling
Avoid plant contact with tree canopy

Report any tree or fence damage to the Site Manager immediately

Appendix D - Photographic Record



Photo 1 - View of the 5 Birch trees close to the existing site entrance on the eastern boundary (T1-T5). These trees require removal



Photo 2 - View of two Alders (T6-T7) and Ash (T8) on the northern eastern boundary. The 2 no Alder to be removed, Ash maybe retained



Photo 3 – View of the belt of Alder's (G1) planted along the eastern boundary to be retained



Photo 4 - View of the Birch (T9) which is actually 2 trees growing very close together to form a single specimen. Possibly retained



Photo 5 - View of the group of Alder behind in the north eastern corner of the site (G2) beyond the site boundary. To be retained



Photo 6 - View of the group of Alder (G3) beyond the northern site boundary. To be retained



Photo 7 - View of the group of Alder (G4) and Oak (T15) beyond the site boundary. To be retained



Photo 8 - View of 2 Ash and 1 Alder (T12-T14) planted within a shrub bed in the car park area. To be removed



Photo 9 - View of the Maple (T16) in the grass verge adjacent to the north-western boundary. To be retained



Photo 10 - View of the group of Alder (G5) beyond the boundary and single Alder (T17) within the boundary to be retained (if possible)



Photo 11 – View of the Alder (T19) in the grass verge adjacent to the north-western boundary. To be retained



Photo 12 - View of the poor silver birch (T22). To be removed



Photo 13 - View of the multi stem Alder (T26) with 3 trunks. To be removed



Photo 14 - View of the large Oak (T27) beyond the boundary within group of Alder (G7) to be retained



Photo 15 - View of the young, recently planted tree with timber support within the car park to be removed. Woodland belt behind (G7)



Photo 16 - View of the woodland belt on the western boundary (G8) to be retained



Photo 17 - View of woodland belt on the western boundary (G9) to be retained



Photo 18 - View of woodland belt on the western boundary (G10) to be retained



Photo 19 – View of the Oak (T35) to be removed and group of Silver Birch (G11) on the south-western boundary (to be retained)



Photo 20 - View of the Ash (T36) within the shrub planting on the south-western corner of the site to be retained



Photo 21 - View of the group of Sycamore on the eastern boundary (G13). Two of them may be retained, 3 to be removed



Photo 22 - View of the trees on the eastern boundary (T38 & T39) to be retained



Photo 23 - View of trees on the eastern boundary (G14) to be retained



Photo 24 - View of False Acacia (T41) within the boundary close to the existing building to be removed



Photo 25 - View of the group of Maple (G15) close to the existing building. Two trees may be retained within the perimeter verge



Photo 26 - View of the group of False Acacia (G16) to be removed to make way for the new site entrance



Photo 27 – View of the group of False Acacia (G17) within grassed area adjacent to the eastern boundary. To be removed



Photo 28 - View of the group of young False Acacia (G18) within the grassed area adjacent to the existing building



Photo 29 - View of the Maple (T42) adjacent to School Lane beyond the southern site boundary. To be retained



Photo 30 - View of group of Cherry trees (G20) within the grass verge on the southern boundary. To be retained



Photo 31 - View of commemorative Plane tree (T43) on the southern boundary to be retained



Photo 32 - View of the commemorative plaque at the base of the Plane tree (T43) to be retained