MIKE SAVAGE
& ASSOCIATES
Tree Care & Land Management Consultancy



ARBORICULTURAL IMPACT ASSESSMENT & Method Statement

for

Phase 3 – Reserved Matters at Crowdhill Green, Hardings Lane, Fair Oak

-prepared on behalf of ***Bloor Homes Limited*** *–*

MIKE SAVAGE & ASSOCIATES
Tree Care & Land Management Consultancy

Section	Subject Heading
1	INTRODUCTION & CLIENTS BRIEF
2	DOCUMENT DISCLOSURE STATEMENT
3	TREE SURVEY & ROOT PROTECTION SCHEDULE
4	IMPACT ASSESSMENT & TREE PROTECTION MEASURES RECOMMENDED
5	PRE – DEVELOPMENT TREE WORK
6	METHOD STATEMENT - PHASING AND WORKS PROGRAM
7	MONITORING & SUPERVISION
8	CONCLUSIONS

Appendices	Subject
MS/BH1	Figure 1- Flow Diagram from BS5837 + Tree Survey Notes
MS/BH2	Combined Tree Survey & Root Constraints Plans (Extracts From Master Plan) – **MS/BJH.01/02**
MS/BH3	Combined Tree Retention & Removals Plans & Tree Protection Plans (Extracts From Master Plan) – **MS/BJH 03/04 +** BS5837 – Figure 2
MS/BH4	Qualifications & Experience

1.0 INTRODUCTION & CLIENTS BRIEF

1.1 Our clients – **Bloor Homes Limited -** have progressed with the Master Plan for this project and obtained Planning Approval for same and now seek to resolve Reserved Matters issues as required by that approval.

1.2 Our work is to be compiled in accordance with the recommendations contained within BS5837:2012.

2.0 DOCUMENT DISCLOSURE STATEMENT

2.1 A copy of the following Planning Layout drawings as prepared by our clients architects – **Tetlow King Architects -** have been provided to us for the purposes of our work and we rely totally on the accuracy of these drawings :-

- **BL00140507- SL.02.PH-3 Rev J – Crowdhill Green Phase 3 Reserved Matters - Site Layout Phase 3 - 1:500 @ A0**
- **WSP – 70004286 – 4286/D/151- Rev E – Aug 15 (3 sheets)**

3.0 TREE SURVEY & ROOT PROTECTION SCHEDULES

3.1 The site was inspected between **26th June & 11th July 2013** and a tree survey exercise undertaken in accordance with BS5837:2012 recommendations (see explanatory tree survey notes **at appendix MS/BH1**).

3.2 The following schedule lists those trees and groups which are potentially impacted by the proposals.

Tree No.	Species	Ht m	Diam mm	Brch Sprd m	GC m	LS	Condition Comments	Management Recommendations	Rem Con yrs	Cat
1 **TPO 117 G1**	Pedunculate Oak *Quercus robur*	17	740	N10 E10 S9 W5	3	M	Ivy smothering base, trunk and through crown-suppressed to the west-small diameter deadwood-large diameter deadwood and stubs-fair shape and form-lower branch damage probably caused by farm vehicles-low branch to west side has a weak point where the major part of the limb has been ripped out	Sever ivy-remove all major deadwood, broken branches and hangers-reduce and reshape lowest branches to west side by 4m for safety reasons in view of parked cars	>40	A1
2 **TPO 117 G1**	Pedunculate Oak *Quercus robur*	17	855	N10 E5 S11 W8	3	M	Suppressed east-small diameter deadwood-large diameter deadwood and stubs-fair shape and form	Remove all major deadwood	>40	A1

3 **TPO 117 G1**	Pedunculate Oak *Quercus robur*	20	870	N11 E10 S10 W5	3	M	Ivy smothering base , trunk and through crown-lowest dead branch on south side has been shortened back to accommodate the passage of farm vehicles-hazard beam split in major lateral at 12m from ground level on east side	Sever ivy-remove all major deadwood-reduce and reshape branch with hazard beam split to make safe	>40	A1
4 **TPO 117 G1**	Pedunculate Oak *Quercus robur*	17	730	N10 E2 S8 W8	4	M	Ivy smothering base, trunk and through crown-bifurcated at 4m above ground level-suppressed east-significant dieback in upper crown on west side-large diameter deadwood and stubs-some major dead limbs-poor shape and form	Sever ivy-remove all major deadwood	>40	B1
5 **TPO 117 G1**	Pedunculate Oak *Quercus robur*	18	1000	N10 E7 S10 W10	3	M	Ivy smothering base, trunk and through crown-suppressed to the east-small diameter deadwood-large diameter deadwood and stubs	Sever ivy-remove all major deadwood	>40	A1
Grp 4	Ash (*Fraxinus*) Hawthorn (*Crataegus*) Grey Willow (*Salix*)	8 to 10	400	N- E- S- W-	0	SM	Dieback noted-poor shape and form of many trees-deadwood throughout many trees-several trees in this group have either heaved or fallen-many trees are ivy clad	Advise fell and/or coppice 50% of trees as necessary to perpetuate this wooded spinney	20-30	C2
Grp 5	Oak (*Quercus)* Ash (*Fraxinus*) Blackthorn (*Prunus*) Hawthorn (*Crataegus*) Holly (*Ilex*) Cherry (*Prunus*)	15 to 24	500 to 800	N- E- S- W9	4	EM to M	Small diameter deadwood-large diameter deadwood and stubs-storm damage in some trees-good shape and form-some dead trees in this shelterbelt screen-strong under storey of native trees and shrubs including *Ruscus* and Elder-6-7m branch overhang of site	Advise clearing out major deadwood where necessary. Remove storm damaged branches where necessary. Lift lower branches to west side to accommodate proposed development	>40	A2
G5a	Pedunculate Oak *Quercus robur*	18	540	N7 E10 S5 W8	4	M	Small and large diameter deadwood	Remove all dead wood	>40	B1
G5b	Pedunculate Oak *Quercus robur*	18	510	N8 E10 S2 W7	4	EM	Ivy smothering basal area and trunk – crown weighted to the east and west sides – contorted trunk	Remove all dead wood	>40	B1 / C1
G5c	Ash *x 2 of Fraxinus excelsior*	18	430 430	N5 E10 S5 W7	2.5	M	Bifurcated at ground level – large diameter deadwood – hazard beam split in lowest branch to the southeast side	Remove all dead wood – remove the branch with the hazard beam split	>40	B1
G5d	Pedunculate Oak *Quercus robur*	20	540 430	N5 E12 S5 W7	4	M	Bifurcated at 1.5m above ground – epicormics throughout – large diameter deadwood and stubs – significant wound on east side of northern trunk – 240mm wide and 750mm tall with decay in basal portion of wound and woodworm throughout	Remove all dead wood - recommend further investigation with Decay Detection Equipment	>40	B1 / C1

G5e	Pedunculate Oak *Quercus robur*	22	600 520	N7 E9 S7 W9	4	M	Ivy smothering basal area - bifurcated at ground level – small and large diameter deadwood	Remove all dead wood	>40	B1
G5f	Pedunculate Oak *Quercus robur*	20	670	N5 E8 S9 W10	4	M	Small and large diameter deadwood	Remove all dead wood	>40	B1
G5g	Ash *Fraxinus excelsior*	24	150 400 380 360 220	N8 E8 S8 W10	3.5	M	Ivy smothering one trunk-multi-stemmed at ground level-crown shape dictated by group pressures-small and a large diameter deadwood-low branching habit to the west side	No work considered essential at time of survey	>40	B1
G5h	Pedunculate Oak *Quercus robur*	22	660	N8 E12 S6 W10	4	M	Crown shape dictated by group pressures-small and a large diameter deadwood-low branching habit to the west side	No work considered essential at time of survey	>40	A1
G5i	Pedunculate Oak *Quercus robur*	18	640	N4 E2 S2 W10	3.5	M	Epicormics smothering trunk-crown weighted to the west side-small diameter deadwood- crown shape dictated by group pressures	No work considered essential at time of survey	>40	B1
G5j	Sweet Chestnut *Castanea sativa*	24	450 450 350 370 480	N8 E5 S8 W12	3.5	M	Multi-stemmed at ground level-tight forks with included bark-small pockets of decay in basal wounds- crown shape dictated by group pressures-low branching habit to the west side-tree camp screwed to trunks at 2m agl	Remove tree camp	>40	A1
G5k	Pedunculate Oak *Quercus robur*	24	500 440 620 250	N10 E12 S8 W12	2.5	M	Multi-stemmed at ground level-tight forks with included bark-small and large diameter deadwood- crown shape dictated by group pressures-low branching habit to the west side-good overall shape and form	No work considered essential at time of survey	>40	A1
G5l	Pedunculate Oak *Quercus robur*	20	530	N4 E2 S2 W8	2.5	EM	Ivy smothering throughout-crown weighted to the west side-crown shape dictated by group pressures-	No work considered essential at time of survey	>40	B1
G5m	Sweet Chestnut *Castanea sativa*	20	630 630	N6 E12 S12 W8	6	M	Large diameter deadwood and stubs-large dead branch at 4m agl on south side	Remove all deadwood for safety reasons	>40	A1
11	Rowan *Sorbus aucuparia*	6	170 #	N3 E3 S3 W3	2	SM	Unable to access as tree is off site-good shape and form	No work considered essential at time of survey	30-40	A1

12	European Larch *Larix decidua*	10	370 #	N6 E5 S6 W2	3	EM	Unable to access as tree is off site-ivy smothering base, trunk and through crown-poor shape and form-crown weighted to the north-die back in upper crown-large and small diameter deadwood throughout crown-flat topped crown possibly due to constant bird roosting	Remove deadwood throughout tree-limited useful life expectancy	10-20	C1
13	Sycamore *Acer pseudoplatanus*	10	250 # 200 #	N4 E4 S2 W4	2	SM	Unable to access as tree is off site-ivy smothering base and trunk-poor shape and form-bifurcated at 1.5m-suppressed south by adjacent trees	No work considered essential at time of survey	30-40	C1
Grp 6	Monterey Cypress (Cupressus) *x 3 of*	20	600 700 500	N2 E5 S2 W5	2	M	Unable to access as tree is off site-ivy smothering base and trunk-root plate lifted on northernmost tree-crown shape dictated by group pressure-once part of a shelterbelt and companion trees to north and south have been removed-poor shape and form-bifurcated at 2m-tight forks with included bark at 1m-deadwood throughout tree-minor die back	Advise owner to have them safety checked	10-20	C2
14	Birch (*Betula*) *x 1 of* Alder (*Alnus*) *x 2 of*	15	570 470 470	N7 E5 S5 W5	1	EM	Ivy smothering trunk and through crown-crown shape dictated by group pressure-merged crowns	No work considered essential at time of survey	>40	B2
15	Pedunculate Oak *Quercus robur*	20	750	N6 E12 S10 W10	3	M	Crown shape dictated by group pressure-merged crowns-good shape and form	No work considered essential at time of survey	>40	A1
16	Pedunculate Oak *Quercus robur*	20	480 360 230	N6 E11 S11 W8	4	M	Multi stemmed 1m above ground level-crossing and rubbing trunks-broken trunk at 3m on west side	Remove broken trunk and tidy	>40	A1
Grp 7	Hazel (*Corylus*) Holly (*Ilex*) Hawthorn (*Crataegus*)	5	150 *x 5 of*	N- E5 S- W-	0	SM	Understorey plants at edge of woodland-old Sweet Chestnut coppice behind	No work considered essential at time of survey	>40	B2
17	Ash *Fraxinus excelsior*	19	450	N4 E12 S6 W6	4	EM	Ivy smothering base, trunk and through crown-small and large diameter deadwood	No work considered essential at time of survey	>40	B1
18	Pedunculate Oak *Quercus robur*	18	680	N10 E5 S5 W5	4	M	Ivy smothering base, trunk and through crown-suppressed to west-crown weighted north-small and large diameter deadwood	Remove major deadwood	>40	B1
Grp 8	Sweet Chestnuts *Castanea sativa*	18 to 20	Largest 560	N10 E4 S4 W4	3	EM	Suppressed-significant amount of small and large diameter deadwood-some trees have woodpecker holes	No work considered essential at time of survey	>40	C2

19	Silver Birch *Betula pendula*	20	450	N7 E3 S4 W4	4	EM	Significant basal decay and slime flux ooze on trunk	Fell for safety reasons	0-5	**U**
20	Ash *Fraxinus excelsior*	20	370	N8 E9 S8 W5	9	EM	Bifurcated at ground level	No work considered essential at time of survey	>40	B1
21	Ash *Fraxinus excelsior* *x 6 of*	20	Lrgest 300 350	N8 E5 S5 W5	7	EM	Largest tree is bifurcated 1.5m above ground level	No work considered essential at time of survey	>40	B2
22	Pedunculate Oak *Quercus robur* *x 2 of*	20	880	N6 E9 S6 W4	3	EM	Ivy smothering base, trunk and through crown-bifurcated at 2m above ground level-suppressed-crown weighted east-small and large diameter deadwood-significant lean on southern tree	No work considered essential at time of survey	>40	B2
23	Pedunculate Oak *Quercus robur*	22	650	N8 E12 S6 W8	5	M	Ivy smothering base and through crown	No work considered essential at time of survey	>40	A1
Grp 9	Sweet Chestnut (*Castanea*) Wild Apple (*Malus*)	20	Lrgest 380 250 360 340	N5 E5 S5 W5	4	SM	Largest tree is multi stemmed-crown shape dictated by group pressure-merged crowns	No work considered essential at time of survey	>40	B2
24	Pedunculate Oak *Quercus robur*	22	460 330	N3 E9 S8 W4	6	M	Ivy smothering base, trunk ad through crown-multi stemmed-crown weighted to the south-crown shape dictated by group pressure-merged crowns	No work considered essential at time of survey	>40	B1
25	Pedunculate Oak *Quercus robur*	24	550 330 300	N3 E11 S3 W0	6	EM	Multi stemmed-leans east plus defects noted-crown weighted east-two of the three trunks have failed at 3m above ground level	No work considered essential at time of survey	>40	C1
26	Pedunculate Oak *Quercus robur*	20	460 290	N5 E5 S7 W7	4	EM	Ivy smothering base, trunk and through crown-bifurcated-small diameter deadwood	No work considered essential at time of survey	>40	B1
27	Pedunculate Oak *Quercus robur*	18	440	N3 E7 S2 W1	6	EM	Ivy smothering base, trunk and through crown-low crown density-small diameter deadwood and stubs	No work considered essential at time of survey	>40	C1

28	Pedunculate Oak *Quercus robur*	18	600 440	N11 E6 S8 W11	3	M	Ivy smothering base, trunk and through crown-small and large diameter deadwood and stubs	No work considered essential at time of survey	>40	A1
29	Pedunculate Oak *Quercus robur*	12	430	N1 E8 S1 W1	3	SM	Ivy smothering base, trunk and through crown-crown weighted east-low crown density	No work considered essential at time of survey	20-30	C1
30	Ash *Fraxinus excelsior*	20	360 310 300 230	N6 E2 S12 W10	4	EM	Ivy smothering base and trunk –multi stemmed-suppressed east-crown shape dictated by group pressure-crown merged with Oak	No work considered essential at time of survey	>40	C1
31	Pedunculate Oak *Quercus robur*	22	480	N4 E4 S8 W6	4	M	Small leaf size-possibly hybridised	No work considered essential at time of survey	>40	B1
32	Pedunculate Oak *Quercus robur*	18	340 370 340	N1 E1 S9 W2	4	EM	Ivy smothering base and trunk-multi stemmed-significant arching lean to south-small leaf size-possibly hybridised	No work considered essential at time of survey	30-40	C1
33	Pedunculate Oak *Quercus robur*	24	800	N7 E10 S12 W7	4	M	Ivy smothering base, trunk and through crown-small and large diameter deadwood and stubs-small leaf size-open habit-possibly hybridised	No work considered essential at time of survey	>40	A1
Grp 10	Oak (*Quercus*) Ash (*Fraxinus*) Birch *(Betula*) Spruce (*Picea*)	av 18	av 300	N5 E5 S5 W5	3	SM	Woodland edge saplings	No work considered essential at time of survey	>40	B2
34	Pedunculate Oak *Quercus robur*	25	530 380 520	N10 E10 S12 W10	4	M	Smothered in ivy-small and large diameter deadwood and stubs-good shape and form	No work considered essential at time of survey	>40	A1
35	Pedunculate Oak *Quercus robur* *x 2 of*	18	Lrgest 540	N6 E3 S10 W6	5	EM	Ivy smothering base and trunk-crown shape dictated by group pressure-merged crowns	No work considered essential at time of survey	>40	B2
36	Turkey Oak *Quercus cerris*	25	550 650	N10 E6 S11 W8	5	M	Ivy smothering base and trunk-bifurcated 1m above ground level-small and large diameter deadwood and stubs-good shape and form	No work considered essential at time of survey	>40	A1

37	Pedunculate Oak *Quercus robur*	18	470	N6 E4 S6 W2	10	EM	Ivy smothering base and trunk-suppressed-crown shape dictated by group pressure-merged crowns-small leaf size-possibly hybridised	No work considered essential at time of survey	>40	C1
38	Pedunculate Oak *Quercus robur*	18	450	N2 E2 S9 W2	4	EM	Ivy smothering base and trunk-suppressed-crown shape dictated by group pressure-merged crowns-low crown density-small leaf size-possibly hybridised	No work considered essential at time of survey	>40	C1
39	Turkey Oak *Quercus cerris*	25	970	N6 E6 S12 W6	4	M	Ivy smothering base and trunk-bifurcated 3m above ground level-good shape and form	No work considered essential at time of survey	>40	A1
40	Pedunculate Oak *Quercus robur*	24	470	N4 E2 S8 W3	7	EM	Ivy smothering base and trunk-suppressed-crown shape dictated by group pressure-merged crowns-small leaf size-possibly hybridised	No work considered essential at time of survey	>40	B1 / C1
41	Pedunculate Oak *Quercus robur*	22	490	N3 E2 S9 W4	6	EM	Ivy smothering base and trunk-suppressed-crown shape dictated by group pressure-merged crowns-large diameter deadwood and stubs-small leaf size-possibly hybridised	No work considered essential at time of survey	>40	B1 / C1
42	Turkey Oak *Quercus cerris*	22	500	N6 E3 S8 W6	6	EM	Ivy smothering base and trunk-small diameter deadwood	No work considered essential at time of survey	>40	B1
43	Turkey Oak *Quercus cerris*	24	700	N6 E6 S12 W6	6	M	Ivy smothering base and trunk	No work considered essential at time of survey	>40	B1
44	Ash *Fraxinus excelsior*	24	430 250 280 250 230	N8 E10 S10 W2	6	EM	Ivy smothering base and trunk and through crown-multi stemmed-suppressed-crown weighted east-large diameter deadwood and stubs	No work considered essential at time of survey	>40	B1
45	Pedunculate Oak *Quercus robur*	16	450	N3 E5 S7 W3	4	EM	Ivy smothering base and trunk-suppressed-low crown density-small and large diameter deadwood and stubs	No work considered essential at time of survey	>40	C1
Grp 11	Ash (*Fraxinus*) *x 6 of* Oak (*Quercus*) *x 1of*	18	av 400	N5 E5 S5 W5	6	EM	Significant dieback-small and large diameter deadwood-poor quality tree	Fell for safety reasons	0-5	**U**

46	Pedunculate Oak *Quercus robur*	16	550	N2 E2 S12 W2	3	EM	Smothered in ivy-small leaf size-significant arching lean to south-possibly hybridised-would be left exposed	Fell for safety reasons	0-5	**U**
47	Pedunculate Oak *Quercus robur*	18	590	N4 E4 S10 W4	5	EM	Ivy smothering base and trunk-crown shape dictated by group pressure-merged crowns	No work considered essential at time of survey	>40	B1 / C1
48	Pedunculate Oak *Quercus robur*	20	650	N7 E7 S10 W7	2	EM	Ivy smothering base and trunk-suppressed-crown shape dictated by group pressure-merged crowns-small leaf size-possibly hybridised-fair shape and form	No work considered essential at time of survey	>40	B1
49	Turkey Oak *Quercus cerris*	26	850	N12 E12 S12 W12	3	M	Base smothered in ivy-small and large diameter deadwood-good shape and form	No work considered essential at time of survey	>40	A1
Grp 12	Ash *Fraxinus excelsior*	12 to 16	av 200 to 600	N8 E8 S8 W8	0	SM to EM	Ivy smothering base and trunks-some multi stemmed-significant dieback in some trees and canker throughout with risk of crown collapse-small diameter deadwood-some dead trees-occasional understorey Cherry/Dog Rose/Willow/Hazel/Blackthorn/Butchers Broom at shelterbelt edges to east and west sides	Dead/dying trees -fell	>40	C2
50	Pedunculate Oak *Quercus robur*	18	550	N8 E12 S9 W4	2	EM	Ivy smothering base and trunk-small and large diameter deadwood-apart from being suppressed on west side this is a good tree for the future-would benefit from removal of Ash tree from west side	Remove all deadwood	>40	A1 / B1
Shelt 1	Hazel (*Corylus*) Birch (*Betula*) Aspen (*Populus*) Cherry (*Prunus*) Whitebeam (*Sorbus*) Field Maple (*Acer*) Ped Oak (Quercus)	5 to 14	150 to 220	N3 E3 S3 W3	0	Y to SM	Amenity screen planting-Aspens at western end are suckering within the site and have been horse browsed-2m-3m branch overhang of boundary line in places- understorey planting of Dogwood/Blackthorn/Hazel/Grey Willow/Viburnum	No work considered essential at time of survey	>40	A2

3.3 A Tree Root Protection Schedule has been prepared in accordance with BS5837:2012 recommendations

(see plan extracts BJH 01/02 at **appendix MS/BH2**)

Tree No.	Tree Species	Cat	Diam mm	BS5837:2012 Table D1 Radial Protect. Zone m	BS5837:2012 Table D1 Root Protect. Area m^2	Is An Offset Required To Cater For Existing Rooting Pattern Restrictions
1 **TPO 117 G1**	Pedunculate Oak *Quercus robur*	A1	740	8.9	248	**YES** – compacted track to south side will focus rooting growth more into open field to north side – although this will be at depth because each year the fibrous roots in the upper layers are ploughed off as the field is prepared to receive a crop
2 **TPO 117 G1**	Pedunculate Oak *Quercus robur*	A1	855	10.3	331	**YES** – compacted track to south side will focus rooting growth more into open field to north side – although this will be at depth because each year the fibrous roots in the upper layers are ploughed off as the field is prepared to receive a crop
3 **TPO 117 G1**	Pedunculate Oak *Quercus robur*	A1	870	10.4	342	**YES** – compacted track to south side will focus rooting growth more into open field to north side – although this will be at depth because each year the fibrous roots in the upper layers are ploughed off as the field is prepared to receive a crop
4 **TPO 117 G1**	Pedunculate Oak *Quercus robur*	B1	730	8.8	241	**YES** – compacted track to south side will focus rooting growth more into open field to north side – although this will be at depth because each year the fibrous roots in the upper layers are ploughed off as the field is prepared to receive a crop
5 **TPO 117 G1**	Pedunculate Oak *Quercus robur*	A1	1000	12.0	452	**YES** – compacted track to south side will focus rooting growth more into open field to north side – although this will be at depth because each year the fibrous roots in the upper layers are ploughed off as the field is prepared to receive a crop
Grp 4	Ash (*Fraxinus*) Hawthorn (*Crataegus*) Grey Willow (*Salix*)	C2	400	4.8	72	NO – fairly free rooting to all directions
Grp 5	Oak (*Quercus*) Ash (*Fraxinus*) Blackthorn (*Prunus*) Hawthorn (*Crataegus*)	A2	500 to 800	6.0 to 9.6	113 to 290	See below for individual details
G5a	Pedunculate Oak *Quercus robur*	B1	540	6.5	132	**YES** – there is competition for space within the shelterbelt which will focus rooting more to the west side out into the open field - although this will be at depth because each year the fibrous roots in the upper layers are ploughed off as the field is prepared to receive a crop
G5b	Pedunculate Oak *Quercus robur*	B1 / C1	510	6.1	118	**YES** – there is competition for space within the shelterbelt which will focus rooting more to the west side out into the open field - although this will be at depth because each year the fibrous roots in the upper layers are ploughed off as the field is prepared to receive a crop
G5c	Ash *x 2 of Fraxinus excelsior*	B1	430 430	7.3	167	**YES** – there is competition for space within the shelterbelt which will focus rooting more to the west side out into the open field - although this will be at depth because each year the fibrous roots in the upper layers are ploughed off as the field is prepared to receive a crop
G5d	Pedunculate Oak *Quercus robur*	B1 / C1	540 430	8.3	216	**YES** – there is competition for space within the shelterbelt which will focus rooting more to the west side out into the open field - although this will be at depth because each year the fibrous roots in the upper layers are ploughed off as the field is prepared to receive a crop

G5e	Pedunculate Oak *Quercus robur*	B1	600 520	9.5	285	**YES** – there is competition for space within the shelterbelt which will focus rooting more to the west side out into the open field - although this will be at depth because each year the fibrous roots in the upper layers are ploughed off as the field is prepared to receive a crop
G5f	Pedunculate Oak *Quercus robur*	B1	670	8.0	203	**YES** – there is competition for space within the shelterbelt which will focus rooting more to the west side out into the open field - although this will be at depth because each year the fibrous roots in the upper layers are ploughed off as the field is prepared to receive a crop
G5g	Ash *Fraxinus excelsior*	B1	150 400 380 360 220	8.6	233	**YES** – there is competition for space within the shelterbelt which will focus rooting more to the west side out into the open field - although this will be at depth because each year the fibrous roots in the upper layers are ploughed off as the field is prepared to receive a crop
G5h	Pedunculate Oak *Quercus robur*	A1	660	7.9	197	**YES** – there is competition for space within the shelterbelt which will focus rooting more to the west side out into the open field - although this will be at depth because each year the fibrous roots in the upper layers are ploughed off as the field is prepared to receive a crop
G5i	Pedunculate Oak *Quercus robur*	B1	640	7.7	185	**YES** – there is competition for space within the shelterbelt which will focus rooting more to the west side out into the open field - although this will be at depth because each year the fibrous roots in the upper layers are ploughed off as the field is prepared to receive a crop
G5j	Sweet Chestnut *Castanea sativa*	A1	450 450 350 370 480	11.4	405	**YES** – there is competition for space within the shelterbelt which will focus rooting more to the west side out into the open field - although this will be at depth because each year the fibrous roots in the upper layers are ploughed off as the field is prepared to receive a crop
G5k	Pedunculate Oak *Quercus robur*	A1	500 440 620 250	11.3	403	**YES** – there is competition for space within the shelterbelt which will focus rooting more to the west side out into the open field - although this will be at depth because each year the fibrous roots in the upper layers are ploughed off as the field is prepared to receive a crop
G5l	Pedunculate Oak *Quercus robur*	B1	530	6.4	127	**YES** – there is competition for space within the shelterbelt which will focus rooting more to the west side out into the open field - although this will be at depth because each year the fibrous roots in the upper layers are ploughed off as the field is prepared to receive a crop
G5m	Sweet Chestnut *Castanea sativa*	A1	630 630	10.7	359	**YES** – there is competition for space within the shelterbelt which will focus rooting more to the west side out into the open field - although this will be at depth because each year the fibrous roots in the upper layers are ploughed off as the field is prepared to receive a crop
11	Rowan *Sorbus aucuparia*	A1	170 #	2.0	13	NO – fairly free rooting to all directions
12	European Larch *Larix decidua*	C1	370 #	4.4	62	NO – fairly free rooting to all directions
13	Sycamore *Acer pseudoplatanus*	C1	250 # 200 #	3.8	46	NO – fairly free rooting to all directions

Grp 6	Monterey Cypress (Cupressus) *x 3 of*	C2	600 700 500	7.2 8.4 6.0	163 222 113	NO – fairly free rooting to all directions
14	Birch (*Betula*) *x 1 of* Alder (*Alnus*) *x 2 of*	B2	570 470 470	6.8 5.6 5.6	147 100 100	NO – there is competition for rooting space but these trees are small and interdependent with their roots relying on the collective for stability and will not need an offset
15	Pedunculate Oak *Quercus robur*	A1	750	9.0	255	NO – there is competition for rooting space but these trees are small and interdependent with their roots relying on the collective for stability and will not need an offset
16	Pedunculate Oak *Quercus robur*	A1	480 360 230	7.7	187	**YES** – there is competition for space within the woodland which will focus rooting more to the east side out into the open field - although this will be at depth because each year the fibrous roots in the upper layers are ploughed off as the field is prepared to receive a crop
Grp 7	Hazel (*Corylus*) Holly (*Ilex*) Hawthorn (*Crataegus*)	B2	150 *x 5 of*	4.0	51	NO – there is competition for rooting space but these trees are small and interdependent with their roots relying on the collective for stability and will not need an offset
17	Ash *Fraxinus excelsior*	B1	450	5.4	92	**YES** – there is competition for space within the woodland which will focus rooting more to the east side out into the open field - although this will be at depth because each year the fibrous roots in the upper layers are ploughed off as the field is prepared to receive a crop
18	Pedunculate Oak *Quercus robur*	B1	680	8.2	209	**YES** – there is competition for space within the woodland which will focus rooting more to the east side out into the open field - although this will be at depth because each year the fibrous roots in the upper layers are ploughed off as the field is prepared to receive a crop
Grp 8	Sweet Chestnuts *Castanea sativa*	C2	Largest 560	6.7	142	NO – there is competition for rooting space but these trees are small and interdependent with their roots relying on the collective for stability and will not need an offset
19	Silver Birch *Betula pendula*	**U**	450	n/a	n/a	NO – this tree would be removed for sound arboricultural management reasons regardless of any redevelopment proposals
20	Ash *Fraxinus excelsior*	B1	370	4.4	62	NO – fairly free rooting to all directions
21	Ash *Fraxinus excelsior* *x 6 of*	B2	Largest 300 350	5.5	96	NO – fairly free rooting to all directions
22	Pedunculate Oak *Quercus robur* *x 2 of*	B2	880	10.6	350	**YES** – there is competition for space within the woodland which will focus rooting more to the east side out into the open field - although this will be at depth because each year the fibrous roots in the upper layers are ploughed off as the field is prepared to receive a crop
23	Pedunculate Oak *Quercus robur*	A1	650	7.8	191	**YES** – there is competition for space within the woodland which will focus rooting more to the east side out into the open field - although this will be at depth because each year the fibrous roots in the upper layers are ploughed off as the field is prepared to receive a crop

Grp 9	Sweet Chestnut (*Castanea*) Wild Apple (*Malus*)	B2	Largest 380 250 360 340	8.1	205	NO – there is competition for rooting space but these trees are small and interdependent with their roots relying on the collective for stability and will not need an offset
24	Pedunculate Oak *Quercus robur*	B1	460 330	6.8	145	**YES** – there is competition for space within the woodland which will focus rooting more to the east side out into the open field - although this will be at depth because each year the fibrous roots in the upper layers are ploughed off as the field is prepared to receive a crop
25	Pedunculate Oak *Quercus robur*	C1	550 330 300	8.5	227	**YES** – there is competition for space within the woodland which will focus rooting more to the east side out into the open field - although this will be at depth because each year the fibrous roots in the upper layers are ploughed off as the field is prepared to receive a crop
26	Pedunculate Oak *Quercus robur*	B1	460 290	6.5	134	**YES** – there is competition for space within the woodland which will focus rooting more to the east side out into the open field - although this will be at depth because each year the fibrous roots in the upper layers are ploughed off as the field is prepared to receive a crop
27	Pedunculate Oak *Quercus robur*	C1	440	5.3	88	**YES** – there is competition for space within the woodland which will focus rooting more to the east side out into the open field - although this will be at depth because each year the fibrous roots in the upper layers are ploughed off as the field is prepared to receive a crop
28	Pedunculate Oak *Quercus robur*	A1	600 440	8.9	250	**YES** – there is competition for space within the woodland which will focus rooting more to the east side out into the open field - although this will be at depth because each year the fibrous roots in the upper layers are ploughed off as the field is prepared to receive a crop
29	Pedunculate Oak *Quercus robur*	C1	430	5.2	84	**YES** – there is competition for space within the woodland which will focus rooting more to the east side out into the open field - although this will be at depth because each year the fibrous roots in the upper layers are ploughed off as the field is prepared to receive a crop
30	Ash *Fraxinus excelsior*	C1	360 310 300 230	7.3	167	**YES** – there is competition for space within the woodland which will focus rooting more to the south side out into the open field - although this will be at depth because each year the fibrous roots in the upper layers are ploughed off as the field is prepared to receive a crop
31	Pedunculate Oak *Quercus robur*	B1	480	5.8	104	**YES** – there is competition for space within the woodland which will focus rooting more to the south side out into the open field - although this will be at depth because each year the fibrous roots in the upper layers are ploughed off as the field is prepared to receive a crop
32	Pedunculate Oak *Quercus robur*	C1	340 370 340	7.3	167	**YES** – there is competition for space within the woodland which will focus rooting more to the south side out into the open field - although this will be at depth because each year the fibrous roots in the upper layers are ploughed off as the field is prepared to receive a crop
33	Pedunculate Oak *Quercus robur*	A1	800	9.6	290	**YES** – there is competition for space within the woodland which will focus rooting more to the south side out into the open field - although this will be at depth because each year the fibrous roots in the upper layers are ploughed off as the field is prepared to receive a crop
Grp 10	Oak (*Quercus*) Ash (*Fraxinus*) Birch *(Betula*) Spruce (*Picea*)	B2	av 300	3.6	41	NO – there is competition for rooting space but these trees are small and interdependent with their roots relying on the collective for stability and will not need an offset
34	Pedunculate Oak *Quercus robur*	A1	530 380 520	10.0	315	NO – fairly free rooting to all directions

35	Pedunculate Oak *Quercus robur* *x 2 of*	B2	Largest 540	6.5	132	**YES** – there is competition for space within the woodland which will focus rooting more to the south side out into the open field - although this will be at depth because each year the fibrous roots in the upper layers are ploughed off as the field is prepared to receive a crop
36	Turkey Oak *Quercus cerris*	A1	550 650	10.2	328	**YES** – there is competition for space within the woodland which will focus rooting more to the south side out into the open field - although this will be at depth because each year the fibrous roots in the upper layers are ploughed off as the field is prepared to receive a crop
37	Pedunculate Oak *Quercus robur*	C1	470	5.6	100	**YES** – there is competition for space within the woodland which will focus rooting more to the south side out into the open field - although this will be at depth because each year the fibrous roots in the upper layers are ploughed off as the field is prepared to receive a crop
38	Pedunculate Oak *Quercus robur*	C1	450	5.4	92	**YES** – there is competition for space within the woodland which will focus rooting more to the south side out into the open field - although this will be at depth because each year the fibrous roots in the upper layers are ploughed off as the field is prepared to receive a crop
39	Turkey Oak *Quercus cerris*	A1	970	11.6	426	**YES** – there is competition for space within the woodland which will focus rooting more to the south side out into the open field - although this will be at depth because each year the fibrous roots in the upper layers are ploughed off as the field is prepared to receive a crop
40	Pedunculate Oak *Quercus robur*	B1 / C1	470	5.6	100	**YES** – there is competition for space within the woodland which will focus rooting more to the south side out into the open field - although this will be at depth because each year the fibrous roots in the upper layers are ploughed off as the field is prepared to receive a crop
41	Pedunculate Oak *Quercus robur*	B1 / C1	490	5.9	109	**YES** – there is competition for space within the woodland which will focus rooting more to the south side out into the open field - although this will be at depth because each year the fibrous roots in the upper layers are ploughed off as the field is prepared to receive a crop
42	Turkey Oak *Quercus cerris*	B1	500	6.0	113	**YES** – there is competition for space within the woodland which will focus rooting more to the south side out into the open field - although this will be at depth because each year the fibrous roots in the upper layers are ploughed off as the field is prepared to receive a crop
43	Turkey Oak *Quercus cerris*	B1	700	8.4	222	**YES** – there is competition for space within the woodland which will focus rooting more to the south side out into the open field - although this will be at depth because each year the fibrous roots in the upper layers are ploughed off as the field is prepared to receive a crop
44	Ash *Fraxinus excelsior*	B1	430 250 280 250 230	8.0	200	**YES** – there is competition for space within the woodland which will focus rooting more to the south side out into the open field - although this will be at depth because each year the fibrous roots in the upper layers are ploughed off as the field is prepared to receive a crop
45	Pedunculate Oak *Quercus robur*	C1	450	5.4	92	NO – fairly free rooting to all directions
Grp 11	Ash (*Fraxinus*) *x 6 of* Oak (*Quercus*) *x 1of*	**U**	av 400	n/a	n/a	NO – this tree would be removed for sound arboricultural management reasons regardless of any redevelopment proposals
46	Pedunculate Oak *Quercus robur*	**U**	550	n/a	n/a	NO – this tree would be removed for sound arboricultural management reasons regardless of any redevelopment proposals

47	Pedunculate Oak *Quercus robur*	B1 / C1	590	7.1	157	**YES** – there is competition for space within the woodland which will focus rooting more to the south side out into the open field - although this will be at depth because each year the fibrous roots in the upper layers are ploughed off as the field is prepared to receive a crop
48	Pedunculate Oak *Quercus robur*	B1	650	7.8	191	**YES** – there is competition for space within the woodland which will focus rooting more to the south side out into the open field - although this will be at depth because each year the fibrous roots in the upper layers are ploughed off as the field is prepared to receive a crop
49	Turkey Oak *Quercus cerris*	A1	850	10.2	327	NO – fairly free rooting to all directions
Grp 12	Ash *Fraxinus excelsior*	C2	200 to 600	2.4 7.2	18 163	NO – there is competition for rooting space but these trees are small and interdependent with their roots relying on the collective for stability and will not need an offset
50	Pedunculate Oak *Quercus robur*	A1 / B1	550	6.6	137	NO – fairly free rooting to all directions
Shelt 1	Hazel (*Corylus*) Birch (*Betula*) Aspen (*Populus*) Cherry (*Prunus*) Whitebeam (*Sorbus*) Field Maple (*Acer*) Pedunc. Oak (Quercus)	A2	150 to 220	1.8 2.6	10 22	NO – these are young plants

4.0 IMPACT ASSESSMENT & TREE PROTECTION MEASURES RECOMMENDED

4.1 The finalised planning layout drawing has been provided to us and an assessment made as to the viability of retaining trees as part of this layout in order that they meet the RPA requirements of BS5837 - the data is presented here in tabular format:-

Key: **RSAM** = Remove for sound arboricultural management reasons **RTFD** = Remove to facilitate development **UF** = under footprint of proposed development

YES = Yes can be retained and fully protected **YES (1) =** Yes can be retained subject to mitigation measures being applied

Tree No	Species	Cat	Stem Diam mm	BS5837:2012 Radial Protection Area m	BS5837:2012 Polygon Area m^2	Distance from Site Features (see key above)	Can Tree Be Retained
1 TPO 117 G1	Pedunculate Oak *Quercus robur*	A1	740	8.9	248	10m to footpath 21m to Plot 173 1m to close boarded boundary fence	YES (1)
2 TPO 117 G1	Pedunculate Oak *Quercus robur*	A1	855	10.3	331	11.5m to garage 18.5m to Plot 174 3.5m to close boarded boundary fence	YES (1)
3 TPO 117 G1	Pedunculate Oak *Quercus robur*	A1	870	10.4	342	12m to garage 19m to Plot 175 5m to close boarded boundary fence	YES (1)
4 TPO 117 G1	Pedunculate Oak *Quercus robur*	B1	730	8.8	241	12m to garage 19.5m to Plot 176 3m to close boarded boundary fence	YES (1)
5 TPO 117 G1	Pedunculate Oak *Quercus robur*	A1	1000	12.0	452	13.5m to garage 22m to Plot 176 3m to close boarded boundary fence 9m to new sewer pipe	YES (1)
Grp 4	Ash (*Fraxinus*) Hawthorn (*Crataegus*) Grey Willow (*Salix*)	C2	400	4.8	72	Average 5m to footpath Average 10m to attenuation pond	YES
Grp 5	Oak (*Quercus)* Ash (*Fraxinus*) Blackthorn (*Prunus*) Hawthorn (*Crataegus*)	A2	500 to 800	6.0 9.6	113 290	Average of 8m to built environment	YES (1)
G5a	Pedunculate Oak *Quercus robur*	B1	540	6.5	132	8m to footpath 10m to Plot 136	YES (1)

Tree No	Species	Cat	Stem Diam mm	BS5837:2012 Radial Protection Area m	BS5837:2012 Polygon Area m^2	Distance from Site Features (see key above)	Can Tree Be Retained
G5b	Pedunculate Oak *Quercus robur*	B1 / C1	510	6.1	118	9m to footpath 13.5m to Plot 138 10.5m to turning head	**YES**
G5c	Ash *x 2 of* *Fraxinus excelsior*	B1	430 430	7.3	167	9m to footpath 12.5m to Plot 138 10.5m to turning head	**YES**
G5d	Pedunculate Oak *Quercus robur*	B1 / C1	540 430	8.3	216	9.5m to footpath 12.5m to Plot 138	**YES (1)**
G5e	Pedunculate Oak *Quercus robur*	B1	600 520	9.5	285	13m to close boarded boundary fence 14m to Plot 138	**YES**
G5f	Pedunculate Oak *Quercus robur*	B1	670	8.0	203	15m to close boarded boundary fence 16.5 to Plot 147	**YES**
G5g	Ash *Fraxinus excelsior*	B1	150 400 380 360 220	8.6	233	8.5m to footpath 15.5m to Plot 148	**YES (1)**
G5h	Pedunculate Oak *Quercus robur*	A1	660	7.9	197	11.5m to garage 15m to Plot 148	**YES**
G5i	Pedunculate Oak *Quercus robur*	B1	640	7.7	185	9m to Visitors Parking Bay 10m to access road	**YES (1)**
G5j	Sweet Chestnut *Castanea sativa*	A1	450 450 350 370 480	11.4	405	10.5m to Visitors Parking Bays	**YES (1)**
G5k	Pedunculate Oak *Quercus robur*	A1	500 440 620 250	11.3	403	9m to footpath 15m to Plot 164	**YES (1)**
G5l	Pedunculate Oak *Quercus robur*	B1	530	6.4	127	11.5m to footpath 14m to Plot 163	**YES**

Tree No	Species	Cat	Stem Diam mm	BS5837:2012 Radial Protection Area m	BS5837:2012 Polygon Area m^2	Distance from Site Features (see key above)	Can Tree Be Retained
G5m	Sweet Chestnut *Castanea sativa*	A1	630 630	10.7	359	15m to footpath 17.5 m to Plot 163	**YES**
11	Rowan *Sorbus aucuparia*	A1	170 #	2.0	13	23m to Plot 163	**YES**
12	European Larch *Larix decidua*	C1	370 #	4.4	62	6.5m to Plot 163	**YES**
13	Sycamore *Acer pseudoplatanus*	C1	250 # 200 #	3.8	46	0m to close boarded boundary fences 4m & 6m to garages	**YES (1)**
Grp 6	Monterey Cypress (Cupressus) *x 3 of*	C2	600 700 500	7.2 8.4 6.0	163 222 113	7.5m to Plot 172 6m to Parking Bays	**YES (1)**
14	Birch (*Betula*) *x 1 of* Alder (*Alnus*) *x 2 of*	B2	570 470 470	6.8 5.6 5.6	147 100 100	7.5m to footpath 10.5m to Attenuation Pond	**YES**
15	Pedunculate Oak *Quercus robur*	A1	750	9.0	255	10m to footpath	**YES**
16	Pedunculate Oak *Quercus robur*	A1	480 360 230	7.7	187	6.5m to footpath 9.5m to Attenuation Pond	**YES (1)**
Grp 7	Hazel (*Corylus*) Holly (*Ilex*) Hawthorn (*Crataegus*)	B2	150 *x 5 of*	4.0	51	Average 9m to footpath	**YES**
17	Ash *Fraxinus excelsior*	B1	450	5.4	92	8m to footpath 11m to Attenuation Pond	**YES (1)**
18	Pedunculate Oak *Quercus robur*	B1	680	8.2	209	6.5m to footpath 10m to Attenuation Pond	**YES (1)**
Grp 8	Sweet Chestnuts *Castanea sativa*	C2	Largest 560	6.7	142	Average 9m to footpath	**YES**

Tree No	Species	Cat	Stem Diam mm	BS5837:2012 Radial Protection Area m	BS5837:2012 Polygon Area m^2	Distance from Site Features (see key above)	Can Tree Be Retained
19	Silver Birch *Betula pendula*	**U**	450	n/a	n/a	n/a	**NO-RSAM**
20	Ash *Fraxinus excelsior*	B1	370	4.4	62	12m to footpath	**YES**
21	Ash *Fraxinus excelsior* *x 6 of*	B2	Largest 300 350	5.5	96	12m to footpath	**YES**
22	Pedunculate Oak *Quercus robur* *x 2 of*	B2	880	10.6	350	12m to footpath	**YES**
23	Pedunculate Oak *Quercus robur*	A1	650	7.8	191	12m to footpath	**YES**
Grp 9	Sweet Chestnut (*Castanea*) Wild Apple (*Malus*)	B2	Largest 380 250 360 340	8.1	205	12m to footpath	**YES**
24	Pedunculate Oak *Quercus robur*	B1	460 330	6.8	145	10m to footpath	**YES**
25	Pedunculate Oak *Quercus robur*	C1	550 330 300	8.5	227	10m to footpath	**YES**
26	Pedunculate Oak *Quercus robur*	B1	460 290	6.5	134	10m to footpath	**YES**
27	Pedunculate Oak *Quercus robur*	C1	440	5.3	88	9m to footpath	**YES**
28	Pedunculate Oak *Quercus robur*	A1	600 440	8.9	250	10m to footpath	**YES**
29	Pedunculate Oak *Quercus robur*	C1	430	5.2	84	10m to footpath	**YES**

Tree No	Species	Cat	Stem Diam mm	BS5837:2012 Radial Protection Area m	BS5837:2012 Polygon Area m^2	Distance from Site Features (see key above)	Can Tree Be Retained
30	Ash *Fraxinus excelsior*	C1	360 310 300 230	7.3	167	13m to footpath	**YES**
31	Pedunculate Oak *Quercus robur*	B1	480	5.8	104	12m to footpath	**YES**
32	Pedunculate Oak *Quercus robur*	C1	340 370 340	7.3	167	11m to footpath	**YES**
33	Pedunculate Oak *Quercus robur*	A1	800	9.6	290	12m to footpath	**YES**
Grp 10	Oak (*Quercus*) Ash (*Fraxinus*) Birch (*Betula*) Spruce (*Picea*)	B2	av 300	3.6	41	Average 10m to footpath	**YES**
34	Pedunculate Oak *Quercus robur*	A1	530 380 520	10.0	315	8.5m to footpath	**YES (1)**
35	Pedunculate Oak *Quercus robur* *x 2 of*	B2	Largest 540	6.5	132	9m to footpath	**YES**
36	Turkey Oak *Quercus cerris*	A1	550 650	10.2	328	9m to footpath	**YES (1)**
37	Pedunculate Oak *Quercus robur*	C1	470	5.6	100	8.5m to footpath	**YES**
38	Pedunculate Oak *Quercus robur*	C1	450	5.4	92	9m to footpath	**YES**
39	Turkey Oak *Quercus cerris*	A1	970	11.6	426	9.5m to footpath	**YES (1)**
40	Pedunculate Oak *Quercus robur*	B1 / C1	470	5.6	100	9.5m to footpath	**YES**

Tree No	Species	Cat	Stem Diam mm	BS5837:2012 Radial Protection Area m	BS5837:2012 Polygon Area m^2	Distance from Site Features (see key above)	Can Tree Be Retained
41	Pedunculate Oak *Quercus robur*	B1 / C1	490	5.9	109	9.5m to footpath	**YES**
42	Turkey Oak *Quercus cerris*	B1	500	6.0	113	10.5m to footpath	**YES**
43	Turkey Oak *Quercus cerris*	B1	700	8.4	222	10m to footpath	**YES**
44	Ash *Fraxinus excelsior*	B1	430 250 280 250 230	8.0	200	11m to footpath	**YES**
45	Pedunculate Oak *Quercus robur*	C1	450	5.4	92	10m to footpath	**YES**
Grp 11	Ash (*Fraxinus*) *x 6 of* Oak (*Quercus*) *x 1of*	**U**	av 400	n/a	n/a	n/a	**NO-RSAM**
46	Pedunculate Oak *Quercus robur*	**U**	550	n/a	n/a	n/a	**NO-RSAM**
47	Pedunculate Oak *Quercus robur*	B1 / C1	590	7.1	157	10m to footpath	**YES**
48	Pedunculate Oak *Quercus robur*	B1	650	7.8	191	11m to footpath	**YES**
49	Turkey Oak *Quercus cerris*	A1	850	10.2	327	10.5m to footpath	**YES**
Grp 12	Ash *Fraxinus excelsior*	C2	200 to 600	2.4 7.2	18 163	Average 7.5m to footpaths and ground disturbance	**YES**
50	Pedunculate Oak *Quercus robur*	A1 / B1	550	6.6	137	12m to footpath	**YES**

Tree No	Species	Cat	Stem Diam mm	BS5837:2012 Radial Protection Area m	BS5837:2012 Polygon Area m^2	Distance from Site Features (see key above)	Can Tree Be Retained
Shelt 1	Hazel (*Corylus*) Birch (*Betula*) Aspen (*Populus*) Cherry (*Prunus*) Whitebeam (*Sorbus*) Field Maple (*Acer*) Pedunc. Oak (Quercus)	A2	150 to 220	1.8 2.6	10 22	Closest is 20m to parking bays	YES

4.2 **YES**

There are **38** trees and **6** groups and **1** shelterbelt in this category on this project all of which can be retained and fully protected in accordance with BS5837 recommendations (see **Tree Protection Plan BJH.03/04** at **appendix BH4** and full listing in schedule at 4.1 above) :-

Trees: **11 Rowan (A); 12 Larch (C); 14 Birch/Alder (B); 15 Oak (A); 20 Ash (B); 21 Ash (B); 22 Oak (B); 23 Oak (A); 24 Oak (B); 25 Oak (B); 26 Oak (C); 27 Oak (C); 28 Oak (A); 29 Oak (C); 30 Ash (C); 31 Oak (B); 32 Oak (A); 33 Oak (A); 35 Oak (B); 37 Oak (C); 38 Oak (C); 40 Oak (B/C); 41 Oak (B/C); 42 Turkey Oak (B); 43 Turkey Oak (B); 44 Ash (B); 45 Oak (C); 47 Oak (B/C); 48 Oak (B); 49 Turkey Oak (A) and 50 Oak (A/B).**

G5b Oak (B/C); G5c Ash (B); G5e Oak (B); G5f Oak (B); G5h Oak (A); G5l Oak (B) and G5m Sweet Chestnut (A).

Groups : **Grp 4 Mixed Deciduous (C); Grp 7 Mixed Deciduous (B); Grp 8 Sweet Chestnut (C); Grp 9 Mixed Deciduous (B); Grp 10 Mixed Deciduous (B) and Grp 12 Ash (C).**

Shelterbelts : **Shelterbelt 1 Mixed Deciduous (A).**

4.3 **YES (1)**

There are **18** trees and **1** group in this category on this project where work will be taking place overlapping their RPA's as listed at 4.1 above and as shown on the **Tree Protection Plan BJH 03/04** and thus there will be a requirement for mitigation measures to be applied in order to provide adequate levels of root protection and ensure their safe and healthy survival:-

Trees: **1 Oak (A); 2 Oak (A); 3 Oak (A); 4 Oak (B); 5 Oak (A); 13 Sycamore (C); 16 Oak (A); 17 Ash (B); 18 Oak (B); 34 Oak (A);**
36 Turkey Oak (A) and 39 Turkey Oak (A)
G5a Oak (B); G5d Oak (B/C); G5g Ash (B); G5i Oak (B); G5j Sweet Chestnut (A); G5k Oak (A).

Groups : **Grp 6 Cypresses (C).**

N.B. Specific detail on each item is provided at Section 6 of this report under the heading Method Statement.

4.4 **NO – RTFD**

There are **0** trees within in this category on this project which are recommended for removal in order to facilitate development proposals.

4.5 **NO-RSAM**

There are **2** trees and **1** group in this category on this project which are recommended for removal for sound arboricultural reasons regardless of any redevelopment proposals:-

19 Birch (U) – Significant basal decay and slime flux ooze on trunk.

46 Oak (U) – Smothered in ivy-small leaf size-significant arching lean to south-possibly hybridised-would be left exposed.

Grp 11 Mixed Deciduous (U) – Significant dieback-small and large diameter deadwood-poor quality tree

5.0 PRE-DEVELOPMENT TREE WORKS

5.1 Undertake all of the works that are detailed at Section 3.2 of this report under the heading of Management Recommendations.

5.2 Carrying out all tree works in accordance with BS3998 recommendations.

6.0 METHOD STATEMENT - PHASING AND WORKS PROGRAM

Generic :-

6.1 All of the specified tree works are to be undertaken by an approved and experienced tree contractor prior to any construction contractors commencing works on site.

6.2 Erect the majority of the protective fencing as specified and shown on the **Tree Protection Plan BJH 03/04** at appendix BH3. Barriers are to be 'Fit For Purpose' to exclude construction activity and must be maintained to ensure that they remain rigid and complete and in the original setting out positions. These checks will need to be incorporated into a schedule of site monitoring visits to be agreed with the clients subject to phased development operations and subsequently copies of these site visit reports will need to be copied in to the Council.

6.3 A copy of the Tree Protection Plan is to be pinned up in the offices/mess hut on site for all site staff to see. The area within the fenced off exclusion zone is to be regarded as **sacrosanct** and the fencing shall not be taken down or relocated at any time without the prior written approval of the monitoring arboriculturist or local authority tree officer, unless this has already been agreed as part of the planning application consent process and is detailed in writing and shown on a plan.

The following prohibitions shall apply within the area enclosed by the Tree Protection Fencing :-

- **No** mechanical digging or scraping once the initial ground cover vegetation has been cleared and the site fenced off.
- **No** storage of plant, equipment or materials
- **No** vehicular or plant access
- **No** fire lighting
- **No** handling, discharge or spillage of any chemical substance, including cement washings
- **No** action likely to cause localised water-logging
- **No** change in ground levels

6.4 All site works storage areas and compounds/welfare units and any mixing areas are to be located outside of and well clear of retained tree RPA's.

6.5 It will be very important for any vehicle drivers to have undergone a pre-contract induction session where the trees to be retained are to be highlighted and the need for care and attention when working nearby with wide loads; tall loads; plant with swinging booms, jibs and counterweights (including drilling rigs) or slewing hydraulic arms to avoid contact with trunks or crowns.

Site Specific Measures :-

6.6 **Close Boarded Fencing - Methodology for Erection**

- The close boarded boundary fencing dividing Plots will in places run through the RPA's of retained trees to link to the outer boundary line and thus there will be a need to take precautionary measures to protect tree roots – this applies to **Oak trees 1; 2; 3; 4 & 5** and **Sycamore tree 13.**
- At the completion of all main construction activity the protective fencing can be lowered to allow access to the RPA's for the final landscaping works and fencing to be undertaken.
- Skim the existing surface vegetation with hand tools ONLY and then lay basic ground protection in the form of wooden hoarding to cater for pedestrian footfall and NO vehicles are to be allowed to travel across the ground within the trees RPA.
- Probe the locations [with hand held spike or auger] to receive support posts to make sure that there is no contact with a major root – if there is then the post hole location must be moved to one side to avoid it.
- Excavate individual post hole locations with hand tools ONLY and tease out and sever any roots (less than 25mm diameter) that may be encountered with sharp secateurs - rather than using the blunt edge of a spade.
- Lay thick polythene into the excavated post hole to protect the surrounding soil from contamination from the concrete which will be poured in around the wooden fence post.

6.7 **Garages on Plots 173 to 177**

- The garages on Plots 173 to 177 are marginally within the RPA's of **Oak trees 1 to 5** thus mitigation measures are required– however this field has been under constant agricultural management for many years and the farmer has regularly ploughed to within 2m of the trunks each season thus no major roots will be encountered in the development excavations but it would be prudent to 'Hand Dig' a slit trench (under Arb expert supervision) along the back line of the garages and to cleanly sever any fine roots of 25mm or less with secateurs.

6.7 **Tree 5 Oak**

- We are advised by the Utility Company that the construction of a new sewer link has to link to the existing system and in doing so will pass through one corner of the polygon protection zone for this tree.
- Given that this is unavoidable it must be carried out in a sympathetic way to respect tree roots which means that machinery cannot be allowed to operate in this zone until a 'hand dug' slit trench has been excavated along the back edge of the sewer trench closest to the tree and an arboricultural expert has monitored this operation.
- As roots are exposed the arb expert will sever them with sharp secateurs so that any roots that do grow through this zone are not dragged and split by the machines when they excavate the area.
- Once the hand digging exercise has been completed the machinery can be introduced to excavate the remainder of the trench that will receive the sewer pipe but only after covering any exposed ground within the trees RPA with suitable load bearing and absorbing materials such as woodchip and hoarding as per BS5837 – 6.2.3.3 b) or c) depending on the size of machine being used.

6.8 **Oak trees 16; 17; 18; 34; 36 & 39 and Oaks 5a; 5d; Ash 5g and Oak 5k.**

- The footpaths around the perimeter of the site are in places marginally overlapped by the RPA's of these trees thus mitigation measures are required.
- However this field has been under constant agricultural management for many years and the farmer has regularly ploughed to within 4m of the trunks each season thus no major roots will be encountered in the development excavations but it would be prudent to 'Hand Dig' a slit trench (under Arb expert supervision) along the back line of the footpath and to cleanly sever any fine roots of 25mm or less with secateurs.

6.9 **Oak 5i; Sweet Chestnut 5j and Grp 6 Cypresses**

- The RPA's marginally overlap areas designated to receive car parking bays.
- However this field has been under constant agricultural management for many years and the farmer has regularly ploughed to within 4m of the trunks each season thus no major roots will be encountered in the development excavations but it would be prudent to 'Hand Dig' a slit trench (under Arb expert supervision) along the back line of the parking bays and to cleanly sever any fine roots of 25mm or less with secateurs.

7.0 MONITORING & SUPERVISION

- BS5837 recommends that wherever trees on or adjacent to a site have been identified on the tree protection plan as requiring special protection measures, there should be an auditable system of arboricultural site monitoring. This should extend to direct arboricultural monitoring whenever demolition/construction and development activity is to take place within or adjacent to any RPA.
- It is suggested that for all major sites the following phased approach should be observed, but on smaller sites this would be simplified subject to agreement with the Council :-
    1. Pre-commencement site meeting between the development teams arboricultural consultant and the site manager and client representative where the full extent of arboricultural supervision/monitoring can be agreed for the project and the requirements of the AIA report and Tree Protection Plan Please note that **IF** there is a Demolition Phase to the project then the demolition contractors representative would also need to attend to gauge the constraints which will be placed on vehicle movements by the requirement to have Demolition Phase Protective Fencing erected for the duration of their works.
    2. Employ a qualified and experienced Tree Contractor to carry out all tree pruning and felling works that have been agreed with the Council.
    3. Erect the Construction Phase Protective Fencing [or extend it out from the initial Demolition Phase fencing if applicable] and apply any Ground Protection measures as recommended in the AIA report and shown on the Tree Protection Plan.
    4. Schedule a second pre-commencement meeting between the development teams arboricultural consultant and the site manager and client representative where the location of the Protective Fencing can be verified [and any adjustments to same requested] and the suitability of the materials used can also be verified [i.e. are they ‘fit for purpose’]. Subject to this all meeting the recommendations of the AIA report and as shown on the Tree Protection Plan the site may be released to the Site Manager and a letter issued by the Arboricultural Consultant to the Council verifying satisfactory completion of the initial site set-up Tree Protection measures – probably accompanied by details of how the requirements for an ongoing auditable system of arboricultural site monitoring are to be met on this project.
    5. Specifically on this site there may be need for an arb expert to monitor the following operations:-
        - Slit trenching works for footpaths and parking bays.
        - Sewer Pipe excavation works.

8.0 CONCLUSIONS

- This report covers the overall Methodology for detailed development of this Phase of the overall site development works and recommends specific mitigation measures where necessary for the layout being proposed.
- There will be no direct tree loss required to facilitate development as proposed.
- There is significant scope on this site to plant new trees of high quality [a mix of both natives around the periphery and ornamentals within the development] to enhance the site for the future and this will be detailed in the accompanying Landscape Master Plan.
- Provided that the methodology prescribed in this report is strictly adhered we are of the opinion that the retained trees will readily cope with the levels of disturbance anticipated and survive the development works without adverse impact.

MIKE SAVAGE & ASSOCIATES
Tree Care & Land Management Consultancy

Figure 1 **The design and construction process and tree care**

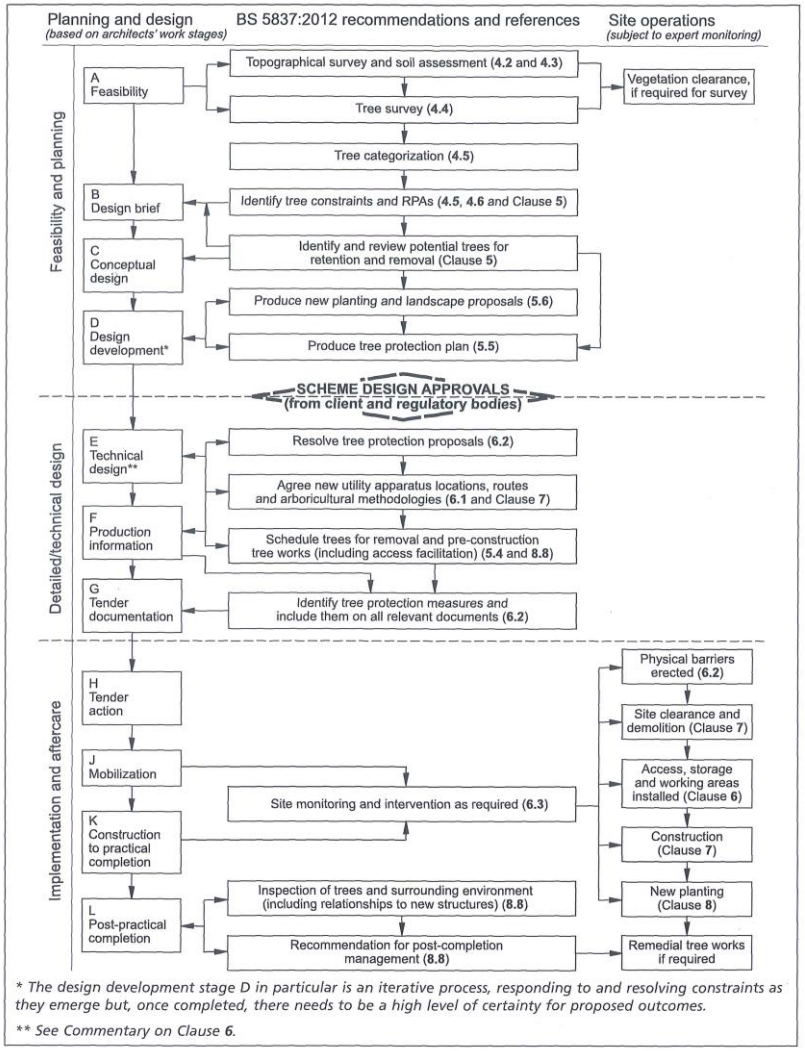

** The design development stage D in particular is an iterative process, responding to and resolving constraints as they emerge but, once completed, there needs to be a high level of certainty for proposed outcomes.*

*** See Commentary on Clause 6.*

MS/BH 1

Figure 1 - Flow Diagram
& Tree Survey Notes
& Root Protection Methodology

TREE SURVEY NOTES

These Tree Survey Notes have been prepared in accordance with the recommendations of **British Standard 5837:2012** and they define the criteria for pre –development tree surveys.

- Each tree/group/hedge/shelterbelt/woodland has been allocated a unique number (**No.**). where specifically requested and appropriate fees are agreed small durable numbered metal tags can be applied to each tree/group surveyed.
- The tree species (**Species)** is provided in both English and Latin name formats.
- Height assessments (**Ht**) are estimated in metres. This will be adequate for the majority of cases, but where accurate heights become a critical issue it may be necessary to return to site, as a separately commissioned exercise, to collect accurate measurements with the aid of optical instruments.
- Trunk/stem diameters (**Diam**) are measured in millimetres **at 1.5m above ground level** – where the tree is inaccessible the diameter is estimated as indicated by suffix **#**
- Radial crown spread assessments (**Brch Sprd**) are estimated in metres from the centre of the trunk/group to each of the four primary points of the compass (**N-**north**; E-**east**; S-**south and **W-**west**)** in order to achieve a representation of the crown shape which will be shown on the accompanying tree survey plan. These provide a general guide as to the main bulk outline of a tree/groups crown but **are not tape measured dimensions.** These would only be undertaken as part of a separately commissioned exercise, where precise dimensions are critical to the project at hand.
- Both the canopy ground clearance (**GC**) and the height & compass direction of the lowest major branch (**LMB**) are estimated and shown in metres
- An assessment of a tree/groups 'life stage' (**LS)** is made in terms of its site specific maturity as part of the surrounding landscape, taking into account its overall shape and form in that setting, and is recorded thus :-
  Y - Young tree/group; **SM - Semi**-Mature tree/group; **EM -** Early-Mature tree/group;
  M – Mature tree/group; **OM -** Over – mature tree/group
- Data on the structural condition (**Condition Comments)** of the tree/group is provided to give its visual appearance and any significant health and safety issues.
- Details of any recommended tree works required at the time of survey is given under the heading – **Preliminary Management Recommendations.**
- An estimate of a tree/groups remaining contribution in years (**RC)** is made and is recorded thus :-
  0-5; 5-10; 10-20; 20-30; 30-40 or **>40** years**.**
- The category grading (**Cat)** for each tree/group is assessed according to the criteria provided within **BS5837:2012.** The assessment is made of the tree/group in its current condition and within the environment encountered bearing in mind its suitability for retention as part of any future proposed development; although the exact layout detail of any specific scheme will not be known at the time of surveying. The trees have been classified into one of four categories and colour coded as BS5837 recommends :- **U** (dark red); **A** (light green); **B** (mid-blue) and **C** (grey).Please note that suffixed numerical sub-categories are also applied for guidance only and do not carry any cumulative or increased value for the tree/group. This colour coding scheme will be applied to all drawings provided.

Table 1 – Cascade chart for tree quality assessment

Category and definition	Criteria			Colour on plan
Trees unsuitable for retention				
Category U Those in such a condition that they cannot realistically be retained as living trees in the context of the current land use for longer than 10 years.	• Trees that have a serious, irremediable, structural defect, such that their early loss is expected due to collapse, including those that will become unviable after removal of other category U trees (i.e. where, for whatever reason the loss of companion shelter cannot be mitigated by pruning) • Trees that are dead or are showing signs of significant, immediate, and irreversible overall decline • Trees infected with pathogens of significance to the health and/or safety of other trees nearby, or very low quality trees suppressing adjacent trees of better quality NOTE Category U trees can have existing or potential conservation value which it might be desirable to preserve.			**Dark Red**
Trees to be considered for retention				
	Criteria – Subcategories			
	1	**2**	**3**	
Category A **Trees of high quality** with an estimated remaining life expectancy of at least 40 years	Trees that are particularly good examples of their species, especially if rare or unusual, or those that are essential components of groups or formal or semi-formal arboricultural features (e.g. the dominant and/or principal trees within an avenue)	Trees, groups or woodlands of particular visual importance as arboricultural and /or landscape features	Trees, groups or woodlands of significant conservation, historical, commemorative or other value (e.g. veteran trees or wood-pasture)	**Light Green**
Category B **Trees of moderate quality** with an estimated remaining life expectancy of at least 20 years	Trees that might be included in the category A, but are downgraded because of impaired condition (e.g. presence of significant though remediable defects including unsympathetic past management and storm damage), such that they are unlikely to be suitable for retention for beyond 40 years; or trees lacking the special quality necessary to merit the category A designation	Trees present in numbers, usually growing as groups or woodlands, such that they attract a higher collective rating than they might as individuals; or trees occurring as collectives but situated so as to make little visual contribution to the wider locality	Trees with material conservation or other cultural value	**Mid Blue**
Category C **Trees of low quality** with an estimated remaining life expectancy of at least 10 years, or young trees with a stem diameter below 150mm	Unremarkable trees of very limited merit or such impaired condition that they do not qualify in higher categories	Trees present in groups or woodlands, but without this conferring on them significantly greater collective landscape value, and/or trees offering low or only temporary/transient landscape benefits	Trees with no material conservation or other cultural value	**Grey**

4.6 Root Protection Area (RPA)

4.6.1 For single stem trees, the RPA should be calculated as an area equivalent to a circle with a radius 12 times the stem diameter measured at a height of 1.5m from ground level.
For trees with more than one stem, one of two calculation methods should be used as illustrated and explained below.

a) For trees with 2 to 5 stems, the combined stem diameter should be calculated as follows:

$$\sqrt{(\text{stem diameter 1})^2 + (\text{stem diameter 2})^2 \ldots \text{up to} + (\text{stem diameter 5})^2}$$

In words - measure the diameter of each of the stems – square each one and add it to the next - finally assess the square root of the combined total to derive one measurement which you look up in Table D.1 to find the radial RPA and area measurement equivalent to the area of a circle with that radius - in case you have to apply a polygon protection zone [see at 4.6.2 below].
The calculated RPA for each tree is to be capped at 707 m^2

b) For trees with more than five stems the combined stem diameter should be calculated as follows:

$$\sqrt{(\text{mean stem diameter})^2 \times \text{the total number of stems}}$$

In words – measure all of the stem diameters – add them all together and divide by the total number of stems (= mean stem diameter) –
Table D.1 to find the radial RPA and area measurement equivalent to the area of a circle with that radius - in case you have to apply a polygon protection zone [see at 4.6.2 below].

4.6.2 The RPA for each tree should initially be plotted as a circle centred on the accurate position of the trunk of the tree. Where pre-existing site conditions or other factors indicate that rooting has occurred asymmetrically, a polygon of equivalent area to the circle should be plotted instead of the circle. Modifications to the shape of the RPA should reflect a soundly based arboricultural assessment of likely root distribution.

4.6.3 Any deviation in the RPA from the original circular plot should take account of the following factors whilst still providing adequate protection for the root system:
a) the morphology and disposition of the roots, when influenced by past or existing site conditions (e.g. the presence of roads, structures and underground apparatus);
b) topography and drainage;
c) the soil type and structure;
d) the likely tolerance of the tree to root disturbance or damage, based on factors such as species, age, condition and past management.

Root Protection Area – Table D1 :

The RPA's given in Table D.1 should be used for single stem trees and the equivalent resultant combined stem diameter for multi-stemmed trees

Stem Diam. mm	Circle Rad. m	Area m^2	Stem Diam. mm	Circle Rad. m	Area m^2	Stem Diam. mm	Circle Rad. m	Area m^2	Stem Diam. mm	Circle Rad. m	Area m^2	Stem Diam. mm	Circle Rad. m	Area m^2
75	0.9	3	**310**	3.7	43	**545**	6.5	134	**780**	9.4	275	**1015**	12.2	466
80	1.0	3	**315**	3.8	45	**550**	6.6	137	**785**	9.4	279	**1020**	12.2	471
85	1.0	3	**320**	3.8	46	**555**	6.7	139	**790**	9.5	282	**1025**	12.3	475
90	1.1	4	**325**	3.9	48	**560**	6.7	142	**795**	9.5	286	**1030**	12.4	480
95	1.1	4	**330**	4.0	49	**565**	6.8	144	**800**	9.6	290	**1035**	12.4	485
100	1.2	5	**335**	4.0	51	**570**	6.8	147	**805**	9.7	293	**1040**	12.5	490
105	1.3	5	**340**	4.1	52	**575**	6.9	150	**810**	9.7	297	**1045**	12.5	494
110	1.3	5	**345**	4.1	54	**580**	7.0	152	**815**	9.8	301	**1050**	12.6	499
115	1.4	6	**350**	4.2	55	**585**	7.0	155	**820**	9.8	304	**1055**	12.7	504
120	1.4	7	**355**	4.3	57	**590**	7.1	157	**825**	9.9	308	**1060**	12.7	508
125	1.5	7	**360**	4.3	59	**595**	7.1	160	**830**	10.0	312	**1065**	12.8	513
130	1.6	8	**365**	4.4	60	**600**	7.2	163	**835**	10.0	315	**1070**	12.8	518
135	1.6	8	**370**	4.4	62	**605**	7.3	166	**840**	10.1	319	**1075**	12.9	523
140	1.7	9	**375**	4.5	64	**610**	7.3	168	**845**	10.1	323	**1080**	13.0	528
145	1.7	10	**380**	4.6	65	**615**	7.4	171	**850**	10.2	327	**1085**	13.0	533
150	1.8	10	**385**	4.6	67	**620**	7.4	174	**855**	10.3	331	**1090**	13.1	538
155	1.9	11	**390**	4.7	69	**625**	7.5	177	**860**	10.3	335	**1095**	13.1	542
160	1.9	12	**395**	4.7	71	**630**	7.6	180	**865**	10.4	339	**1100**	13.2	547
165	2.0	12	**400**	4.8	72	**635**	7.6	182	**870**	10.4	342	**1105**	13.3	552
170	2.0	13	**405**	4.9	74	**640**	7.7	185	**875**	10.5	346	**1110**	13.3	557
175	2.1	14	**410**	4.9	76	**645**	7.7	188	**880**	10.6	350	**1115**	13.4	562
180	2.2	15	**415**	5.0	78	**650**	7.8	191	**885**	10.6	354	**1120**	13.4	568
185	2.2	16	**420**	5.0	80	**655**	7.9	194	**890**	10.7	358	**1125**	13.5	573
190	2.3	16	**425**	5.1	82	**660**	7.9	197	**895**	10.7	362	**1130**	13.6	578
195	2.3	17	**430**	5.2	84	**665**	8.0	200	**900**	10.8	366	**1135**	13.6	583
200	2.4	18	**435**	5.2	86	**670**	8.0	203	**905**	10.9	371	**1140**	13.7	588
205	2.5	19	**440**	5.3	88	**675**	8.1	206	**910**	10.9	375	**1145**	13.7	593
210	2.5	20	**445**	5.3	90	**680**	8.2	209	**915**	11.0	379	**1150**	13..8	598
215	2.6	21	**450**	5.4	92	**685**	8.2	212	**920**	11.0	383	**1155**	13.9	604
220	2.6	22	**455**	5.5	94	**690**	8.3	215	**925**	11.1	387	**1160**	13.9	609
225	2.7	23	**460**	5.5	96	**695**	8.3	219	**930**	11.2	391	**1165**	14.0	614
230	2.8	24	**465**	5.6	98	**700**	8.4	222	**935**	11.2	396	**1170**	14.0	619
235	2.8	25	**470**	5.6	100	**705**	8.5	225	**940**	11.3	400	**1175**	14.1	625
240	2.9	26	**475**	5.7	102	**710**	8.5	228	**945**	11.3	404	**1180**	14.2	630
245	2.9	27	**480**	5.8	104	**715**	8.6	231	**950**	11.4	408	**1185**	14.2	635
250	3.0	28	**485**	5.8	106	**720**	8.6	235	**955**	11.5	413	**1190**	14.3	641
255	3.1	29	**490**	5.9	109	**725**	8.7	238	**960**	11.5	417	**1195**	14.3	646
260	3.1	31	**495**	5.9	111	**730**	8.8	241	**965**	11.6	421	**1200**	14.4	652
265	3.2	32	**500**	6.0	113	**735**	8.8	244	**970**	11.6	426	**1205**	14.5	657
270	3.2	33	**505**	6.1	115	**740**	8.9	248	**975**	11.7	430	**1210**	14.5	662
275	3.3	34	**510**	6.1	118	**745**	9.0	251	**980**	11.8	435	**1215**	14.6	668
280	3.4	35	**515**	6.2	120	**750**	9.0	255	**985**	11.8	439	**1220**	14.6	673
285	3.4	37	**520**	6.2	122	**755**	9.1	258	**990**	11.9	443	**1225**	14.7	679
290	3.5	38	**525**	6.3	125	**760**	9.1	261	**995**	11.9	448	**1230**	14.8	685
295	3.5	39	**530**	6.4	127	**765**	9.2	265	**1000**	12.0	452	**1235**	14.8	690
300	3.6	41	**535**	6.4	130	**770**	9.2	268	**1005**	12.1	457	**1240**	14.9	696
305	3.7	42	**540**	6.5	132	**775**	9.3	272	**1010**	12.1	462	**1245**	14.9	701
												1250	15.0	707

MIKE SAVAGE & ASSOCIATES
Tree Care & Land Management Consultancy

MS/BH 2

Combined Tree Survey & Root Protection Plans
[Extracts From]

MS/BJH 01/02

MIKE SAVAGE & ASSOCIATES
Tree Care & Land Management Consultancy

MS/BH 3

Combined Tree Retentions & Removals Plans - BH/MS 03
&
Tree Protection Plans - BH/MS 04

\+ BS5837:2012 – Figure 2

Figure 2 **Default specification for protective barrier**

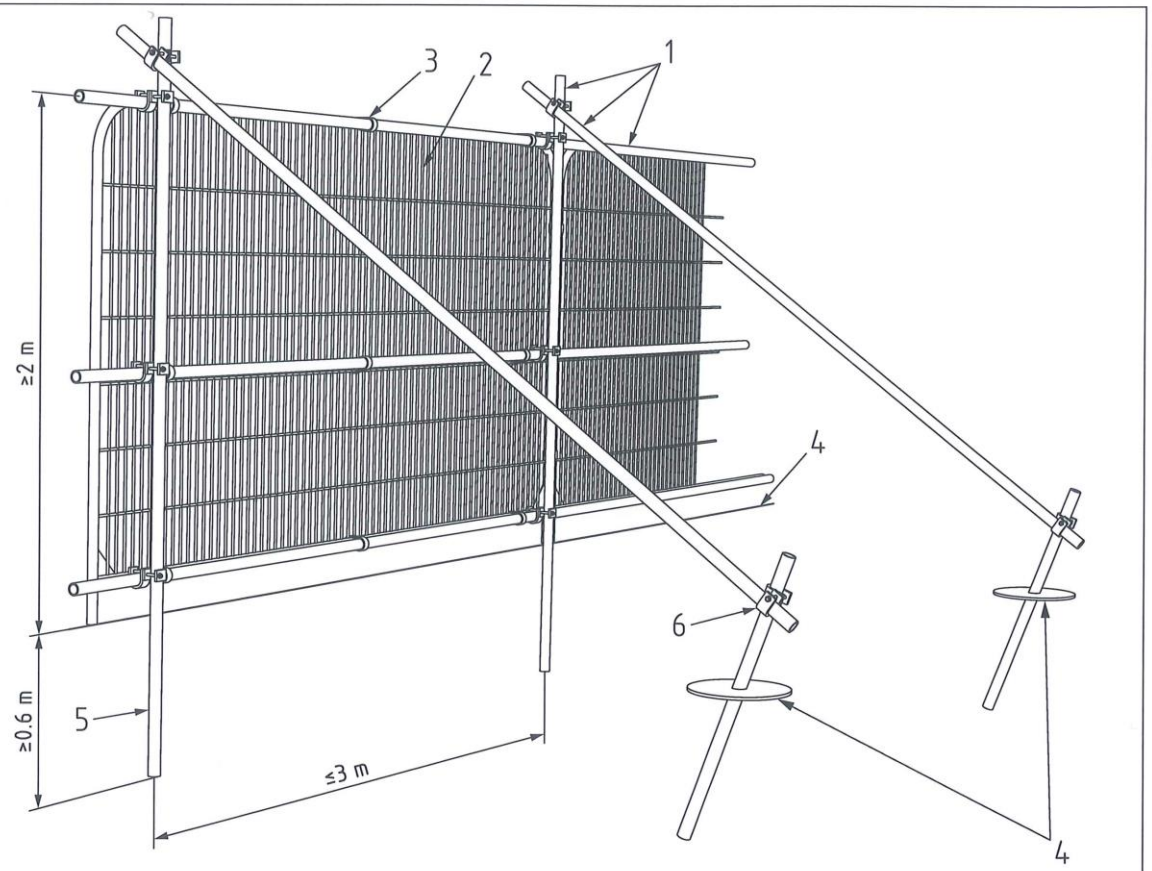

Key

1 Standard scaffold poles

2 Heavy gauge 2 m tall galvanized tube and welded mesh infill panels

3 Panels secured to uprights and cross-members with wire ties

4 Ground level

5 Uprights driven into the ground until secure (minimum depth 0.6 m)

6 Standard scaffold clamps

MIKE SAVAGE
& ASSOCIATES
Tree Care & Land Management Consultancy

MS/BH 4

Qualifications & Experience

MIKE SAVAGE & ASSOCIATES
TREE CARE & LAND MANAGEMENT CONSULTANCY

OUTLINE OF SERVICES

Mike Savage & Associates is a small, land-based consultancy practice which specialises in a wide range of professional services, particularly in Arboriculture, Silviculture, Horticulture and Conservation disciplines.

PROFESSIONAL AND ADVISORY SERVICES

• *Tree management planning and strategies*	• *Trees, Planning and Pre-development advice*
• *Management and maintenance regimes for amenity woodland and arboreta design and implementation*	• *BS5837:2012 Development Tree Surveys*
• *Tree reports for mortgage and insurance applications*	• *Tree Constraints Advice and Plans*
• *Landscape design plan, schedules and implementation*	• *Arboricultural Implications Assessment*
• *Tree specification and tendering agreements*	• *Arboricultural Method Statements and Tree Protection Plans*
• *Amenity evaluation, conservation and environmental appraisals*	• *Development site monitoring and supervision of trees on development sites*
• *Motorway and rural roadside tree and wild flower surveys*	• *Tree Safety Audits*
• *Health and Safety reports*	• *Tree Litigation work – expert witness – Planning appeals – hearings and public local inquiries*
• *Full climbing inspections to better understand the condition of a given tree before prescribing a management strategy*	• *Professional implementation of all services carried out in accordance with all British Standards appertaining to trees on a contractual basis when required*

CONSULTANCY PERSONNEL

The Company operates across the south of England with two consultants who between them have over 90 years of experience, backed up by qualifications in several land-based disciplines.

QUALIFICATIONS

National Diploma in Arboriculture, Horticulture, and Amenity Management
RFS Certificate in Forestry - Arboriculture

PROFESSIONAL ORGANISATIONS

Arboricultural Association
Linnaean Society
Professional Foresters Association Royal Forestry Society
Royal Horticultural Society

Mike Savage & Associates
"Wedgewood House"
14 Burnsall Close
FARNBOROUGH
Hants. GU14 8NN

Tel Nos: 01252 546800 / 07885 629525
E-mail: mikesavage02@yahoo.com
bernie.harverson@virgin.net

INSURANCE

The Company holds all necessary insurance cover, e.g. professional indemnity and public liability insurance as required for the land-based industries.
/