

Existing Elevations
Scale 1:50

Contractor to check all dimensions prior to demolition to ensure that the porch structure is rebuilt to match the original structure.

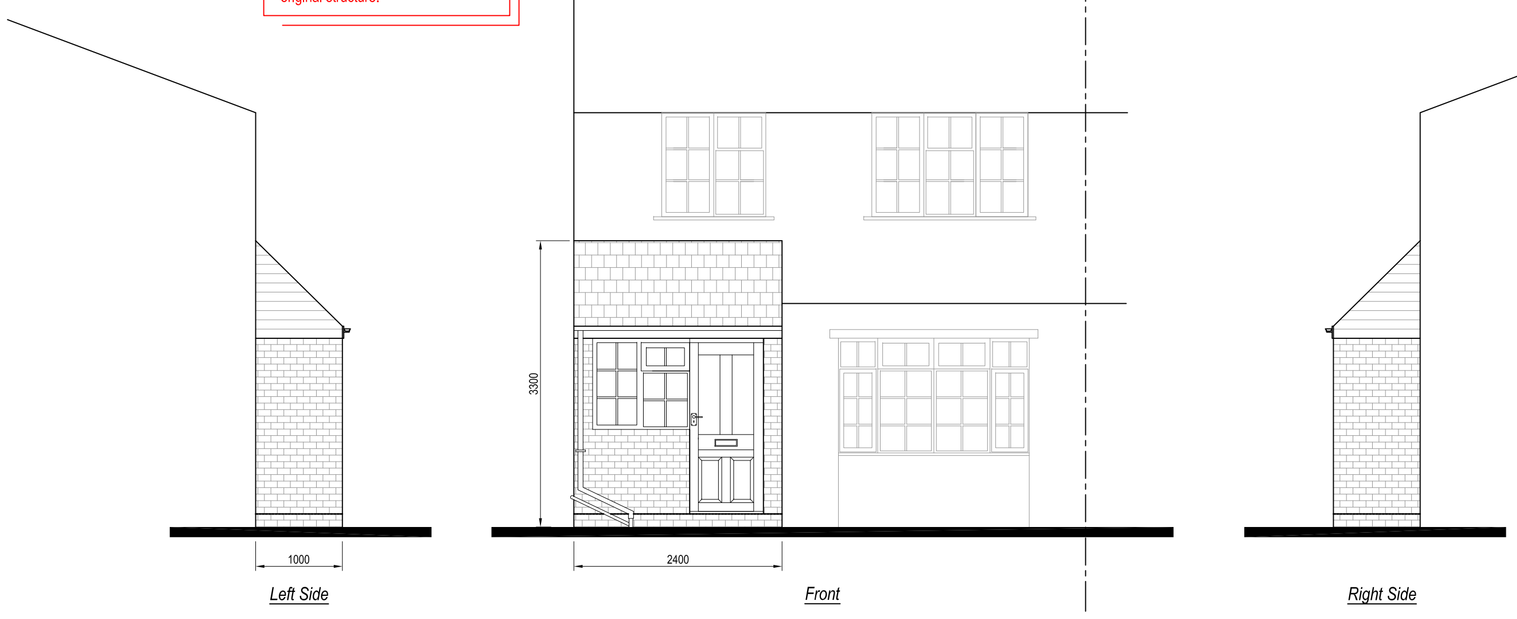

Proposed Elevations
Scale 1:50

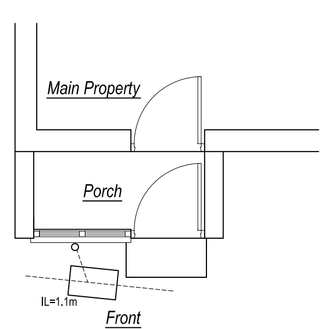

Existing Plan
Scale 1:50

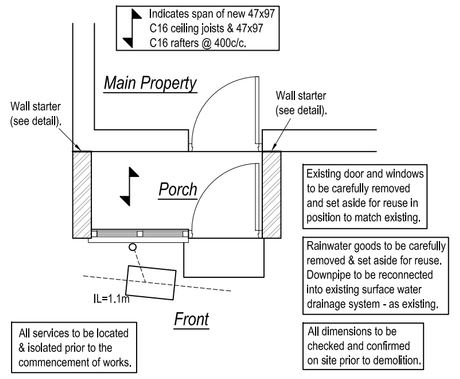

Reconstruction Plan
Scale 1:50

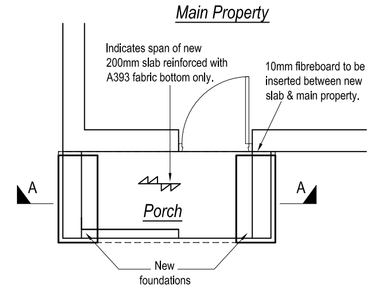

Foundation Plan
Scale 1:50

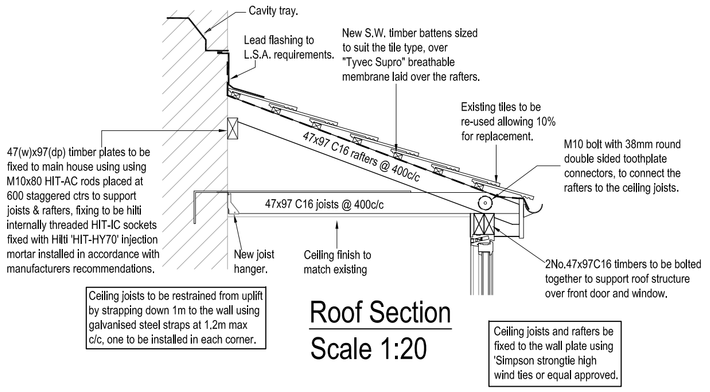

Roof Section
Scale 1:20

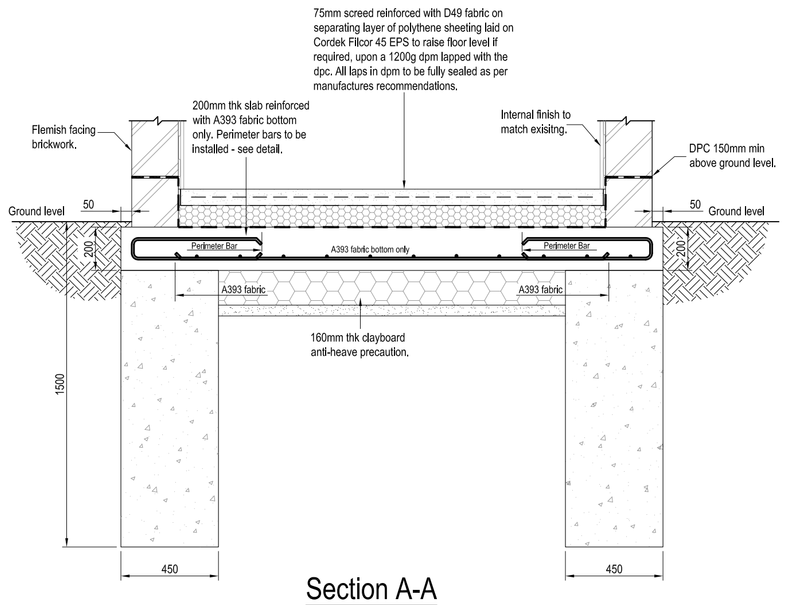

Section A-A
Scale 1:20

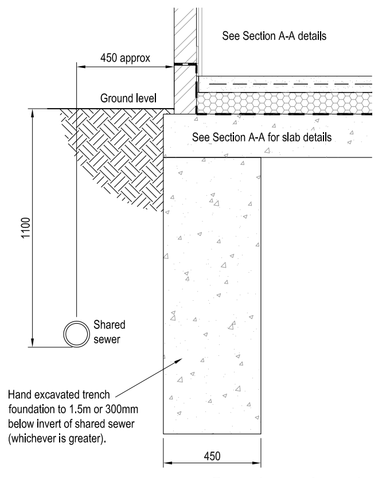

Section showing foundation in relation to sewer
Scale 1:20

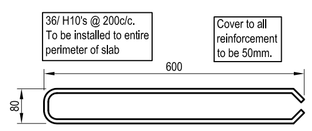

Perimeter Bar Detail
Scale 1:10

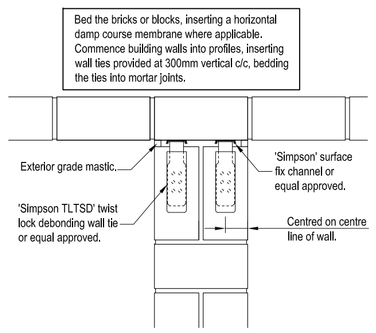

Wall Starter Detail
Scale 1:10

0.0m 1m 2m 3m 4m 5m

Scale 1:50

SUBJECT TO LOCAL WATER AUTHORITY APPROVAL NOT FOR CONSTRUCTION

SUBJECT TO LOCAL PLANNING AUTHORITY APPROVAL NOT FOR CONSTRUCTION

PLEASE NOTE LOCAL BUILDING CONTROL APPROVAL IS NOT REQUIRED

THIS DRAWING WAS PRODUCED AT A1

Electrical System
To be designed and installed by a suitably qualified Electrical Engineer. Design and installation shall comply with Building Regulations Part P, and BS 7671.
Proper design, installation, inspection and testing of electrical installations is required to protect persons from fire or injury.
Electrical installations to be inspected and tested during and at the end of Installation, before they are taken into service. Test certificate to be issued to Building Control on completion of the works.
All sockets and switches are to be situated at appropriate heights between 450mm and 1200mm above finished floor level. Socket and switch boxes are not to be situated back-to-back.

Reinforcement
Unless noted otherwise all cover is to be 50mm to all steel to all faces.
All spacers required for the correct installation of the reinforcement are to be proprietary spacers and shall be supplied by the Contractor.
All steel denoted 'H' to be deformed bars type 2, high yield Grade B500 A, B or C to BS 4449 and, if required, bent in accordance with BS 8666.
Unless noted otherwise on the drawings, minimum laps to be:-
- 400mm minimum for H10 bars.
- 400mm minimum for fabric.

Lead Work
All lead work to be in accordance with all LSA requirements current at time of installation.

Drainage
Rainwater goods to be carefully removed and set aside for re-use in positions to match existing. Downpipes to be re-connected to the existing surface water drainage system.

General
This drawing is to be read in conjunction with Cunningham Lindsey / Oriel standard contract documentation and all other relevant documents, unless alternative arrangements have been agreed with the Contract Administrator.
Do not scale this drawing, except for Planning purposes. The Contractor shall check all dimensions and levels on site prior to demolition of the existing structure. Any discrepancies shall be notified immediately to the Contract Administrator and the Design Engineer. All dimensions shown include finishes.
Layout of the works is to remain unaltered unless otherwise agreed with the Contract Administrator and the Design Engineer.
Contractor shall locate all services (including overhead) prior to commencement of any works on site and liaise with the Contract Administrator.
All temporary works are to be designed and detailed by the Contractor, including the provision for pumping, shoring & propping. Design to be undertaken by a suitably qualified professional.
All excavations and exposed foundations are to be adequately supported and protected by the Contractor at all times in accordance with Health & Safety requirements.
All materials to be fit for purpose and all works, whether specified or implied, to be in accordance with current Building Regulations, British Standards, Codes of Practice and accepted good building practice.
All proprietary products are to be installed strictly in accordance with the manufacturers recommendations.
On completion of the works the Contractor shall be responsible for reinstating the surrounding ground finished surfaces to their original state.
The structural design has been prepared in accordance with the CDM Regulations. In addition to the usual risks associated with building works and materials the Contractor should also ensure;
- that demolition, excavation, drilling, cutting etc into existing structures or materials be carried out carefully in case there are any hidden services
- that all items to be demolished or removed, eg walls, beams, slabs etc, are assessed for any loadbearing or stability function and temporary propping provided as necessary
- that any existing structure or materials to be drilled, cut, or otherwise disturbed, be checked for asbestos content and appropriate action taken

Walls
External leaf: 215mm Flemish bond facing brickwork to match existing laid in M4 (iii) mortar to side elevations, and 102.5mm facing brickwork laid in M4 (iii) mortar to front elevation.
Cavity trays to be provided above all openings and where a roof abuts a cavity wall.
They should also be provided where the cavity is bridged by air bricks, meter boxes etc., extending 150mm min beyond the ends of the bridging. In areas of very severe exposure to driving rain a vertical dpm shall be provided behind meter boxes.
Where a new wall abuts an existing wall, a wall starter profile is to be provided in accordance with manufacturers recommendations (refer to detail for further information).
A vertical dpc is to be inserted at the junction of new and existing cavity walls where the existing runs through the cavity (see detail).
Unless noted otherwise on the drawing masonry construction locally below lintel bearings to be minimum of 35 N/mm² bricks or 10.4 N/mm² blocks laid in class M4 (iii) mortar in accordance with BS 5628.
All masonry below ground level to be suitable for purpose, as designated by brick/block manufacturer, laid in class M6 (ii) mortar. Concrete blocks should not be used below dpc level where there are sulphates in the ground, unless suitability is confirmed by the block manufacturer. Where sulphate levels are class 3 or higher Sulphate Resisting Portland Cement (SRPC) to be used for the mortar.
Brickwork bond/thickness shown on details are for illustration purposes only - refer to plans and Masonry specification for clarification of wall construction.

Timber
Structural timber to be in accordance with BS 5268, to grade or strength class shown on the drawing. All timber sizes, spacings and grades quoted are minimum to be used. Any variation to be agreed with the Engineer prior to installation. Unless noted otherwise on the drawing all fixing and connection details to be agreed with the Contact Administrator and Design Engineer prior to installation. Any fixing and connection details that are shown on the drawings are to be adhered to unless agreed otherwise with the Engineer. A clearance of 25-75mm between the first joist and the face of the wall should be allowed.
All new timber to be stopped, knotted and treated. All structural softwood timber to be treated with CCA type preservatives applied by vacuum pressure process in accordance with Table 4 of BS5268:Part 5.
All timber connections to utilise suitable connectors by 'Simpson' Strong Tie or similar proprietary connectors approved by the Design Engineer.
Where restraint type joist hangers are specified do not use alternatives without written approval from the Design Engineer.
All holes and notches in timber members shall be comply with BS 8103 Part 3 and NHBC Standard 6.4
All trimmers to be bolted together using M10 bolts to BS 916, placed through close tolerance predrilled holes at approximately 500mm c/c, with a minimum of 3 bolts per trimmer. The first bolt is to be at approximately 150mm from each end and the bolt spacings are to be approximately equal. No load shall be applied until all the bolts have been fully installed.

Concrete
All work to be in accordance with BS 8110. All mass concrete for foundations to be minimum FND2, with Sulphate Resisting Portland cement.
All reinforced concrete to be Grade C28/35 with 20mm max aggregate, minimum cement content of 280 kg / m³, and to have Class 2 sulphate resistance. The water:cement ratio to be 0.6. All concrete shall be vibrated.
No site batching unless authorised by Contract Administrator and the Design Engineer, and shall not be permitted for reinforced concrete.
The foundation design is based on a Gross Ground Bearing Capacity of 100 kN/m² and it has been assumed that there is no substantial variation in soil quality over the area of the site.
Depths of foundations shown may be subject to variation on site once the subsoil has been exposed.
It must not be inferred that on completion of the work any of the foundations will comply with the Building Regulations (or the NHBC) requirements for new buildings.
No holes may be formed through any concrete member without written approval from the Design Engineer.
No reinforcement may be cut or bent without written approval from the Design Engineer.
All dimensions to be verified on site by the Contractor and any discrepancies shall be immediately notified to the Contract Administrator and the Design Engineer. The layout of the works is to remain unaltered unless agreed otherwise with the Contract Administrator and the Design Engineer.

REV	DRAWN	DATE	DESCRIPTION
A	MS	14.02.14	Drawing approved by CL.

Oriel
1st Floor Design Office, Solent House,
Solent Business Park, Whiteley,
Fareham, Hampshire PO15 7AF

JOB ID
Phillips & Doherty

SITE ADDRESS
3 Scotter Square
Eastleigh
Hants
SO50 6DP

PROJECT
Demolition and Reconstruction of Porch on New Trench Fill Foundatio

DRAWING TITLE
Plans, Elevations, Sections and Details

INITIAL DRG DATE	DRAWN BY
February 2014	MS
SCALE: As Shown	CHECKED BY: .

REFERENCE	DRG No.	Rev.
7471274	101	A