Culvert	Diameter	Inlet				Outlet				Culvert
		Bed Level	Inv. Level	Wall Level	Width	Bed Level	Inv. Level	Wall Level	Width	Gradient
2	750ø#	24.420	24.370	25.500	3000mm	24.275	24.125	25.200	3000mm	1:532
3	750ø#	24.200	24.050	25.150	3000mm	24.105	23.955	25.000	3000mm	1:105
4	750ø#	23.905	23.755	24.850	3000mm	23.305	23.155	24.250	3000mm	1:51
5	750ø#	24.895	24.745	25.800	3000mm	24.845	24.695	25.750	3000mm	1:110
6	750ø#	21.845	21.695	22.750	3000mm	21.805	21.655	22.800	3000mm	1:275
7	750ø#	21.730	21.580	22.650	3000mm	21.680	21.530	22.600	3000mm	1:70

Size of culvert to be confirmed during detailed design

Table 1: Headwall Details

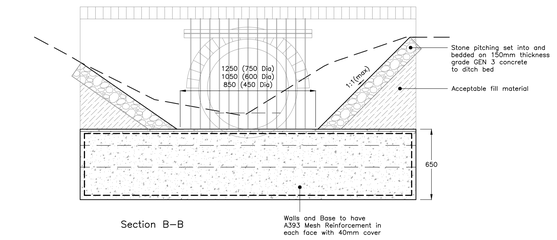

Section B–B

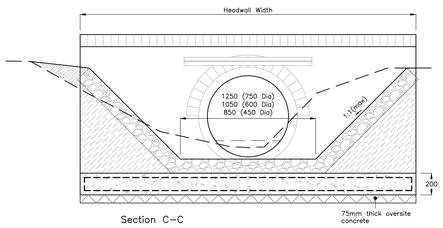

Section C–C

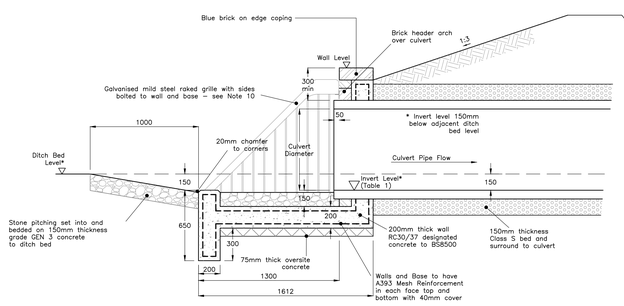

Section A–A

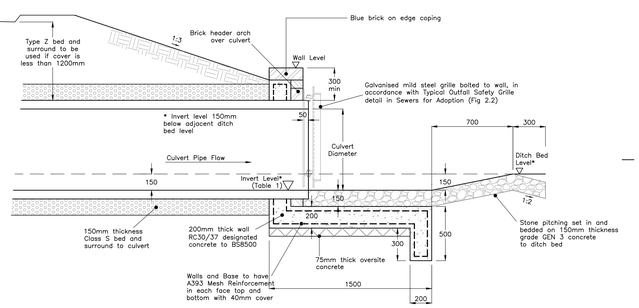

Section D–D

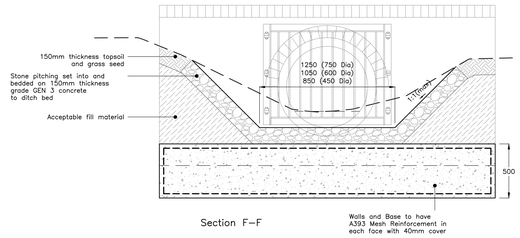

Section F–F

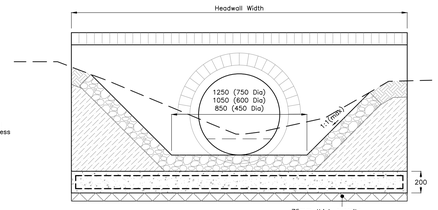

Section E–E

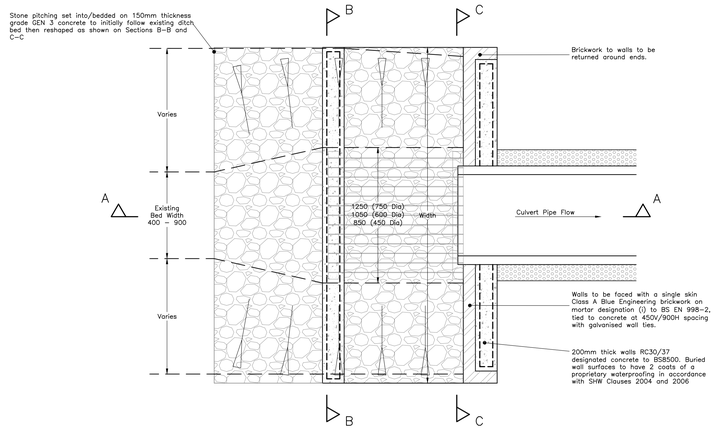

Typical Ditch Culvert Inlet Headwall
Plan
Scale 1:20

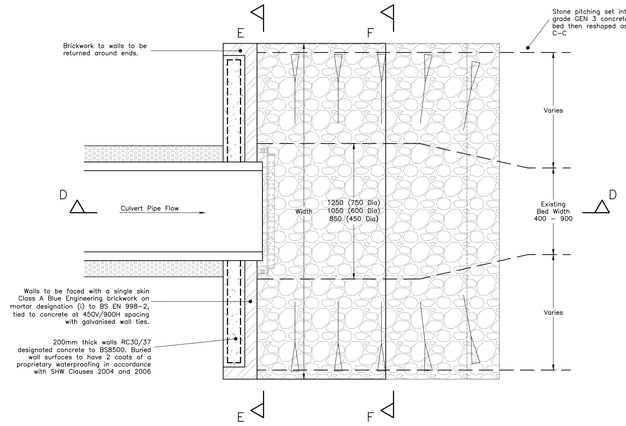

Typical Ditch Culvert Outlet Headwall
Plan
Scale 1:20

Typical Basin Inlet
Scale 1:20

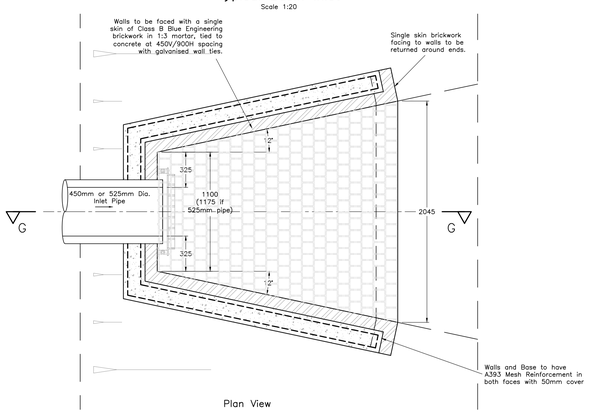

Plan View

Typical Basin Outlet
Scale 1:20

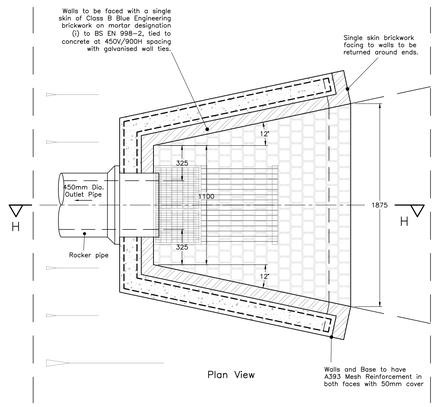

Plan View

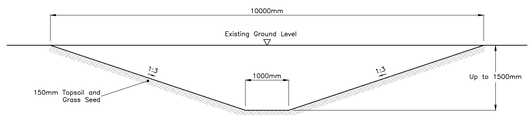

Typical Swale Section
Scale 1:50

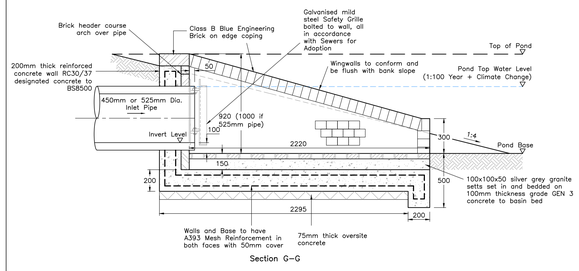

Section G–G

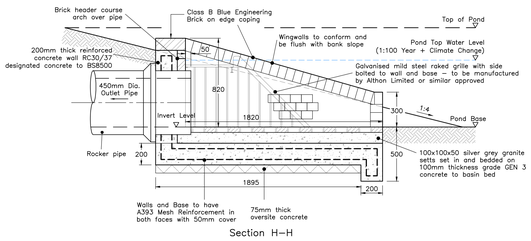

Section H–H

PFA consulting

Stratton Park House, Wanborough Road
Swindon, SN3 4HG

Telephone
01793 828000

Website
www.pfaplc.com

For Planning
These drawings are produced for the purposes of supporting a planning application and should not be relied upon for tender, pricing, or construction purposes.

NOTES

1. All adoptable highway works to be constructed in accordance with Hampshire County Council's (HCC) current Highway Standard Details and the Specification for Highway Works (Consolidated Edition) November 2005 (SHW), published by The Stationery Office, as amended.

2. All drainage works shall be constructed in accordance with the document 'Sewers for Adoption – A Design and Construction Guide for Developers' 7th Edition as amended, published by WRC plc. All components to be kite marked. Any conflict between the proposals and Sewers for Adoption then Sewers for Adoption shall overide.

3. All in–situ concrete and precast concrete components to be designed to BRE Special Digest 1 Concrete in Aggressive Ground.

4. All buried concrete surfaces to have 2 coats of a proprietary bitumen waterproofing in accordance with SHW clauses 2004 and 2006.

5. Concrete to be RC30/37 designated concrete to BS 8500.

6. Min 300mm thickness class 6N granular material fill to be placed behind walls.

7. All mesh to have minimum lap length of 400mm.

8. Outfall structure details based on the Environment Agency's Fact Sheet FD3 'Summary of Requirements for Outfalls'. Culvert Inlet/Outfall details based on CIRIA Report 168 'Culvert Design Guide'.

9. Grilles to be manufactured by:

Althon Limited
Vulcan Road South,
Norwich
Norfolk
NR6 6AF

Tel: 01603 488700
Fax: 01603 488598
E–mail: sales@althon.co.uk

or similar approved.

10. Subject to Detailed Design.

Rev	Date	Description	Drawn	Check
#	24/10/19	First Issue.	DRB	CI

Status
FOR PLANNING

Client
miller homes

Project
Boorley Gardens
Winchester Road
Hedge End
Phase 3

Drawing Title
Planning Application
Headwall Details

Drawing No.
M380/124

Date: October 2019 | Scale: As Shown @ A0

E-Mail: dbrock@pfaplc.com