Cowan Consultancy

STRUCTURAL, CIVIL AND BUILDING CONSULTANTS

SHOLING FC

PORTSMOUTH ROAD, SHOLING, HAMPSHIRE, SO19 9PW

SURFACE WATER DRAINAGE DESIGN

On Behalf of:

Sholing FC

Cowan Consultancy Ltd
3 Turnberry House
4400 Parkway
Whiteley
Fareham
Hampshire
PO15 7FJ

Telephone: 01489 577488
Fax: 01489 579873

www.cowanconsult.co.uk
consultants@cowanconsult.co.uk

Landguard Manor
Landguard Manor Road
Shanklin
Isle of Wight
PO37 7JB

Telephone: 01983 868497
Fax: 01983 865781

www.cowanconsult.co.uk
iow@cowanconsult.co.uk

TB/424686/eg

APR 2026

Cowan Consultancy
STRUCTURAL, CIVIL AND BUILDING CONSULTANTS

LAYOUTS & DETAILS

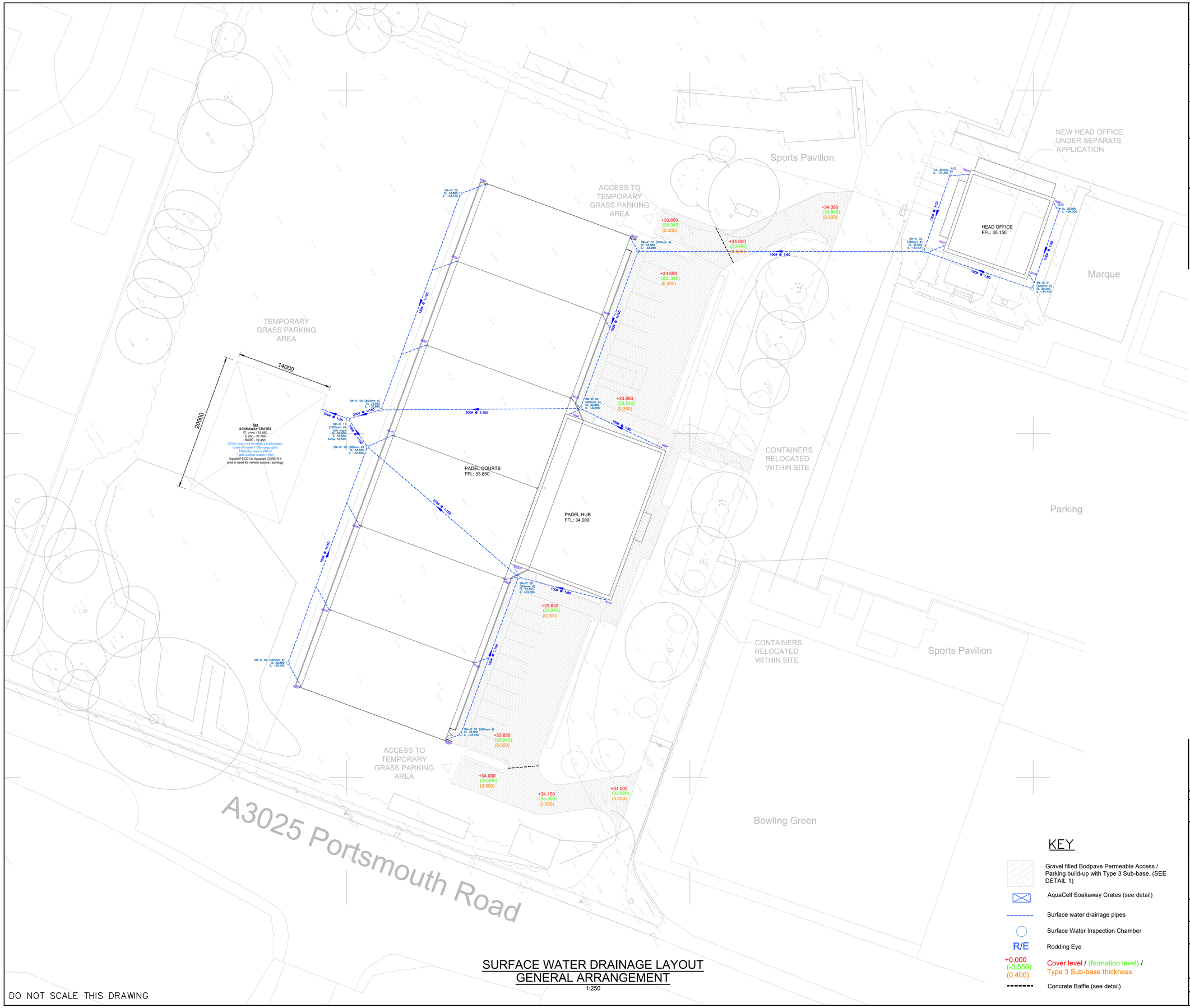

SURFACE WATER DRAINAGE LAYOUT
GENERAL ARRANGEMENT

1:250

DO NOT SCALE THIS DRAWING

KEY

- Gravel filled Bodpave Permeable Access / Parking build-up with Type 3 Sub-base. (SEE DETAIL 1)
- AquaCell Soakaway Crates (see detail)
- Surface water drainage pipes
- Surface Water Inspection Chamber
- R/E — Rodding Eye
- +0.000 (-0.550) (0.400) — Cover level / (formation level) / Type 3 Sub-base thickness
- Concrete Baffle (see detail)

! CDM 2015 - RESIDUAL RISKS !

In preparing the designs illustrated by this drawing we have fulfilled our duties in the role of Designer as defined in the Construction Design and Management Regulations 2015. We have undertaken a full Hazard Identification and Risk Analysis and have designed out any special risks associated with the work, so that as far as possible there are no residual risks.

NOTE: Residual risks are defined as those risks arising from identified hazards which cannot be designed-out, and which a competent and experienced building contractor is unlikely to encounter during normal construction activities. Ordinary risks arising from normal construction operations have not been included.

Where hazards have been identified, the risks from which it has not been possible to eliminate during the design process, these are indicated on the drawing. It will be the responsibility of the Principal Contractor to develop Safe Systems of Work and/or Method Statements to minimise any risks associated with such hazards.

NOTE: It is incumbent on the subcontractors and installers to making themselves familiar with the current industry standards relating to their works as well as reviewing and installing such works in accordance with the current Building Regulations, British Standards, NHBC Standards, Standards Compliance Guides, Industry Association Standards and the product data sheets such as BBA certification and manufacturer's instructions.

NOTES

1. This drawing has been prepared using a Site Plan Drawing supplied by the client in AutoCAD format.

2. This drawing is to be read in conjunction with all relevant Engineers' and Architects' drawings and specifications.

3. All dimensions are in millimetres unless noted otherwise. All levels are in metres.

4. The contractor is responsible for setting out and for checking dimensions.

5. In accordance with The Construction (Design and Management) Regulations 2015 (CDM 2015) the Principle Designer and Contractor are to:
   - Notify HSE of works.
   - Comply with the requirements of Health and Safety Plan (if applicable)
   - Provide risk assessments and method statements for all potential hazards relevant to this project.

6. The main contractor shall be responsible for the setting out and accuracy of all dimensions. The contractor shall be satisfied that the information given is correct and any discrepancies should be noted to the Engineer immediately.

7. The Contractor is responsible for specifying product and codes and ordering of drainage materials.

8. Cover grades are in accordance with BS497 Pt 1
Cover Grades : D400 - carriageways.
B125 - carriageways for slow traffic.
A15 - inaccessible to vehicles

9. All drainage pipes within development site to be 100mm dia unless shown otherwise.

10. All uPVC drainage to be installed to BS5955 Pt6 and in strict accordance with the manufacturers instructions.

11. All uPVC drainage products to conform to BS EN1401 & Kite mark certified in accordance with specification.

12. DO NOT SCALE. If discrepancy or query arises on dimensions consult Engineer.

Date	By	Revision	QA'D	Chk'd	Ref

Status: PRELIMINARY

Cowan Consultancy
STRUCTURAL, CIVIL AND BUILDING CONSULTANTS
3 Turnberry House
4400 Parkway
Whiteley
Fareham
Hampshire
PO15 7FJ

Also at:
Landguard Manor
Landguard Manor Road
Shanklin
Isle of Wight
PO37 7JB

Tel: 01489 577488
Fax: 01489 579873
consultants@cowanconsult.co.uk
www.cowanconsult.co.uk

Client: SHOLING FC

Project: Sholing FC, Portsmouth Road
Sholing, Southampton, Hampshire, SO19 9PW

Title: DRAINAGE GA LAYOUT

Date	Scale	Drg. No.
Apr 2026	As Shown @ A1	424686-201P1
Drawn: TB	Chk'd: EG	QA'D

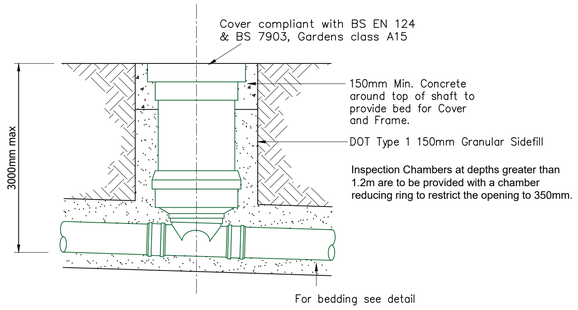

450mmø INSPECTION CHAMBER GRADE 'A' NON–LOAD BEARING INSTALLATION

1:10

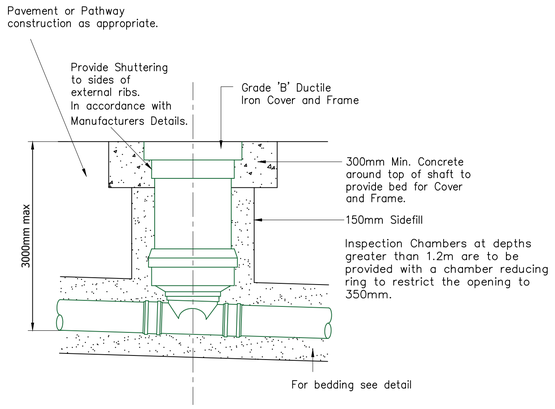

450mmø INSPECTION CHAMBER GRADE 'B' LOAD BEARING INSTALLATION

1:10

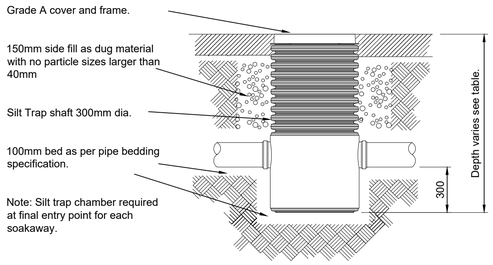

TYPICAL DETAIL FOR SILT TRAP NON-LOAD BEARING AREAS

1:20

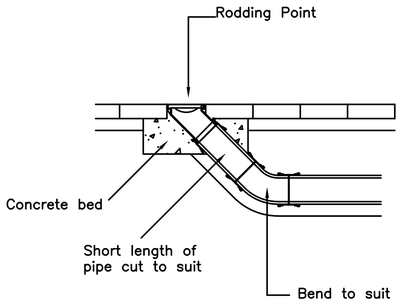

RODDING EYE

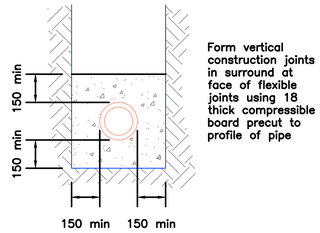

CLASS Z

Cover less than 0.6m pedestrian areas
Cover less than 0.9m vehicular areas
Pipe runs near buildings

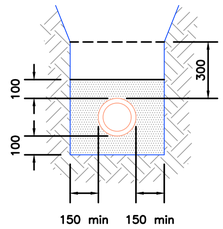

CLASS T (PVC-U PIPES)

Cover 0.6m - 6.0m pedestrian areas
Cover 0.9m - 6.0m vehicular areas

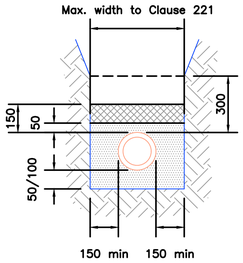

CLASS S (RIGID PIPES)

Cover 0.6m - 6.0m pedestrian and vehicular areas

LEGEND

GRANULAR MATERIAL TO BS 882

SELECTED FILL

CONCRETE MIX GEN3 C16/20

SELECTED FILL:
Fill free from vegetable matter, rubbish, frozen soil and material retained on a 40 mm sieve. Compacted by hand in 100 mm layers.

PIPE BEDDING DETAILS

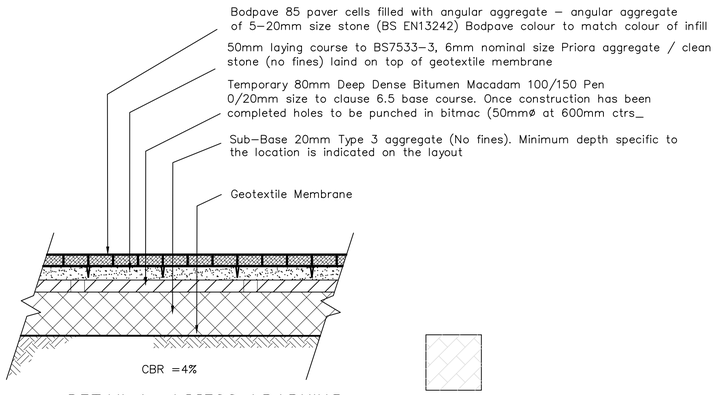

DETAIL 1 - ACCESS / PARKING CONSTRUCTION - TYPICAL SECTION

SCALE 1: 20

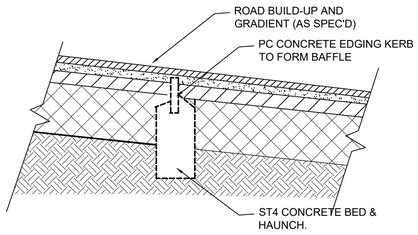

TYPICAL DETAIL - CONCRETE BAFFLE WITHIN PERMEABLE PAVED BUILD-UP

SCALE 1:20

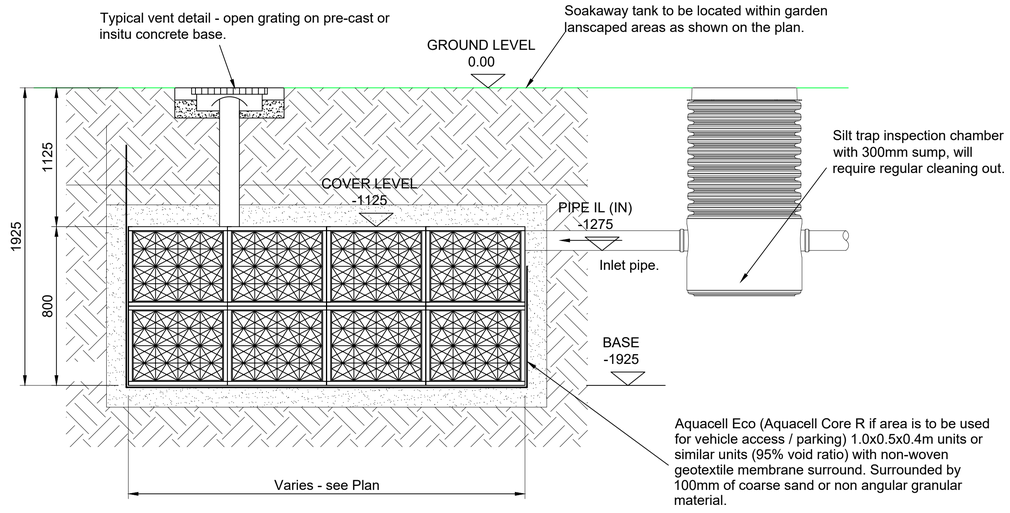

TYPICAL SECTION STORM WATER SOAKAWAY DETAIL GARDEN AREAS

1:15

DO NOT SCALE THIS DRAWING

! CDM 2015 - RESIDUAL RISKS !

In preparing the designs illustrated by this drawing we have fulfilled our duties in the role of Designer as defined in the Construction Design and Management Regulations 2015. We have undertaken a full Hazard Identification and Risk Analysis and have designed out any special risks associated with the work, so that as far as possible there are no residual risks.

NOTE: Residual risks are defined as those risks arising from identified hazards which cannot be designed-out, and which a competent and experienced building contractor is unlikely to encounter during normal construction activities. Ordinary risks arising from normal construction operations have not been included.

Where hazards have been identified, the risks from which it has not been possible to eliminate during the design process, these are indicated on the drawing. It will be the responsibility of the Principal Contractor to develop Safe Systems of Work and/or Method Statements to minimise any risks associated with such hazards.

NOTES

1. This drawing has been prepared using a Topsoil/Subsoil/Crushed Concrete Supplied by the client. CCC cannot confirm the accuracy of the information provided.

2. This drawing is to be read in conjunction with all relevant Engineers' and Architects' drawings and specifications.

NOTES

3. All dimensions are in millimetres unless noted otherwise. All levels are in metres.

4. The contractor is responsible for setting out and for checking dimensions.

5. In accordance with The Construction (Design and Management) Regulations 2015 (CDM 2015) the Principle Designer and Contractor are to:
   - Notify HSE of works.
   - Comply with the requirements of Health and Safety Plan (if applicable)
   - Provide risk assessments and method statements for all potential hazards relevant to this project.

6. The main contractor shall be responsible for the setting out and accuracy of all dimensions. The contractor shall be satisfied that the information given is correct and any discrepancies should be noted to the Engineer immediately.

7. The Contractor is responsible for specifying product and codes and ordering of drainage materials.

8. Cover grades are in accordance with BS497 Pt 1
   Cover Grades : D400 - carriageways.
   B125 - carriageways for slow traffic.
   A15 - inaccessible to vehicles

9. All drainage pipes within development site to be 100mm dia unless shown otherwise.

10. All uPVC drainage to be installed to BS5955 Pt6 and in strict accordance with the manufacturers instructions.

11. All uPVC drainage products to conform to BS EN1401 & Kite mark certified in accordance with specification.

12. DO NOT SCALE. If discrepancy or query arises on dimensions consult Engineer.

Date	By	Revision	QA'D	Chk'd	Ref

Status: PRELIMINARY

Cowan Consultancy
STRUCTURAL, CIVIL AND BUILDING CONSULTANTS
3 Turnberry House
4400 Parkway
Whiteley
Fareham
Hampshire
PO15 7FJ

Also at:
Landguard Manor
Landguard Manor Road
Shanklin
Isle of Wight
PO37 7JB

Tel: 01489 577488
Fax: 01489 579873
consultants@cowanconsult.co.uk
www.cowanconsult.co.uk

Client: SHOLING FC

Project: Sholing FC, Portsmouth Road
Sholing, Southampton, Hampshire, SO19 9PW

Title: DRAINAGE DETAILS

Date	Apr 2026	Scale	As Shown @ A1	Drg. No.
Drawn	TB	Chk'd	EG	QA'D	424686–202P1

Cowan Consultancy
STRUCTURAL, CIVIL AND BUILDING CONSULTANTS

CALCULATION REFERENCES

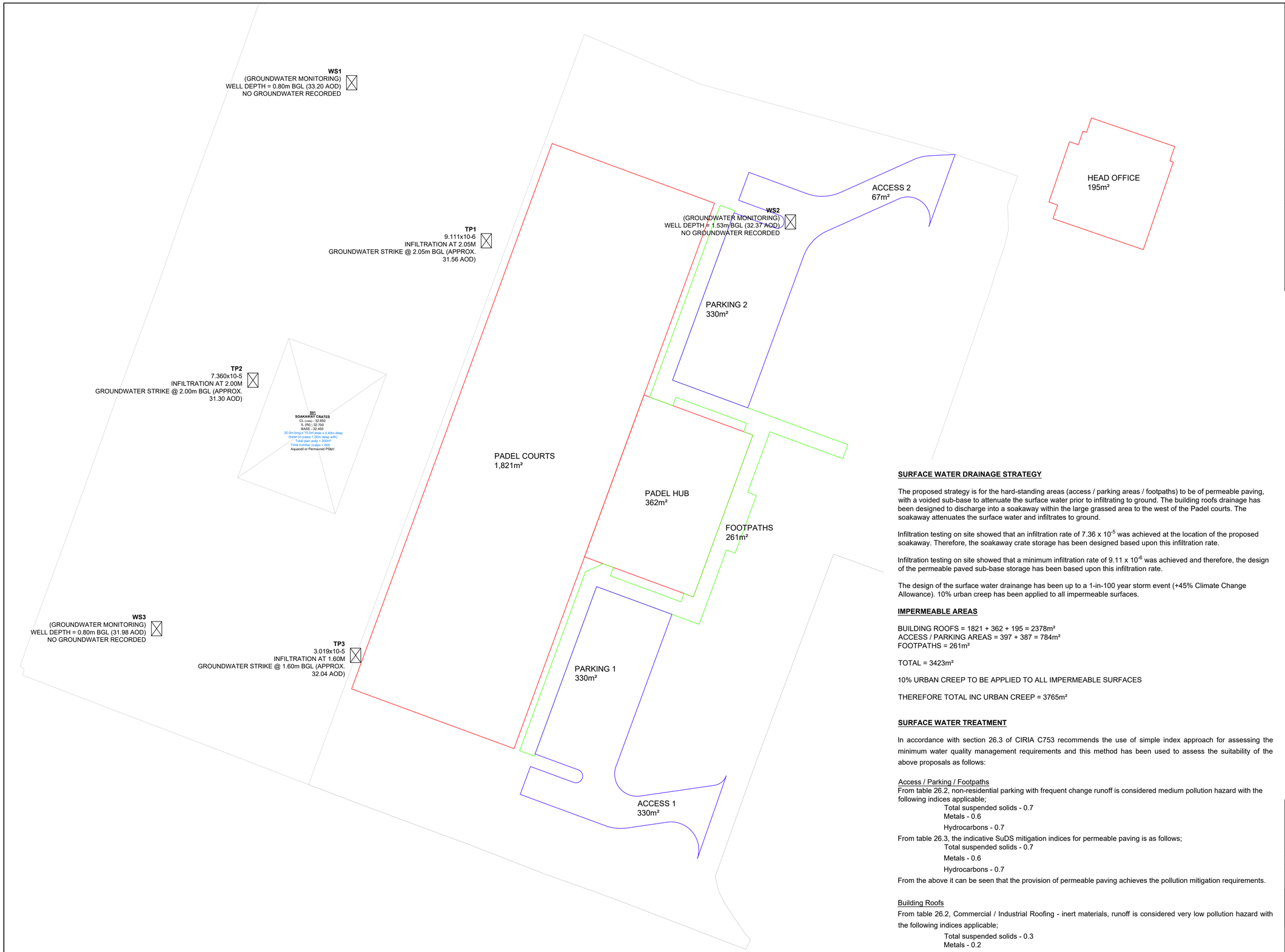

CATCHMENT AREAS AND CALCULATION REFERENCES

1:250

DO NOT SCALE THIS DRAWING

SURFACE WATER DRAINAGE STRATEGY

The proposed strategy is for the hard-standing areas (access / parking areas / footpaths) to be of permeable paving, with a voided sub-base to attenuate the surface water prior to infiltrating to ground. The building roofs drainage has been designed to discharge into a soakaway within the large grassed area to the west of the Padel courts. The soakaway attenuates the surface water and infiltrates to ground.

Infiltration testing on site showed that an infiltration rate of 7.36 x 10^{-5} was achieved at the location of the proposed soakaway. Therefore, the soakaway crate storage has been designed based upon this infiltration rate.

Infiltration testing on site showed that a minimum infiltration rate of 9.11 x 10^{-6} was achieved and therefore, the design of the permeable paved sub-base storage has been based upon this infiltration rate.

The design of the surface water drainage has been up to a 1-in-100 year storm event (+45% Climate Change Allowance). 10% urban creep has been applied to all impermeable surfaces.

IMPERMEABLE AREAS

BUILDING ROOFS = 1821 + 362 + 195 = 2378m²
ACCESS / PARKING AREAS = 397 + 387 = 784m²
FOOTPATHS = 261m²

TOTAL = 3423m²

10% URBAN CREEP TO BE APPLIED TO ALL IMPERMEABLE SURFACES

THEREFORE TOTAL INC URBAN CREEP = 3765m²

SURFACE WATER TREATMENT

In accordance with section 26.3 of CIRIA C753 recommends the use of simple index approach for assessing the minimum water quality management requirements and this method has been used to assess the suitability of the above proposals as follows:

Access / Parking / Footpaths
From table 26.2, non-residential parking with frequent change runoff is considered medium pollution hazard with the following indices applicable;

Total suspended solids - 0.7
Metals - 0.6
Hydrocarbons - 0.7

From table 26.3, the indicative SuDS mitigation indices for permeable paving is as follows;

Total suspended solids - 0.7
Metals - 0.6
Hydrocarbons - 0.7

From the above it can be seen that the provision of permeable paving achieves the pollution mitigation requirements.

Building Roofs
From table 26.2, Commercial / Industrial Roofing - inert materials, runoff is considered very low pollution hazard with the following indices applicable;

Total suspended solids - 0.3
Metals - 0.2
Hydrocarbons - 0.05

(ii) From table 26.3, the indicative SuDS mitigation indices for 300mm min. depth of soils with good contamination attenuation potential, is as follows;

Total suspended solids - 0.4
Metals - 0.3
Hydrocarbons - 0.3

From the above it can be seen that the provision of soil surrounding soakaway crates achieves the pollution mitigation requirements.

! CDM 2015 - RESIDUAL RISKS !

In preparing the designs illustrated by this drawing we have fulfilled our duties in the role of Designer as defined in the Construction Design and Management Regulations 2015. We have undertaken a full Hazard Identification and Risk Analysis and have designed out any special risks associated with the work, so that as far as possible there are no residual risks.

NOTE: Residual risks are defined as those risks arising from identified hazards which cannot be designed-out, and which a competent and experienced building contractor is unlikely to encounter during normal construction activities. Ordinary risks arising from normal construction operations have not been included.

Where hazards have been identified, the risks from which it has not been possible to eliminate during the design process, these are indicated on the drawing. It will be the responsibility of the Principal Contractor to develop Safe Systems of Work and/or Method Statements to minimise any risks associated with such hazards.

NOTE: It is incumbent on the subcontractors and installers to making themselves familiar with the current industry standards relating to their works as well as reviewing and installing such works in accordance with the current Building Regulations, British Standards, NHBC Standards, Standards Compliance Guides, Industry Association Standards and the product data sheets such as BBA certification and manufacturer's instructions.

NOTES

Date	By	Revision	QA'D	Chk'd	Ref

Status: INFORMATION

Cowan Consultancy
STRUCTURAL, CIVIL AND BUILDING CONSULTANTS
3 Turnberry House
4400 Parkway
Whiteley
Fareham
Hampshire
PO15 7FJ

Also at:
Landguard Manor
Landguard Manor Road
Shanklin
Isle of Wight
PO37 7JB

Tel: 01489 577488
Fax: 01489 579873
consultants@cowanconsult.co.uk
www.cowanconsult.co.uk

Client: SHOLING FC

Project: Sholing FC, Portsmouth Road
Sholing, Southampton, Hampshire, SO19 9PW

Title: CATCHMENT AREAS & CALCULATION REFERENCES

Date	Scale	Drg. No.
Apr 2026	As Shown @ A1	424686-200
Drawn: TB	Chk'd: EG	QA'D

Cowan Consultancy
STRUCTURAL, CIVIL AND BUILDING CONSULTANTS

SOAKAWAY 01 CALCULATIONS

Design Settings

Rainfall Methodology	FEH-22	Maximum Time of Concentration (mins)	30.00	Preferred Cover Depth (m)	0.300
Return Period (years)	2	Maximum Rainfall (mm/hr)	50.0	Include Intermediate Ground	✓
Additional Flow (%)	10	Minimum Velocity (m/s)	1.00	Enforce best practice design rules	✓
CV	1.000	Connection Type	Level Soffits		
Time of Entry (mins)	5.00	Minimum Backdrop Height (m)	0.200		

Nodes

	Name	Area (ha)	T of E (mins)	Cover Level (m)	Node Type	Manhole Type	Diameter (mm)	Sump (m)	Easting (m)	Northing (m)	Depth (m)
✓	SW-IC 06	0.027	5.00	33.650	Manhole	Adoptable	600	0.300	8.595	0.126	1.055
✓	SW-IC 10	0.040	5.00	33.650	Manhole	Adoptable	600	0.300	6.621	-5.407	1.055
✓	SW-IC 11			33.550	Manhole	Adoptable	1050	0.300	3.800	-1.400	0.990
✓	Soakaway S01			33.450	Junction				0.000	0.000	0.750
✓	SW-IC 05	0.007	5.00	33.850	Manhole	Adoptable	450		20.164	31.364	0.730
✓	SW-IC 03	0.007	5.00	33.850	Manhole	Adoptable	600		46.021	22.975	0.600
✓	SW-IC 04	0.061	5.00	33.850	Manhole	Adoptable	600		37.655	0.100	0.760
✓	SW-IC 09	0.007	5.00	33.850	Manhole	Adoptable	450		-4.949	-36.928	0.730
✓	SW-IC 07	0.007	5.00	33.850	Manhole	Adoptable	450		20.222	-47.302	0.600
✓	SW-IC 08	0.061	5.00	33.850	Manhole	Adoptable	600		28.627	-24.448	0.760
✓	SW-IC 02	0.005	5.00	34.650	Manhole	Adoptable	450		87.611	22.975	0.720
✓	SW-IC 01	0.005	5.00	35.000	Manhole	Adoptable	450		103.411	17.533	0.860
✓	R/E 2	0.005	5.00	35.000	Junction				91.163	34.657	0.700
✓	R/E 1	0.005	5.00	35.000	Junction				107.421	29.217	0.700

Flow+ v10.7 Copyright © 1988-2026 Causeway Technologies Ltd

Links

	Name	US Node	DS Node	Length (m)	ks (mm) / n	Velocity Equation	US IL (m)	DS IL (m)	Fall (m)	Slope (1:X)	Dia (mm)	Link Type	T of C (mins)	Rain (mm/hr)
✓	1.005	SW-IC 06	SW-IC 11	5.032	0.600	Colebrook-White	32.895	32.860	0.035	143.8	300	Circular	7.04	48.9
✓	4.002	SW-IC 10	SW-IC 11	4.900	0.600	Colebrook-White	32.895	32.860	0.035	140.0	300	Circular	6.02	50.0
?	1.006	SW-IC 11	Soakaway S01	4.050	0.600	Colebrook-White	32.860	32.700	0.160	25.3	300	Circular	7.06	48.8
?	3.000	SW-IC 05	SW-IC 06	33.311	0.600	Colebrook-White	33.120	32.895	0.225	148.1	150	Circular	5.67	50.0
?	5.000	SW-IC 09	SW-IC 10	33.577	0.600	Colebrook-White	33.120	32.895	0.225	149.2	150	Circular	5.68	50.0
?	4.000	SW-IC 07	SW-IC 08	24.351	0.600	Colebrook-White	33.250	33.090	0.160	152.2	150	Circular	5.50	50.0
✓	4.001	SW-IC 08	SW-IC 10	29.100	0.600	Colebrook-White	33.090	32.895	0.195	149.2	225	Circular	5.95	50.0
?	1.003	SW-IC 03	SW-IC 04	24.357	0.600	Colebrook-White	33.250	33.090	0.160	152.2	150	Circular	6.60	50.0
✓	1.004	SW-IC 04	SW-IC 06	29.060	0.600	Colebrook-White	33.090	32.895	0.195	149.0	300	Circular	6.97	49.1
?	1.001	SW-IC 01	SW-IC 02	16.711	0.600	Colebrook-White	34.140	33.930	0.210	79.6	100	Circular	5.56	50.0
✓	1.002	SW-IC 02	SW-IC 03	41.590	0.600	Colebrook-White	33.930	33.250	0.680	61.2	150	Circular	6.10	50.0
?	2.000	R/E 2	SW-IC 02	12.210	0.600	Colebrook-White	34.300	33.930	0.370	33.0	100	Circular	5.15	50.0
?	1.000	R/E 1	SW-IC 01	12.353	0.600	Colebrook-White	34.300	34.140	0.160	77.2	100	Circular	5.23	50.0

	Name	US Node	DS Node	Vel (m/s)	Cap (l/s)	Flow (l/s)	US Depth (m)	DS Depth (m)	Minimum Depth (m)	Maximum Depth (m)	Σ Area (ha)	Σ Add Inflow (l/s)	Pro Depth (mm)	Pro Velocity (m/s)
✓	1.005	SW-IC 06	SW-IC 11	1.309	92.5	23.7	0.455	0.390	0.390	0.455	0.122	0.0	103	1.102
✓	4.002	SW-IC 10	SW-IC 11	1.327	93.8	22.9	0.455	0.390	0.390	0.455	0.115	0.0	100	1.100
?	1.006	SW-IC 11	Soakaway S01	3.137	221.8	46.0	0.390	0.450	0.390	0.450	0.237	0.0	92	2.493
?	3.000	SW-IC 05	SW-IC 06	0.823	14.6	1.4	0.580	0.605	0.580	0.605	0.007	0.0	31	0.520
?	5.000	SW-IC 09	SW-IC 10	0.820	14.5	1.4	0.580	0.605	0.580	0.605	0.007	0.0	31	0.518
?	4.000	SW-IC 07	SW-IC 08	0.812	14.3	1.4	0.450	0.610	0.450	0.610	0.007	0.0	31	0.513
✓	4.001	SW-IC 08	SW-IC 10	1.068	42.5	13.5	0.535	0.530	0.530	0.535	0.068	0.0	87	0.953
?	1.003	SW-IC 03	SW-IC 04	0.812	14.3	5.4	0.450	0.610	0.450	0.610	0.027	0.0	64	0.754
✓	1.004	SW-IC 04	SW-IC 06	1.285	90.9	17.2	0.460	0.455	0.455	0.460	0.088	0.0	88	0.996
?	1.001	SW-IC 01	SW-IC 02	0.863	6.8	2.0	0.760	0.620	0.620	0.760	0.010	0.0	37	0.750
✓	1.002	SW-IC 02	SW-IC 03	1.288	22.8	4.0	0.570	0.450	0.450	0.570	0.020	0.0	42	0.972
?	2.000	R/E 2	SW-IC 02	1.347	10.6	1.0	0.600	0.620	0.600	0.620	0.005	0.0	21	0.842
?	1.000	R/E 1	SW-IC 01	0.877	6.9	1.0	0.600	0.760	0.600	0.760	0.005	0.0	25	0.617

Flow+ v10.7 Copyright © 1988-2026 Causeway Technologies Ltd

Simulation Settings

Rainfall Methodology	FEH-22	Skip Steady State	✓	2 year (l/s)	1.1	Check Discharge Volume	✓
Summer CV	1.000	Drain Down Time (mins)	240	10 year (l/s)	2.1	100 year 360 minute (m³)	66
Winter CV	1.000	Additional Storage (m³/ha)	0.0	30 year (l/s)	3.1		
Analysis Speed	Detailed	Check Discharge Rate(s)	✓	100 year (l/s)	4.2		

Storm Durations

15	30	60	120	180	240	360	480	600	720	960	1440

Return Period (years)	Climate Change (CC %)	Additional Area (A %)	Additional Flow (Q %)	Return Period (years)	Climate Change (CC %)	Additional Area (A %)	Additional Flow (Q %)
2	10	10	0	30	40	10	0
10	40	10	0	100	45	10	0

Pre-development Discharge Rate

Site Makeup	Greenfield	SPR	0.47	Growth Factor 100 year	3.19	Q 30 year (l/s)	3.1
Greenfield Method	IH124	Region	7	Betterment (%)	0	Q 100 year (l/s)	4.2
Positively Drained Area (ha)	0.238	Growth Factor 2 year	0.88	QBar	1.3		
SAAR (mm)	780	Growth Factor 10 year	1.62	Q 2 year (l/s)	1.1		
Soil Index	4	Growth Factor 30 year	2.40	Q 10 year (l/s)	2.1		

Pre-development Discharge Volume

Site Makeup	Greenfield	Soil Index	4	Return Period (years)	100	Betterment (%)	0
Greenfield Method	FSR/FEH	SPR	0.47	Climate Change (%)	0	PR	0.486
Positively Drained Area (ha)	0.238	CWI	118.222	Storm Duration (mins)	360	Runoff Volume (m³)	66

Node Soakaway S01 Soakaway Storage Structure

Base Inf Coefficient (m/hr)	0.26496	Porosity	0.95	Pit Width (m)	20.000	Inf Depth (m)	0.400
Side Inf Coefficient (m/hr)	0.26496	Invert Level (m)	32.450	Pit Length (m)	14.500	Number Required	1
Safety Factor	2.0	Time to half empty (mins)	82	Depth (m)	0.400		

Flow+ v10.7 Copyright © 1988-2026 Causeway Technologies Ltd

Approval Settings

Node Size	x	Backdrops	✓	Maximum Surcharged Depth (m)	0.100
Node Losses	✓	Minimum Backdrop Height (m)	0.200	Flooding	✓
Link Size	✓	Maximum Backdrop Height (m)	1.500	Return Period (years)	100
Minimum Diameter (mm)	100	Full Bore Velocity	✓	Time to Half Empty	✓
Link Length	✓	Minimum Full Bore Velocity (m/s)	1.000	Return Period (years)	2
Maximum Length (m)	100.000	Maximum Full Bore Velocity (m/s)	3.000	Discharge Rates	✓
Coordinates	✓	Proportional Velocity	✓	2 year (l/s)	1.1
Accuracy (m)	1.000	Return Period (years)	2	10 year (l/s)	2.1
Crossings	✓	Minimum Proportional Velocity (m/s)	0.750	30 year (l/s)	3.1
Cover Depth	✓	Maximum Proportional Velocity (m/s)	3.000	100 year (l/s)	4.2
Minimum Cover Depth (m)	0.300	Surcharged Depth	✓	Discharge Volume	✓
Maximum Cover Depth (m)	3.000	Return Period (years)	2	100 year +45% 360 minute (m^3)	2

Approval Results

The network has been designed using IDF rainfall
It contains 14 nodes (0 outfalls) and 13 links
The total impermeable area is 0.237 ha
1 structure has been defined, providing 110m^3 of storage below the flood risk level
Infiltration based on BRE 365 has been applied at 1 of the structures
Simulations have been completed using FEH-22 summer and winter storms from 15 to 1440 minute duration

The node size test has not been completed

5 connections have combined exit and entry losses less than the recomended total

Node	US Link	DS Link	US Exit Loss	DS Entry Loss	Angle (degrees)	Recommended Node Losses
SW-IC 03	1.002	1.003	0.250	0.250	70	0.900
SW-IC 04	1.003	1.004	0.250	0.250	70	0.900
SW-IC 08	4.000	4.001	0.250	0.250	69	0.900
SW-IC 02	2.000	1.002	0.250	0.250	73	0.900
SW-IC 01	1.000	1.001	0.250	0.250	90	1.200

No circular links have diameters < 100mm

Flow+ v10.7 Copyright © 1988-2026 Causeway Technologies Ltd

No links have lengths > 100.000m

No links have lengths that differ from their coordinated length by more than 1.000m

No links cross one or more other links

No links have cover depth outside the range 0.300-3.000m

No nodes have backdrops outside the range 0.200-1.500m

7 links have full bore velocity outside the range 1.000-3.000m/s

US Node	DS Node	Link	Velocity (m/s)
SW-IC 11	Soakaway S01	1.006	3.137
SW-IC 05	SW-IC 06	3.000	0.823
SW-IC 09	SW-IC 10	5.000	0.820
SW-IC 07	SW-IC 08	4.000	0.812
SW-IC 03	SW-IC 04	1.003	0.812
SW-IC 01	SW-IC 02	1.001	0.863
R/E 1	SW-IC 01	1.000	0.877

7 links have peak proportional velocity outside the range 0.750-3.000m/s during the 2 year return period

US Node	DS Node	Link	Velocity (m/s)	Event
SW-IC 05	SW-IC 06	3.000	0.166	2 year +10% CC +10% A 15 minute summer
SW-IC 09	SW-IC 10	5.000	0.168	2 year +10% CC +10% A 15 minute summer
SW-IC 07	SW-IC 08	4.000	0.223	2 year +10% CC +10% A 15 minute summer
SW-IC 03	SW-IC 04	1.003	0.625	2 year +10% CC +10% A 15 minute summer
SW-IC 01	SW-IC 02	1.001	0.711	2 year +10% CC +10% A 15 minute summer
R/E 2	SW-IC 02	2.000	0.517	2 year +10% CC +10% A 15 minute summer
R/E 1	SW-IC 01	1.000	0.486	2 year +10% CC +10% A 15 minute summer

No links have a surcharged depth greater than 0.100m during the 2 year return period

No nodes flood during the 100 year return period

Flow+ v10.7 Copyright © 1988-2026 Causeway Technologies Ltd

No infiltrating structures failed to half empty in 1440 minutes during the 2 year return period

No outfalls have a discharge rate greater than 1.1l/s during the 2 year return period

No outfalls have a discharge rate greater than 2.1l/s during the 10 year return period

No outfalls have a discharge rate greater than 3.1l/s during the 30 year return period

No outfalls have a discharge rate greater than 4.2l/s during the 100 year return period

No outfalls have a discharge volume greater than 2m³ during the 100 year 360 minute storm

Rainfall

Event	Peak Intensity (mm/hr)	Average Intensity (mm/hr)	Event	Peak Intensity (mm/hr)	Average Intensity (mm/hr)
2 year +10% CC +10% A 15 minute summer	125.952	35.640	2 year +10% CC +10% A 960 minute summer	8.798	2.317
2 year +10% CC +10% A 15 minute winter	88.387	35.640	2 year +10% CC +10% A 960 minute winter	5.828	2.317
2 year +10% CC +10% A 30 minute summer	81.835	23.156	2 year +10% CC +10% A 1440 minute summer	6.541	1.753
2 year +10% CC +10% A 30 minute winter	57.428	23.156	2 year +10% CC +10% A 1440 minute winter	4.396	1.753
2 year +10% CC +10% A 60 minute summer	55.467	14.658	10 year +40% CC +10% A 15 minute summer	294.415	83.309
2 year +10% CC +10% A 60 minute winter	36.851	14.658	10 year +40% CC +10% A 15 minute winter	206.607	83.309
2 year +10% CC +10% A 120 minute summer	36.319	9.598	10 year +40% CC +10% A 30 minute summer	192.726	54.535
2 year +10% CC +10% A 120 minute winter	24.130	9.598	10 year +40% CC +10% A 30 minute winter	135.246	54.535
2 year +10% CC +10% A 180 minute summer	28.589	7.357	10 year +40% CC +10% A 60 minute summer	130.197	34.407
2 year +10% CC +10% A 180 minute winter	18.584	7.357	10 year +40% CC +10% A 60 minute winter	86.500	34.407
2 year +10% CC +10% A 240 minute summer	22.921	6.057	10 year +40% CC +10% A 120 minute summer	77.745	20.546
2 year +10% CC +10% A 240 minute winter	15.228	6.057	10 year +40% CC +10% A 120 minute winter	51.652	20.546
2 year +10% CC +10% A 360 minute summer	17.793	4.579	10 year +40% CC +10% A 180 minute summer	58.714	15.109
2 year +10% CC +10% A 360 minute winter	11.566	4.579	10 year +40% CC +10% A 180 minute winter	38.166	15.109
2 year +10% CC +10% A 480 minute summer	14.188	3.749	10 year +40% CC +10% A 240 minute summer	45.892	12.128
2 year +10% CC +10% A 480 minute winter	9.426	3.749	10 year +40% CC +10% A 240 minute winter	30.489	12.128
2 year +10% CC +10% A 600 minute summer	11.737	3.210	10 year +40% CC +10% A 360 minute summer	34.524	8.884
2 year +10% CC +10% A 600 minute winter	8.019	3.210	10 year +40% CC +10% A 360 minute winter	22.442	8.884
2 year +10% CC +10% A 720 minute summer	10.552	2.828	10 year +40% CC +10% A 480 minute summer	26.964	7.126
2 year +10% CC +10% A 720 minute winter	7.091	2.828	10 year +40% CC +10% A 480 minute winter	17.914	7.126

Flow+ v10.7 Copyright © 1988-2026 Causeway Technologies Ltd

Rainfall

Event	Peak Intensity (mm/hr)	Average Intensity (mm/hr)	Event	Peak Intensity (mm/hr)	Average Intensity (mm/hr)
10 year +40% CC +10% A 600 minute summer	21.976	6.011	30 year +40% CC +10% A 960 minute summer	19.266	5.073
10 year +40% CC +10% A 600 minute winter	15.015	6.011	30 year +40% CC +10% A 960 minute winter	12.762	5.073
10 year +40% CC +10% A 720 minute summer	19.534	5.235	30 year +40% CC +10% A 1440 minute summer	13.935	3.735
10 year +40% CC +10% A 720 minute winter	13.128	5.235	30 year +40% CC +10% A 1440 minute winter	9.365	3.735
10 year +40% CC +10% A 960 minute summer	16.035	4.223	100 year +45% CC +10% A 15 minute summer	490.408	138.769
10 year +40% CC +10% A 960 minute winter	10.622	4.223	100 year +45% CC +10% A 15 minute winter	344.146	138.769
10 year +40% CC +10% A 1440 minute summer	11.683	3.131	100 year +45% CC +10% A 30 minute summer	327.193	92.584
10 year +40% CC +10% A 1440 minute winter	7.851	3.131	100 year +45% CC +10% A 30 minute winter	229.609	92.584
30 year +40% CC +10% A 15 minute summer	379.044	107.256	100 year +45% CC +10% A 60 minute summer	223.320	59.017
30 year +40% CC +10% A 15 minute winter	265.996	107.256	100 year +45% CC +10% A 60 minute winter	148.368	59.017
30 year +40% CC +10% A 30 minute summer	250.829	70.976	100 year +45% CC +10% A 120 minute summer	127.093	33.587
30 year +40% CC +10% A 30 minute winter	176.021	70.976	100 year +45% CC +10% A 120 minute winter	84.437	33.587
30 year +40% CC +10% A 60 minute summer	170.046	44.938	100 year +45% CC +10% A 180 minute summer	93.886	24.160
30 year +40% CC +10% A 60 minute winter	112.975	44.938	100 year +45% CC +10% A 180 minute winter	61.028	24.160
30 year +40% CC +10% A 120 minute summer	98.567	26.048	100 year +45% CC +10% A 240 minute summer	72.427	19.140
30 year +40% CC +10% A 120 minute winter	65.486	26.048	100 year +45% CC +10% A 240 minute winter	48.119	19.140
30 year +40% CC +10% A 180 minute summer	73.342	18.873	100 year +45% CC +10% A 360 minute summer	53.694	13.817
30 year +40% CC +10% A 180 minute winter	47.674	18.873	100 year +45% CC +10% A 360 minute winter	34.903	13.817
30 year +40% CC +10% A 240 minute summer	56.817	15.015	100 year +45% CC +10% A 480 minute summer	41.569	10.986
30 year +40% CC +10% A 240 minute winter	37.748	15.015	100 year +45% CC +10% A 480 minute winter	27.618	10.986
30 year +40% CC +10% A 360 minute summer	42.354	10.899	100 year +45% CC +10% A 600 minute summer	33.662	9.207
30 year +40% CC +10% A 360 minute winter	27.531	10.899	100 year +45% CC +10% A 600 minute winter	23.000	9.207
30 year +40% CC +10% A 480 minute summer	32.887	8.691	100 year +45% CC +10% A 720 minute summer	29.767	7.978
30 year +40% CC +10% A 480 minute winter	21.849	8.691	100 year +45% CC +10% A 720 minute winter	20.005	7.978
30 year +40% CC +10% A 600 minute summer	26.684	7.299	100 year +45% CC +10% A 960 minute summer	24.214	6.376
30 year +40% CC +10% A 600 minute winter	18.232	7.299	100 year +45% CC +10% A 960 minute winter	16.040	6.376
30 year +40% CC +10% A 720 minute summer	23.631	6.333	100 year +45% CC +10% A 1440 minute summer	17.442	4.675
30 year +40% CC +10% A 720 minute winter	15.881	6.333	100 year +45% CC +10% A 1440 minute winter	11.722	4.675

Flow+ v10.7 Copyright © 1988-2026 Causeway Technologies Ltd

Results for 2 year +10% CC +10% A Critical Storm Duration. Lowest mass balance: 99.25%

Node Event	US Node	Peak (mins)	Level (m)	Depth (m)	Inflow (l/s)	Node Vol (m³)	Flood (m³)	Status
15 minute summer	SW-IC 06	11	33.019	0.124	26.4	0.0351	0.0000	OK
15 minute summer	SW-IC 10	11	33.017	0.121	25.8	0.0344	0.0000	OK
15 minute summer	SW-IC 11	11	32.970	0.110	51.9	0.0956	0.0000	OK
60 minute summer	Soakaway S01	43	32.523	-0.177	35.5	20.0949	0.0000	OK
15 minute summer	SW-IC 05	11	33.153	0.033	1.6	0.0052	0.0000	OK
15 minute summer	SW-IC 03	11	33.316	0.066	5.9	0.0186	0.0000	OK
15 minute summer	SW-IC 04	11	33.183	0.093	19.0	0.0263	0.0000	OK
15 minute summer	SW-IC 09	11	33.153	0.033	1.6	0.0052	0.0000	OK
15 minute summer	SW-IC 07	10	33.283	0.033	1.6	0.0053	0.0000	OK
15 minute summer	SW-IC 08	10	33.183	0.093	15.3	0.0262	0.0000	OK
15 minute summer	SW-IC 02	11	33.975	0.045	4.4	0.0071	0.0000	OK
15 minute summer	SW-IC 01	11	34.179	0.039	2.2	0.0062	0.0000	OK
15 minute summer	R/E 2	11	34.322	0.022	1.1	0.0000	0.0000	OK
15 minute summer	R/E 1	11	34.327	0.027	1.1	0.0000	0.0000	OK

Link Event (Upstream Depth)	US Node	Link	DS Node	Outflow (l/s)	Velocity (m/s)	Flow/Cap	Link Vol (m³)
15 minute summer	SW-IC 06	1.005	SW-IC 11	26.5	1.040	0.287	0.1283
15 minute summer	SW-IC 10	4.002	SW-IC 11	25.3	1.017	0.270	0.1231
15 minute summer	SW-IC 11	1.006	Soakaway S01	51.9	2.390	0.234	0.0880
60 minute summer	Soakaway S01	Infiltration		10.9			
15 minute summer	SW-IC 05	3.000	SW-IC 06	1.5	0.166	0.105	0.3069
15 minute summer	SW-IC 03	1.003	SW-IC 04	5.7	0.625	0.401	0.2297
15 minute summer	SW-IC 04	1.004	SW-IC 06	19.1	0.831	0.210	0.6690
15 minute summer	SW-IC 09	5.000	SW-IC 10	1.5	0.168	0.106	0.3043
15 minute summer	SW-IC 07	4.000	SW-IC 08	1.5	0.223	0.107	0.1739
15 minute summer	SW-IC 08	4.001	SW-IC 10	15.1	0.819	0.357	0.5390
15 minute summer	SW-IC 02	1.002	SW-IC 03	4.4	0.759	0.192	0.2453
15 minute summer	SW-IC 01	1.001	SW-IC 02	2.2	0.711	0.325	0.0520
15 minute summer	R/E 2	2.000	SW-IC 02	1.1	0.517	0.104	0.0283
15 minute summer	R/E 1	1.000	SW-IC 01	1.1	0.486	0.160	0.0282

Flow+ v10.7 Copyright © 1988-2026 Causeway Technologies Ltd

Results for 10 year +40% CC +10% A Critical Storm Duration. Lowest mass balance: 99.25%

Node Event	US Node	Peak (mins)	Level (m)	Depth (m)	Inflow (l/s)	Node Vol (m³)	Flood (m³)	Status
15 minute summer	SW-IC 06	11	33.108	0.213	62.2	0.0604	0.0000	OK
15 minute summer	SW-IC 10	10	33.105	0.210	60.2	0.0594	0.0000	OK
15 minute summer	SW-IC 11	11	33.047	0.187	121.2	0.1616	0.0000	OK
60 minute summer	Soakaway S01	53	32.668	-0.032	84.1	60.1173	0.0000	OK
15 minute summer	SW-IC 05	10	33.171	0.051	3.7	0.0081	0.0000	OK
15 minute summer	SW-IC 03	11	33.370	0.120	13.7	0.0339	0.0000	OK
15 minute summer	SW-IC 04	10	33.241	0.151	44.8	0.0428	0.0000	OK
15 minute summer	SW-IC 09	10	33.171	0.051	3.7	0.0081	0.0000	OK
15 minute summer	SW-IC 07	10	33.301	0.051	3.7	0.0081	0.0000	OK
15 minute summer	SW-IC 08	10	33.254	0.164	35.9	0.0465	0.0000	OK
15 minute summer	SW-IC 02	11	34.000	0.070	10.3	0.0112	0.0000	OK
15 minute summer	SW-IC 01	10	34.207	0.067	5.2	0.0106	0.0000	OK
15 minute summer	R/E 2	10	34.334	0.034	2.6	0.0000	0.0000	OK
15 minute summer	R/E 1	10	34.342	0.042	2.6	0.0000	0.0000	OK

Link Event (Upstream Depth)	US Node	Link	DS Node	Outflow (l/s)	Velocity (m/s)	Flow/Cap	Link Vol (m³)
15 minute summer	SW-IC 06	1.005	SW-IC 11	62.0	1.243	0.670	0.2508
15 minute summer	SW-IC 10	4.002	SW-IC 11	59.3	1.206	0.633	0.2418
15 minute summer	SW-IC 11	1.006	Soakaway S01	121.4	2.913	0.548	0.1687
60 minute summer	Soakaway S01	Infiltration		11.2			
15 minute summer	SW-IC 05	3.000	SW-IC 06	3.6	0.266	0.247	0.3803
15 minute summer	SW-IC 03	1.003	SW-IC 04	13.3	0.821	0.925	0.3979
15 minute summer	SW-IC 04	1.004	SW-IC 06	44.3	0.992	0.487	1.2909
15 minute summer	SW-IC 09	5.000	SW-IC 10	3.6	0.265	0.248	0.3836
15 minute summer	SW-IC 07	4.000	SW-IC 08	3.6	0.268	0.253	0.2790
15 minute summer	SW-IC 08	4.001	SW-IC 10	35.4	1.002	0.833	1.0134
15 minute summer	SW-IC 02	1.002	SW-IC 03	10.2	0.924	0.447	0.4817
15 minute summer	SW-IC 01	1.001	SW-IC 02	5.1	0.893	0.751	0.0954
15 minute summer	R/E 2	2.000	SW-IC 02	2.6	0.644	0.244	0.0497
15 minute summer	R/E 1	1.000	SW-IC 01	2.6	0.589	0.374	0.0539

Flow+ v10.7 Copyright © 1988-2026 Causeway Technologies Ltd

Results for 30 year +40% CC +10% A Critical Storm Duration. Lowest mass balance: 99.25%

Node Event	US Node	Peak (mins)	Level (m)	Depth (m)	Inflow (l/s)	Node Vol (m³)	Flood (m³)	Status
15 minute summer	SW-IC 06	11	33.156	0.261	78.2	0.0738	0.0000	OK
15 minute summer	SW-IC 10	11	33.151	0.256	75.2	0.0723	0.0000	OK
15 minute summer	SW-IC 11	11	33.081	0.221	153.6	0.1917	0.0000	OK
60 minute winter	Soakaway S01	60	32.758	0.058	80.0	84.8310	0.0000	OK
15 minute summer	SW-IC 05	10	33.178	0.058	4.8	0.0093	0.0000	OK
15 minute summer	SW-IC 03	11	33.515	0.265	17.7	0.0750	0.0000	SURCHARGED
15 minute summer	SW-IC 04	11	33.266	0.176	56.0	0.0499	0.0000	OK
15 minute summer	SW-IC 09	10	33.178	0.058	4.8	0.0093	0.0000	OK
15 minute summer	SW-IC 07	11	33.429	0.179	4.9	0.0284	0.0000	SURCHARGED
15 minute summer	SW-IC 08	11	33.405	0.315	44.3	0.0893	0.0000	SURCHARGED
15 minute summer	SW-IC 02	11	34.012	0.082	13.3	0.0130	0.0000	OK
15 minute summer	SW-IC 01	11	34.224	0.084	6.8	0.0134	0.0000	OK
15 minute summer	R/E 2	10	34.339	0.039	3.4	0.0000	0.0000	OK
15 minute summer	R/E 1	10	34.349	0.049	3.4	0.0000	0.0000	OK

Link Event (Upstream Depth)	US Node	Link	DS Node	Outflow (l/s)	Velocity (m/s)	Flow/Cap	Link Vol (m³)
15 minute summer	SW-IC 06	1.005	SW-IC 11	78.2	1.291	0.846	0.3038
15 minute summer	SW-IC 10	4.002	SW-IC 11	75.4	1.255	0.804	0.2932
15 minute summer	SW-IC 11	1.006	Soakaway S01	153.7	3.053	0.693	0.2032
60 minute winter	Soakaway S01	Infiltration		11.5			
15 minute summer	SW-IC 05	3.000	SW-IC 06	4.7	0.333	0.321	0.3984
15 minute summer	SW-IC 03	1.003	SW-IC 04	17.0	0.965	1.184	0.4288
15 minute summer	SW-IC 04	1.004	SW-IC 06	56.1	1.021	0.618	1.5700
15 minute summer	SW-IC 09	5.000	SW-IC 10	4.7	0.332	0.322	0.4018
15 minute summer	SW-IC 07	4.000	SW-IC 08	6.4	0.374	0.447	0.4287
15 minute summer	SW-IC 08	4.001	SW-IC 10	44.6	1.121	1.050	1.1573
15 minute summer	SW-IC 02	1.002	SW-IC 03	13.1	0.957	0.578	0.5698
15 minute summer	SW-IC 01	1.001	SW-IC 02	6.6	0.948	0.972	0.1161
15 minute summer	R/E 2	2.000	SW-IC 02	3.4	0.692	0.318	0.0586
15 minute summer	R/E 1	1.000	SW-IC 01	3.4	0.614	0.487	0.0670

Flow+ v10.7 Copyright © 1988-2026 Causeway Technologies Ltd

Results for 100 year +45% CC +10% A Critical Storm Duration. Lowest mass balance: 99.25%

Node Event	US Node	Peak (mins)	Level (m)	Depth (m)	Inflow (l/s)	Node Vol (m³)	Flood (m³)	Status
60 minute winter	SW-IC 06	60	33.350	0.455	53.8	0.1287	0.0000	SURCHARGED
60 minute winter	SW-IC 10	60	33.350	0.455	50.9	0.1287	0.0000	SURCHARGED
60 minute winter	SW-IC 11	60	33.349	0.489	104.6	0.4239	0.0000	FLOOD RISK
60 minute winter	Soakaway S01	60	33.349	0.649	104.6	110.3378	0.0000	OK
60 minute winter	SW-IC 05	59	33.349	0.229	3.1	0.0364	0.0000	SURCHARGED
15 minute summer	SW-IC 03	12	33.717	0.467	22.0	0.1322	0.0000	FLOOD RISK
60 minute winter	SW-IC 04	60	33.351	0.261	38.8	0.0740	0.0000	OK
60 minute winter	SW-IC 09	60	33.351	0.231	3.1	0.0367	0.0000	SURCHARGED
15 minute summer	SW-IC 07	11	33.694	0.444	6.2	0.0705	0.0000	FLOOD RISK
15 minute summer	SW-IC 08	11	33.658	0.568	58.5	0.1607	0.0000	FLOOD RISK
15 minute summer	SW-IC 02	12	34.031	0.101	16.2	0.0161	0.0000	OK
15 minute summer	SW-IC 01	11	34.336	0.196	8.6	0.0312	0.0000	SURCHARGED
15 minute summer	R/E 2	10	34.345	0.045	4.4	0.0000	0.0000	OK
15 minute summer	R/E 1	12	34.378	0.078	4.4	0.0000	0.0000	OK

Link Event (Upstream Depth)	US Node	Link	DS Node	Outflow (l/s)	Velocity (m/s)	Flow/Cap	Link Vol (m³)
60 minute winter	SW-IC 06	1.005	SW-IC 11	53.8	1.215	0.581	0.3544
60 minute winter	SW-IC 10	4.002	SW-IC 11	50.9	1.162	0.543	0.3451
60 minute winter	SW-IC 11	1.006	Soakaway S01	104.6	2.818	0.472	0.2852
60 minute winter	Soakaway S01	Infiltration		11.7			
60 minute winter	SW-IC 05	3.000	SW-IC 06	3.1	0.233	0.213	0.5864
15 minute summer	SW-IC 03	1.003	SW-IC 04	21.1	1.198	1.470	0.4288
60 minute winter	SW-IC 04	1.004	SW-IC 06	38.8	0.975	0.427	1.9698
60 minute winter	SW-IC 09	5.000	SW-IC 10	3.1	0.233	0.214	0.5911
15 minute summer	SW-IC 07	4.000	SW-IC 08	8.6	0.498	0.596	0.4287
15 minute summer	SW-IC 08	4.001	SW-IC 10	57.8	1.453	1.361	1.1573
15 minute summer	SW-IC 02	1.002	SW-IC 03	15.8	0.984	0.696	0.6295
15 minute summer	SW-IC 01	1.001	SW-IC 02	7.7	0.980	1.131	0.1308
15 minute summer	R/E 2	2.000	SW-IC 02	4.4	0.762	0.413	0.0680
15 minute summer	R/E 1	1.000	SW-IC 01	4.2	0.635	0.610	0.0886

Flow+ v10.7 Copyright © 1988-2026 Causeway Technologies Ltd

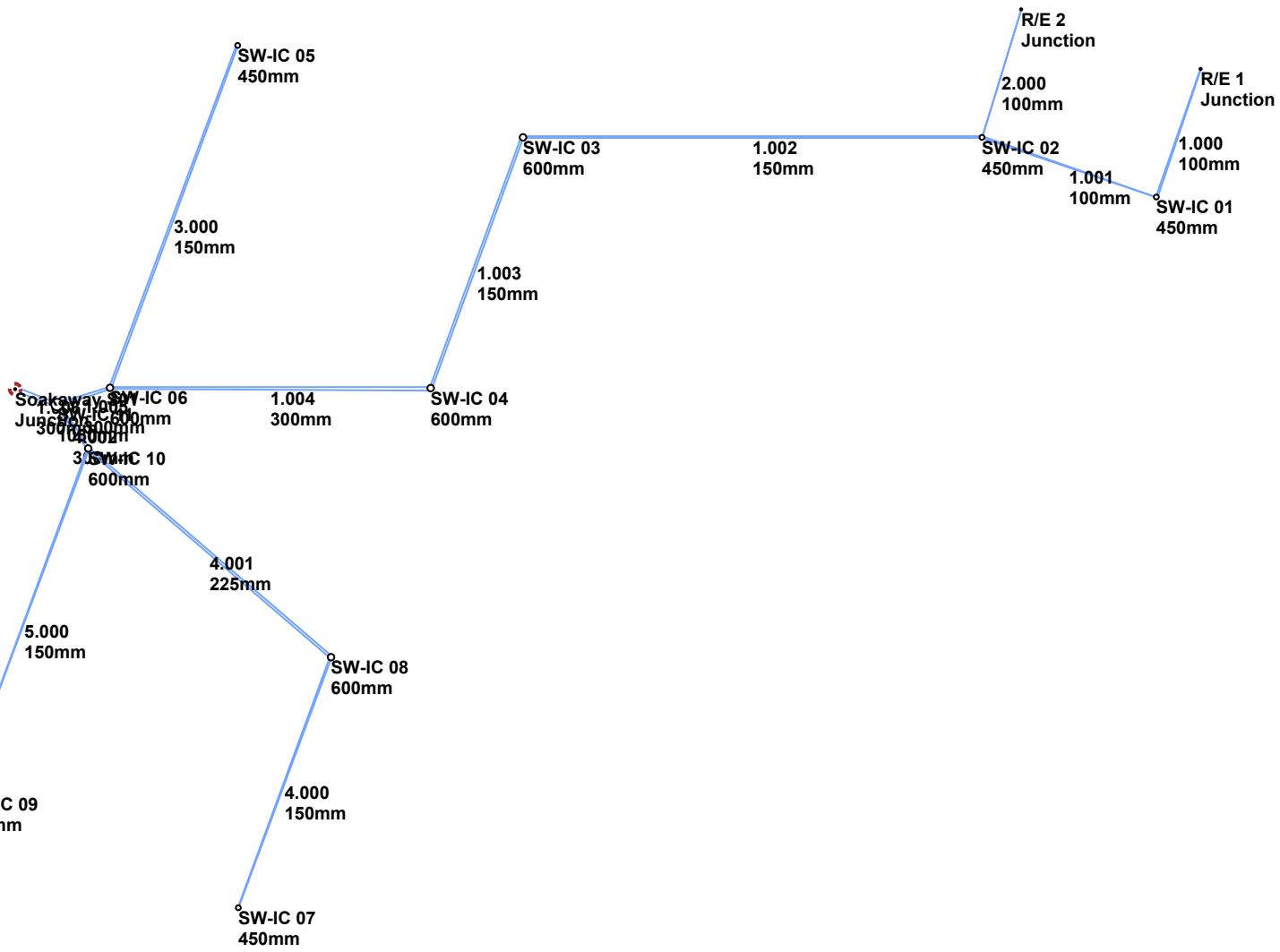
R/E 2
Junction
2.000
100mm
R/E 1
Junction
SW-IC 05
450mm
SW-IC 03
600mm
1.002
150mm
SW-IC 02
450mm
1.000
100mm
1.001
100mm
SW-IC 01
450mm
3.000
150mm
1.003
150mm
SW-IC 06
1.004
300mm
SW-IC 04
600mm
SW-IC 10
600mm
4.001
225mm
5.000
150mm
SW-IC 08
600mm
SW-IC 09
450mm
4.000
150mm
SW-IC 07
450mm

Cowan Consultancy
STRUCTURAL, CIVIL AND BUILDING CONSULTANTS

ACCESS / DRIVEWAY CALCULATIONS

Design Settings

Rainfall Methodology	FEH-22	Maximum Time of Concentration (mins)	30.00	Preferred Cover Depth (m)	0.300
Return Period (years)	2	Maximum Rainfall (mm/hr)	50.0	Include Intermediate Ground	✓
Additional Flow (%)	10	Minimum Velocity (m/s)	1.00	Enforce best practice design rules	✓
CV	1.000	Connection Type	Level Soffits		
Time of Entry (mins)	5.00	Minimum Backdrop Height (m)	0.200		

Nodes

Name	Area (ha)	Cover Level (m)	Node Type	Easting (m)	Northing (m)	Depth (m)
Parking 1	0.046	33.850	Junction	0.000	0.066	0.510
Parking 2	0.045	33.850	Junction	0.046	6.963	0.510
Access 2	0.007	34.150	Junction	2.589	8.724	0.610
Access 1	0.007	34.150	Junction	2.753	-1.285	0.610

Simulation Settings

Rainfall Methodology	FEH-22	Skip Steady State	✓	2 year (l/s)	0.5	Check Discharge Volume	✓
Summer CV	1.000	Drain Down Time (mins)	240	10 year (l/s)	0.9	100 year 360 minute (m^3)	95
Winter CV	1.000	Additional Storage (m^3/ha)	0.0	30 year (l/s)	1.4		
Analysis Speed	Detailed	Check Discharge Rate(s)	✓	100 year (l/s)	1.8		

Storm Durations

15	30	60	120	180	240	360	480	600	720	960	1440

Return Period (years)	Climate Change (CC %)	Additional Area (A %)	Additional Flow (Q %)	Return Period (years)	Climate Change (CC %)	Additional Area (A %)	Additional Flow (Q %)
2	10	10	0	30	40	10	0
10	40	10	0	100	45	10	0

Flow+ v10.7 Copyright © 1988-2026 Causeway Technologies Ltd

Pre-development Discharge Rate

Site Makeup	Greenfield	SPR	0.47	Growth Factor 100 year	3.19	Q 30 year (l/s)	1.4
Greenfield Method	IH124	Region	7	Betterment (%)	0	Q 100 year (l/s)	1.8
Positively Drained Area (ha)	0.105	Growth Factor 2 year	0.88	QBar	0.6		
SAAR (mm)	780	Growth Factor 10 year	1.62	Q 2 year (l/s)	0.5		
Soil Index	4	Growth Factor 30 year	2.40	Q 10 year (l/s)	0.9		

Pre-development Discharge Volume

Site Makeup	Greenfield	Soil Index	4	Return Period (years)	100	Betterment (%)	0
Greenfield Method	FSR/FEH	SPR	0.47	Climate Change (%)	0	PR	0.486
Positively Drained Area (ha)	0.105	CWI	118.222	Storm Duration (mins)	360	Runoff Volume (m³)	29

Node Parking 1 Carpark Storage Structure

Base Inf Coefficient (m/hr)	0.03280	Porosity	0.30	Width (m)	21.470	Depth (m)	0.300
Side Inf Coefficient (m/hr)	0.03280	Invert Level (m)	33.340	Length (m)	21.470	Inf Depth (m)	0.300
Safety Factor	2.0	Time to half empty (mins)	107	Slope (1:X)	250.0		

Node Parking 2 Carpark Storage Structure

Base Inf Coefficient (m/hr)	0.03280	Porosity	0.30	Width (m)	21.470	Depth (m)	0.300
Side Inf Coefficient (m/hr)	0.03280	Invert Level (m)	33.340	Length (m)	21.470	Inf Depth (m)	0.300
Safety Factor	2.0	Time to half empty (mins)	107	Slope (1:X)	250.0		

Node Access 2 Carpark Storage Structure

Base Inf Coefficient (m/hr)	0.03280	Porosity	1.00	Width (m)	10.000	Depth (m)	0.300
Side Inf Coefficient (m/hr)	0.03280	Invert Level (m)	33.540	Length (m)	6.000	Inf Depth (m)	0.300
Safety Factor	2.0	Time to half empty (mins)	462	Slope (1:X)	40.0		

Node Access 1 Carpark Storage Structure

Base Inf Coefficient (m/hr)	0.03280	Porosity	1.00	Width (m)	6.000	Depth (m)	0.300
Side Inf Coefficient (m/hr)	0.03280	Invert Level (m)	33.540	Length (m)	10.000	Inf Depth (m)	0.300
Safety Factor	2.0	Time to half empty (mins)	518	Slope (1:X)	40.0		

Flow+ v10.7 Copyright © 1988-2026 Causeway Technologies Ltd

Approval Settings

Node Size	x	Backdrops	✓	Maximum Surcharged Depth (m)	0.100
Node Losses	✓	Minimum Backdrop Height (m)	0.200	Flooding	✓
Link Size	✓	Maximum Backdrop Height (m)	1.500	Return Period (years)	100
Minimum Diameter (mm)	100	Full Bore Velocity	✓	Time to Half Empty	✓
Link Length	✓	Minimum Full Bore Velocity (m/s)	1.000	Return Period (years)	2
Maximum Length (m)	100.000	Maximum Full Bore Velocity (m/s)	3.000	Discharge Rates	✓
Coordinates	✓	Proportional Velocity	✓	2 year (l/s)	0.5
Accuracy (m)	1.000	Return Period (years)	2	10 year (l/s)	0.9
Crossings	✓	Minimum Proportional Velocity (m/s)	0.750	30 year (l/s)	1.4
Cover Depth	✓	Maximum Proportional Velocity (m/s)	3.000	100 year (l/s)	1.8
Minimum Cover Depth (m)	0.300	Surcharged Depth	✓	Discharge Volume	✓
Maximum Cover Depth (m)	3.000	Return Period (years)	2	100 year +45% 360 minute (m^3)	2

Approval Results

The network has been designed using IDF rainfall
It contains 4 nodes (0 outfalls) and 0 links
The total impermeable area is 0.105 ha
4 structures have been defined, providing 70m^3 of storage below the flood risk level
Infiltration based on BRE 365 has been applied at 4 of the structures
Simulations have been completed using FEH-22 summer and winter storms from 15 to 1440 minute duration

The node size test has not been completed

No connections have combined exit and entry losses less than the recomended total

No circular links have diameters < 100mm

No links have lengths > 100.000m

No links have lengths that differ from their coordinated length by more than 1.000m

No links cross one or more other links

No links have cover depth outside the range 0.300-3.000m

Flow+ v10.7 Copyright © 1988-2026 Causeway Technologies Ltd

No nodes have backdrops outside the range 0.200-1.500m

No links have full bore velocity outside the range 1.000-3.000m/s

No links have peak proportional velocity outside the range 0.750-3.000m/s during the 2 year return period

No links have a surcharged depth greater than 0.100m during the 2 year return period

No nodes flood during the 100 year return period

No infiltrating structures failed to half empty in 1440 minutes during the 2 year return period

No outfalls have a discharge rate greater than 0.5l/s during the 2 year return period

No outfalls have a discharge rate greater than 0.9l/s during the 10 year return period

No outfalls have a discharge rate greater than 1.4l/s during the 30 year return period

No outfalls have a discharge rate greater than 1.8l/s during the 100 year return period

No outfalls have a discharge volume greater than 2m³ during the 100 year 360 minute storm

Rainfall

Event	Peak Intensity (mm/hr)	Average Intensity (mm/hr)	Event	Peak Intensity (mm/hr)	Average Intensity (mm/hr)
2 year +10% CC +10% A 15 minute summer	125.952	35.640	2 year +10% CC +10% A 240 minute summer	22.921	6.057
2 year +10% CC +10% A 15 minute winter	88.387	35.640	2 year +10% CC +10% A 240 minute winter	15.228	6.057
2 year +10% CC +10% A 30 minute summer	81.835	23.156	2 year +10% CC +10% A 360 minute summer	17.793	4.579
2 year +10% CC +10% A 30 minute winter	57.428	23.156	2 year +10% CC +10% A 360 minute winter	11.566	4.579
2 year +10% CC +10% A 60 minute summer	55.467	14.658	2 year +10% CC +10% A 480 minute summer	14.188	3.749
2 year +10% CC +10% A 60 minute winter	36.851	14.658	2 year +10% CC +10% A 480 minute winter	9.426	3.749
2 year +10% CC +10% A 120 minute summer	36.319	9.598	2 year +10% CC +10% A 600 minute summer	11.737	3.210
2 year +10% CC +10% A 120 minute winter	24.130	9.598	2 year +10% CC +10% A 600 minute winter	8.019	3.210
2 year +10% CC +10% A 180 minute summer	28.589	7.357	2 year +10% CC +10% A 720 minute summer	10.552	2.828
2 year +10% CC +10% A 180 minute winter	18.584	7.357	2 year +10% CC +10% A 720 minute winter	7.091	2.828

Flow+ v10.7 Copyright © 1988-2026 Causeway Technologies Ltd

Rainfall

Event	Peak Intensity (mm/hr)	Average Intensity (mm/hr)	Event	Peak Intensity (mm/hr)	Average Intensity (mm/hr)
2 year +10% CC +10% A 960 minute summer	8.798	2.317	30 year +40% CC +10% A 60 minute summer	170.046	44.938
2 year +10% CC +10% A 960 minute winter	5.828	2.317	30 year +40% CC +10% A 60 minute winter	112.975	44.938
2 year +10% CC +10% A 1440 minute summer	6.541	1.753	30 year +40% CC +10% A 120 minute summer	98.567	26.048
2 year +10% CC +10% A 1440 minute winter	4.396	1.753	30 year +40% CC +10% A 120 minute winter	65.486	26.048
10 year +40% CC +10% A 15 minute summer	294.415	83.309	30 year +40% CC +10% A 180 minute summer	73.342	18.873
10 year +40% CC +10% A 15 minute winter	206.607	83.309	30 year +40% CC +10% A 180 minute winter	47.674	18.873
10 year +40% CC +10% A 30 minute summer	192.726	54.535	30 year +40% CC +10% A 240 minute summer	56.817	15.015
10 year +40% CC +10% A 30 minute winter	135.246	54.535	30 year +40% CC +10% A 240 minute winter	37.748	15.015
10 year +40% CC +10% A 60 minute summer	130.197	34.407	30 year +40% CC +10% A 360 minute summer	42.354	10.899
10 year +40% CC +10% A 60 minute winter	86.500	34.407	30 year +40% CC +10% A 360 minute winter	27.531	10.899
10 year +40% CC +10% A 120 minute summer	77.745	20.546	30 year +40% CC +10% A 480 minute summer	32.887	8.691
10 year +40% CC +10% A 120 minute winter	51.652	20.546	30 year +40% CC +10% A 480 minute winter	21.849	8.691
10 year +40% CC +10% A 180 minute summer	58.714	15.109	30 year +40% CC +10% A 600 minute summer	26.684	7.299
10 year +40% CC +10% A 180 minute winter	38.166	15.109	30 year +40% CC +10% A 600 minute winter	18.232	7.299
10 year +40% CC +10% A 240 minute summer	45.892	12.128	30 year +40% CC +10% A 720 minute summer	23.631	6.333
10 year +40% CC +10% A 240 minute winter	30.489	12.128	30 year +40% CC +10% A 720 minute winter	15.881	6.333
10 year +40% CC +10% A 360 minute summer	34.524	8.884	30 year +40% CC +10% A 960 minute summer	19.266	5.073
10 year +40% CC +10% A 360 minute winter	22.442	8.884	30 year +40% CC +10% A 960 minute winter	12.762	5.073
10 year +40% CC +10% A 480 minute summer	26.964	7.126	30 year +40% CC +10% A 1440 minute summer	13.935	3.735
10 year +40% CC +10% A 480 minute winter	17.914	7.126	30 year +40% CC +10% A 1440 minute winter	9.365	3.735
10 year +40% CC +10% A 600 minute summer	21.976	6.011	100 year +45% CC +10% A 15 minute summer	490.408	138.769
10 year +40% CC +10% A 600 minute winter	15.015	6.011	100 year +45% CC +10% A 15 minute winter	344.146	138.769
10 year +40% CC +10% A 720 minute summer	19.534	5.235	100 year +45% CC +10% A 30 minute summer	327.193	92.584
10 year +40% CC +10% A 720 minute winter	13.128	5.235	100 year +45% CC +10% A 30 minute winter	229.609	92.584
10 year +40% CC +10% A 960 minute summer	16.035	4.223	100 year +45% CC +10% A 60 minute summer	223.320	59.017
10 year +40% CC +10% A 960 minute winter	10.622	4.223	100 year +45% CC +10% A 60 minute winter	148.368	59.017
10 year +40% CC +10% A 1440 minute summer	11.683	3.131	100 year +45% CC +10% A 120 minute summer	127.093	33.587
10 year +40% CC +10% A 1440 minute winter	7.851	3.131	100 year +45% CC +10% A 120 minute winter	84.437	33.587
30 year +40% CC +10% A 15 minute summer	379.044	107.256	100 year +45% CC +10% A 180 minute summer	93.886	24.160
30 year +40% CC +10% A 15 minute winter	265.996	107.256	100 year +45% CC +10% A 180 minute winter	61.028	24.160
30 year +40% CC +10% A 30 minute summer	250.829	70.976	100 year +45% CC +10% A 240 minute summer	72.427	19.140
30 year +40% CC +10% A 30 minute winter	176.021	70.976	100 year +45% CC +10% A 240 minute winter	48.119	19.140

Flow+ v10.7 Copyright © 1988-2026 Causeway Technologies Ltd

Rainfall

Event	Peak Intensity (mm/hr)	Average Intensity (mm/hr)	Event	Peak Intensity (mm/hr)	Average Intensity (mm/hr)
100 year +45% CC +10% A 360 minute summer	53.694	13.817	100 year +45% CC +10% A 720 minute summer	29.767	7.978
100 year +45% CC +10% A 360 minute winter	34.903	13.817	100 year +45% CC +10% A 720 minute winter	20.005	7.978
100 year +45% CC +10% A 480 minute summer	41.569	10.986	100 year +45% CC +10% A 960 minute summer	24.214	6.376
100 year +45% CC +10% A 480 minute winter	27.618	10.986	100 year +45% CC +10% A 960 minute winter	16.040	6.376
100 year +45% CC +10% A 600 minute summer	33.662	9.207	100 year +45% CC +10% A 1440 minute summer	17.442	4.675
100 year +45% CC +10% A 600 minute winter	23.000	9.207	100 year +45% CC +10% A 1440 minute winter	11.722	4.675

Flow+ v10.7 Copyright © 1988-2026 Causeway Technologies Ltd

Results for 2 year +10% CC +10% A Critical Storm Duration. Lowest mass balance: 99.43%

Node Event	US Node	Peak (mins)	Level (m)	Depth (m)	Inflow (l/s)	Node Vol (m³)	Flood (m³)	Status
120 minute summer	Parking 1	78	33.412	0.072	4.9	4.1772	0.0000	OK
120 minute summer	Parking 2	78	33.411	0.071	4.8	4.0701	0.0000	OK
180 minute summer	Access 2	124	33.612	0.072	0.6	1.0378	0.0000	OK
180 minute summer	Access 1	124	33.637	0.097	0.6	1.1324	0.0000	OK

Link Event (Upstream Depth)	US Node	Link	Outflow (l/s)
120 minute summer	Parking 1	Infiltration	1.8
120 minute summer	Parking 2	Infiltration	1.8
180 minute summer	Access 2	Infiltration	0.1
180 minute summer	Access 1	Infiltration	0.1

Flow+ v10.7 Copyright © 1988-2026 Causeway Technologies Ltd

Results for 10 year +40% CC +10% A Critical Storm Duration. Lowest mass balance: 99.43%

Node Event	US Node	Peak (mins)	Level (m)	Depth (m)	Inflow (l/s)	Node Vol (m³)	Flood (m³)	Status
60 minute summer	Parking 1	52	33.469	0.129	16.4	11.9498	0.0000	OK
60 minute summer	Parking 2	51	33.467	0.127	16.1	11.6048	0.0000	OK
120 minute summer	Access 2	92	33.647	0.107	1.6	2.2827	0.0000	OK
120 minute summer	Access 1	116	33.682	0.142	1.6	2.4452	0.0000	OK

Link Event (Upstream Depth)	US Node	Link	Outflow (l/s)
60 minute summer	Parking 1	Infiltration	2.1
60 minute summer	Parking 2	Infiltration	2.1
120 minute summer	Access 2	Infiltration	0.2
120 minute summer	Access 1	Infiltration	0.2

Flow+ v10.7 Copyright © 1988-2026 Causeway Technologies Ltd

Results for 30 year +40% CC +10% A Critical Storm Duration. Lowest mass balance: 99.43%

Node Event	US Node	Peak (mins)	Level (m)	Depth (m)	Inflow (l/s)	Node Vol (m³)	Flood (m³)	Status
60 minute winter	Parking 1	59	33.505	0.165	15.5	16.8202	0.0000	OK
60 minute winter	Parking 2	59	33.502	0.162	15.2	16.3996	0.0000	OK
120 minute winter	Access 2	104	33.661	0.121	1.4	2.9461	0.0000	OK
120 minute winter	Access 1	118	33.701	0.161	1.4	3.1131	0.0000	OK

Link Event (Upstream Depth)	US Node	Link	Outflow (l/s)
60 minute winter	Parking 1	Infiltration	2.1
60 minute winter	Parking 2	Infiltration	2.1
120 minute winter	Access 2	Infiltration	0.2
120 minute winter	Access 1	Infiltration	0.2

Flow+ v10.7 Copyright © 1988-2026 Causeway Technologies Ltd

Results for 100 year +45% CC +10% A Critical Storm Duration. Lowest mass balance: 99.43%

Node Event	US Node	Peak (mins)	Level (m)	Depth (m)	Inflow (l/s)	Node Vol (m³)	Flood (m³)	Status
60 minute winter	Parking 1	60	33.554	0.214	20.4	23.6418	0.0000	OK
60 minute winter	Parking 2	60	33.549	0.209	19.9	22.9515	0.0000	OK
120 minute summer	Access 2	116	33.681	0.141	2.6	3.9870	0.0000	OK
120 minute summer	Access 1	118	33.727	0.187	2.6	4.2010	0.0000	OK

Link Event (Upstream Depth)	US Node	Link	Outflow (l/s)
60 minute winter	Parking 1	Infiltration	2.2
60 minute winter	Parking 2	Infiltration	2.2
120 minute summer	Access 2	Infiltration	0.3
120 minute summer	Access 1	Infiltration	0.2

Flow+ v10.7 Copyright © 1988-2026 Causeway Technologies Ltd

Cowan Consultancy
STRUCTURAL, CIVIL AND BUILDING CONSULTANTS

HR WALLINGFORD
GREENFIELD RUN-OFF RATE

Greenfield runoff rate estimation tool

hr wallingford

www.uksuds.com | Greenfield runoff rate estimation tool (https://www.uksuds.com/)

This is an estimation of the greenfield runoff rates that are used to meet normal best practice criteria in line with Environment Agency guidance "Rainfall runoff management for developments", SC030219 (2013), the SuDS Manual C753 (CIRIA, 2015) and the non-statutory standards for SuDS (Defra, 2015). This information on greenfield runoff rates may be the basis for setting consents for the drainage of surface water runoff from sites.

Project details

Date	14/04/2026
Calculated by	TB
Reference	Sholing FC
Model version	2.2.3

Location

Site name	Sholing FC
Site location	Portsmouth Road

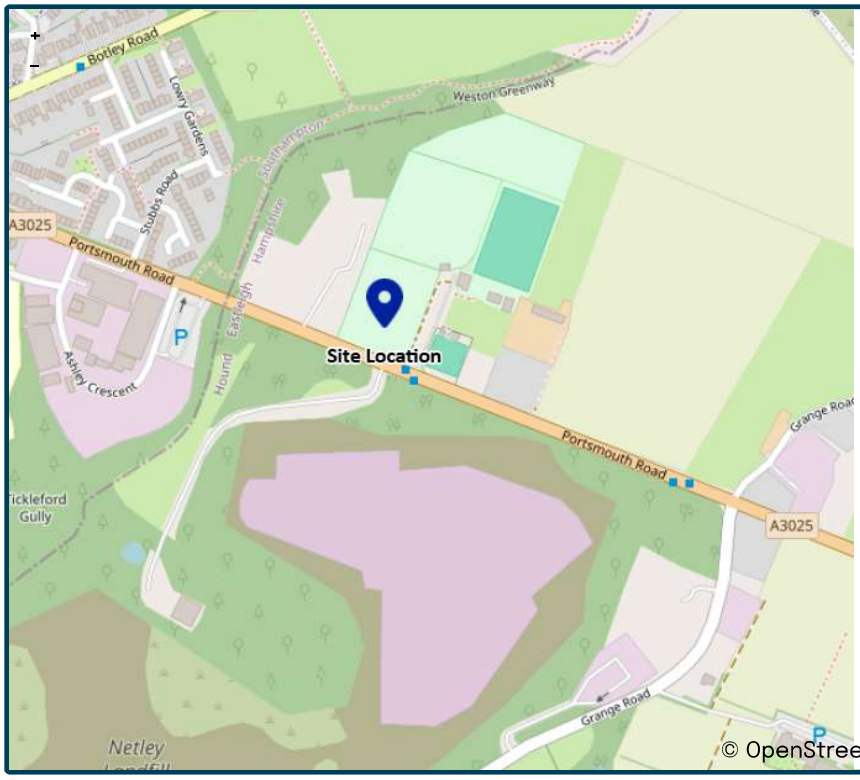

© OpenStreetMap (https://www.openstreetmap.org/copyright) contributors.

Site easting (British National Grid)	446504
Site northing (British National Grid)	110505

Site details

Total site area (ha)	0.3423 ha

We use cookies on this site to enhance your user experience

By clicking the Accept button, you agree to us doing so.

OK, I AGREE

MORE INFO

Greenfield runoff

Method

Method	IH124

IH124

	My value		Map value
SAAR (mm)	780	mm	780
How should SPR be derived?	WRAP soil type		
WRAP soil type	4		4
SPR	0.47		
QBar (IH124) (l/s)	1.9	l/s	

Growth curve factors

	My value	Map value
Hydrological region	7	7
1 year growth factor	0.85	
2 year growth factor	0.88	
10 year growth factor	1.62	
30 year growth factor	2.3	
100 year growth factor	3.19	
200 year growth factor	3.74	

We use cookies on this site to enhance your user experience

By clicking the Accept button, you agree to us doing so.

Results

Method	IH124	
Flow rate 1 year (l/s)	1.6	l/s
Flow rate 2 year (l/s)	1.7	l/s
Flow rate 10 years (l/s)	3.0	l/s
Flow rate 30 years (l/s)	4.3	l/s
Flow rate 100 years (l/s)	6.0	l/s
Flow rate 200 years (l/s)	7.0	l/s

Please note runoff estimation is subject to significant uncertainty. Results are therefore normally reported to only 1 decimal place. Where 2 decimal places are provided, this does not indicate accuracy to this level, it has been adopted to prevent 'zero' figures from being reported. Outputs less than 0.01 l/s are reported as 0.01 l/s.

Disclaimer

This report was produced using the Greenfield runoff rate estimation tool (2.2.3) developed by HR Wallingford and available at uksuds.com (https://www.uksuds.com/). The use of this tool is subject to the UK SuDS terms and conditions and licence agreement, which can both be found at uksuds.com/terms-conditions (https://www.uksuds.com/terms-conditions). The outputs from this tool have been used to estimate Greenfield runoff rates. The use of these results is the responsibility of the users of this tool. No liability will be accepted by HR Wallingford, the Environment Agency, Centre for Ecology and Hydrology, Wallingford Hydrosolutions or any other organisation for the use of these data in the design or operational characteristics of any drainage scheme.

We use cookies on this site to enhance your user experience

By clicking the Accept button, you agree to us doing so.

Cowan Consultancy
STRUCTURAL, CIVIL AND BUILDING CONSULTANTS

INFILTRATION TESTING AND GROUNDWATER MONITORING

2 The Long Barn,
Norton Farm, Selborne Road,
Alton, Hampshire GU34 3NB

0333 600 1221
enquiries@groundandwater.co.uk

groundandwater.co.uk

SOAKAGE LETTER REPORT (GWPR6989/SLR/March 2026 V1.01)	
CLIENT	Cowan Consultancy Ltd
SITE ADDRESS	Sholing Football Club, Portsmouth Road, Southampton, SO19 9PW
REPORT REFERENCE	The conditions and limitations of this soakage letter report can be viewed within Appendix A.
SITE DETAILS AND PROPOSED DEVELOPMENT	The site comprised a ~9,600m^2 rectangular shaped plot of land, with a north-east to south-west orientation, situated along the north-eastern side of Portsmouth Road. The site was located within Southampton a city along the south-coast Hampshire. A site location plan has been provided within Figure 1. The proposed development includes the redevelopment of an area of existing grassland into 6No. padel courts, 1No. outbuilding and allocated parking spaces. A proposed development plan has been provided within Figure 2.
ANTICIPATED GEOLOGY AND HYDROGEOLOGY	**Anticipated Geology** The British Geological Survey Solid and Drift Geology Map for the Southampton area (Sheet No. 315) revealed that the site was underlain by superficial 5th River Terrace Deposits comprising sand and gravel overlying bedrock deposits of the Earnley Sand Formation comprising sand, silt and clay. *River Terrace Deposits - Southampton* Extensive spreads of River Terrace Deposits occur along the Rivers Test, Itchen and Hamble. Eleven terraces have been provisionally recognised in the area. The deposits are variable in thickness, ranging from 1 to 5m, and generally consist of gravels, predominantly sub-angular to sub-rounded flints, with a considerable sand content. Poorly sorted clayey and sandy silts and silty clays overlie some of the terraces. *Earnley Sand Formation* The Earnley Sand Formation is fairly uniform throughout the district and comprises mainly green, glauconitic, clayey, silty fine-grained sand and sandy silt. The transition between Earnley Sand and the underlying Wittering Formation is marked by relatively structureless glauconitic sand and laminated and thin-bedded clays and sands of the Wittering Formation. **Anticipated Hydrogeology** A study of the aquifer maps on the DEFRA website revealed that the site was underlain by a Secondary A Aquifer comprising the Superficial River Terrace Deposits overlying a Secondary A Bedrock Aquifer associated with the Earnley Sand Formation. From analysis of hydrogeological and topographical maps, groundwater was anticipated to be encountered at depth within the Earnley Sand Formation; however, perched water may be encountered at shallower depths, specifically capping any cohesive bands of soils and/or within the shallow surface soils (i.e. Topsoil, Made Ground and the Superficial River Terrace Deposits), especially after prolonged periods of rainfall. **BGS Borehole Records** A BGS borehole (SU41SE389) located ~0.07km north-west of the site in similar geological strata noted Topsoil to 0.30m bgl underlain by orange silty, sandy, clayey gravel to 1.35m bgl overlying fine grey sand to 3.00m bgl. Groundwater was not struck during the investigation.
SCOPE OF WORKS	Site works were undertaken in two phases. The first phase was undertaken on 11th of March 2026 and comprised the machine excavation of 3No. Trial Pits (TP1 – TP3) to depths ranging from 1.60 to 2.05m bgl. Soakage testing

2 The Long Barn,
Norton Farm, Selborne Road,
Alton, Hampshire GU34 3NB

0333 600 1221
enquiries@groundandwater.co.uk

groundandwater.co.uk

in accordance with BRE365 was attempted within TP1 & TP2 and completed within TP3. Upon completion of the site works all trial pits were backfilled and made good/reinstated in relation to the surrounding area.

Percolation Pits (PP1 – PP3) were machine excavated to 0.80m bgl to complete pv testing to calculate an infiltration rate. Due to the granular material encountered the 300mm cube could not be hand excavated within the bottom of the trial pit therefore an infiltration rate could not be calculated.

The second phase of site works were undertaken on 11th of March 2026 and comprised the drilling of 4No. Windowless Sampler Boreholes (WS1 – WS4) to a depth ranging from 1.00 – 1.60m bgl. The boreholes were terminated early due to refusal within the granular strata. Groundwater monitoring wells were installed within WS1 – WS3 with an internal diameter of 50mm and a response zone of 0.30 – 1.00m bgl within WS1 & WS3 and a response zone of 0.30 – 1.60m bgl within WS2. The installation details can be viewed within the table below.

Combined Ground-gas and Groundwater Monitoring Well Construction

Trial Hole	Type of Installation	Depth of Installation (m bgl)	Thickness of slotted piping with gravel filter pack (m)	Depth of plain piping with bentonite seal (m bgl)	Response Zone (m bgl)	Piping internal diameter (mm)
WS1	Standpipe	1.00	0.70	0.30	0.30 – 1.00	50
WS2	Standpipe	1.60	1.30	0.30	0.30 – 1.60	50
WS3	Standpipe	1.00	0.70	0.30	0.30 – 1.00	50

A trial hole location plan has been provided within Figure 3.

GROUND CONDITIONS ENCOUNTERED

A summary of the ground conditions encountered can be viewed within the following table. The trial hole logs can be seen within Appendix B.

Summary of Strata Encountered (WS1 – WS4, TP1 – TP3 & PP1 – PP3)

Strata	Top Depth (m bgl)	Base Depth (m bgl)	Thickness (m)
TOPSOIL: Dark brown slightly gravelly fine to coarse grained SAND. Gravel is sub-angular to sub-rounded fine to medium flint. *(All borehole and trial pits on-site).*	GL	0.30 – 0.70	0.30 – 0.70
SUPERFICIAL RIVER TERRACE DEPOSITS (Granular): Orangish brown slightly clayey slightly gravelly fine to coarse grained SAND. Gravel is sub-angular to sub-rounded fine to medium flint. (PP1 & PP3).	0.30 – 0.40	0.80	>0.40 – >0.50
SUPERFICIAL RIVER TERRACE DEPOSITS (Granular): Light brown to yellowish brown mottled sandy GRAVEL of sub-angular to sub-rounded fine to coarse flint. Sand is fine to coarse grained. (PP2, WS2 & WS3)	0.30 – 0.70	0.80 – 1.60	>0.30 – >1.20
SUPERFICIAL RIVER TERRACE DEPOSITS (Granular): Light brown slightly sandy GRAVEL of sub-angular to sub-rounded fine to coarse flint. Sand is fine to coarse grained. (TP1, TP3 & WS4).	0.30 – 0.60	1.00 – 2.05	>0.70 – >1.45

2 The Long Barn,
Norton Farm, Selborne Road,
Alton, Hampshire GU34 3NB

0333 600 1221
enquiries@groundandwater.co.uk

groundandwater.co.uk

	SUPERFICIAL RIVER TERRACE DEPOSITS (Cohesive): Orangish brown to brownish grey mottled slightly gravelly fine to coarse grained SAND. Gravel is subangular to sub-rounded fine to medium flint. (TP2).	0.40	0.70	0.30
	SUPERFICIAL RIVER TERRACE DEPOSITS (Cohesive): Orangish brown slightly gravelly fine to coarse grained SAND. Gravel is sub-angular to sub-rounded fine to coarse flint. (TP2).	0.70	2.00	>1.30
	SUPERFICIAL RIVER TERRACE DEPOSITS (Cohesive): Brown to orangish brown mottled slightly sandy GRAVEL of sub-angular to sub-rounded fine to coarse flint. Sand is fine to coarse grained. (WS1).	0.50	1.00	>0.50

GROUNDWATER

The following table below summarises any groundwater that was encountered during the intrusive investigation.

Summary of Groundwater Strikes	
Trial Hole	**Depth of Strike (m bgl)**
TP1	2.05
TP2	2.00
TP3	1.60
WS1	No groundwater encountered
WS2	No groundwater encountered.
WS3	0.80
WS4	No groundwater encountered.
PP1	No groundwater encountered.
PP2	No groundwater encountered.
PP3	0.80

Changes in groundwater level occur for a number of reasons including seasonal effects and variations in drainage. The investigation was undertaken in March 2026 when groundwater levels are likely to be approaching or at their annual maximum (highest elevation). Exact groundwater levels may only be determined through long term measurements from monitoring wells installed on-site.

At the time of reporting, groundwater monitoring had not been undertaken at the site.

SOAKAGE TESTING RESULTS

Soakage testing in accordance with the principles of BRE365 was attempted within TP1 & TP2 and completed in accordance with BRE365 within TP3. The trial pits were bottomed out within the Superficial River Terrace Deposits. The results are presented within the following table.

Soakage Test Results						
Trial Hole	**Test**	**Base of Soakage Pit (m bgl)**	**Start Depth (m bgl)**	**Finish Depth (m bgl)**	**Time Taken (mins)**	**Infiltration Rate (m/sec)**
TP1	1*	2.05	0.76	1.43	240	9.111 x 10^6
TP2	1*	2.00	0.58	1.21	240	7.36 x 10^6
TP3	1	1.60	0.66	1.40	90	3.019 x 10^5
	2	1.32	0.62	1.29	56	7.017 x 10^5
	3	1.29	0.82	1.28	30	7.42 x 10^5
***Given the relatively slow infiltration rate encountered and time restraints within the site day, only one test could be undertaken, and it did not reach 75% mark.**						

2 The Long Barn,
Norton Farm, Selborne Road,
Alton, Hampshire GU34 3NB

0333 600 1221
enquiries@groundandwater.co.uk

groundandwater.co.uk

The principles of sustainable urban drainage system (SUDS) should be applied to reduce the risk of flooding from surface water ponding and collection associated with the construction of the foundations.

The principles of sustainable urban drainage system (SUDS) should be applied to reduce the risk of flooding from surface water ponding. The following may wish to be considered:

- Rainwater use as a resource (for example rainwater harvesting, blue roofs for irrigation)
- Rainwater infiltration to ground at or close to source
- Rainwater attenuation in green infrastructure features for gradual release (for example green roofs, rain gardens)
- Rainwater discharge direct to a watercourse (unless not appropriate)
- Controlled rainwater discharge to a surface water sewer or drain
- Controlled rainwater discharge to a combined sewer.

Consultation with the Environment Agency must be sought regarding any use that may have an impact on groundwater resources, abstractions and surface water features/watercourses.

The British Standard BS8301 :1985 "Code of practice for building drainage" (1985), suggests that: "A soakaway is not desirable nearer to a building than about 5 metres nor in such a position that the ground below foundations is likely to be adversely affected."

Figure 1 **Site Location Plan**
Figure 2 **Proposed Development Plan**
Figure 3 **Trial Hole Location Plan**

Appendix A **Conditions and Limitations**
Appendix B **Trial Hole Logs**

Issue	Prepared By	Checked By	Verified By
v.1.01			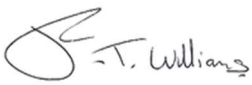
	James New Beng (Hons) Geotechnical and Geoenvironmental Engineer	Adam Young BSc (Hons) FGS Senior Geotechnical and Geo-environmental Engineer	Francis Williams MGeol (Hons) FGS CEnv CGeol Director

2 The Long Barn,
Norton Farm, Selborne Road,
Alton, Hampshire GU34 3NB

0333 600 1221
enquiries@groundandwater.co.uk

groundandwater.co.uk

FIGURES

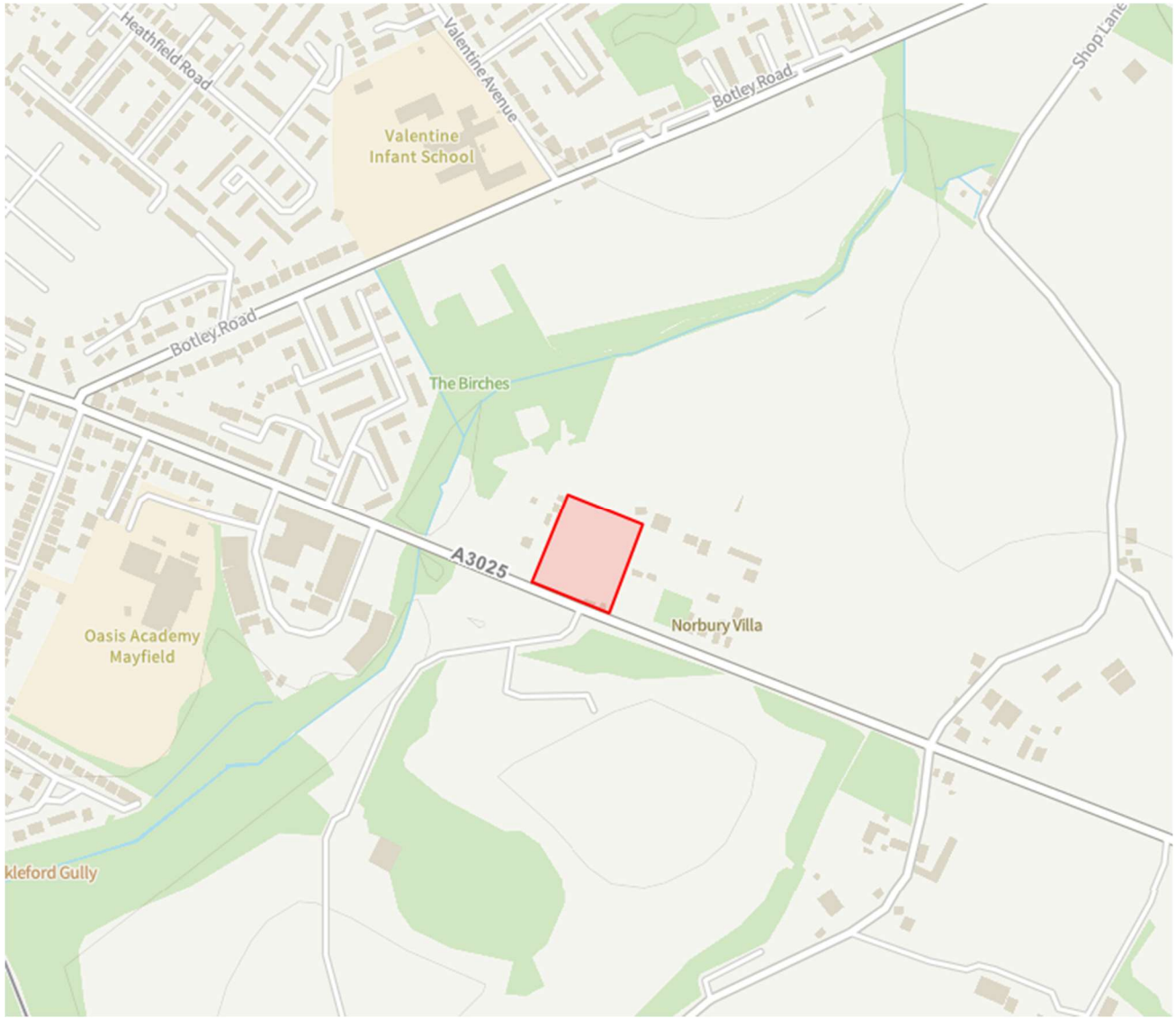

Site boundary

Not to Scale

Sholing Football Club, Portsmouth Road, Southampton, SO19 9PW	
Cowan Consultancy Ltd	**March 2026**
Figure 1: Site Location Plan	**GWPR6989**

ground&water

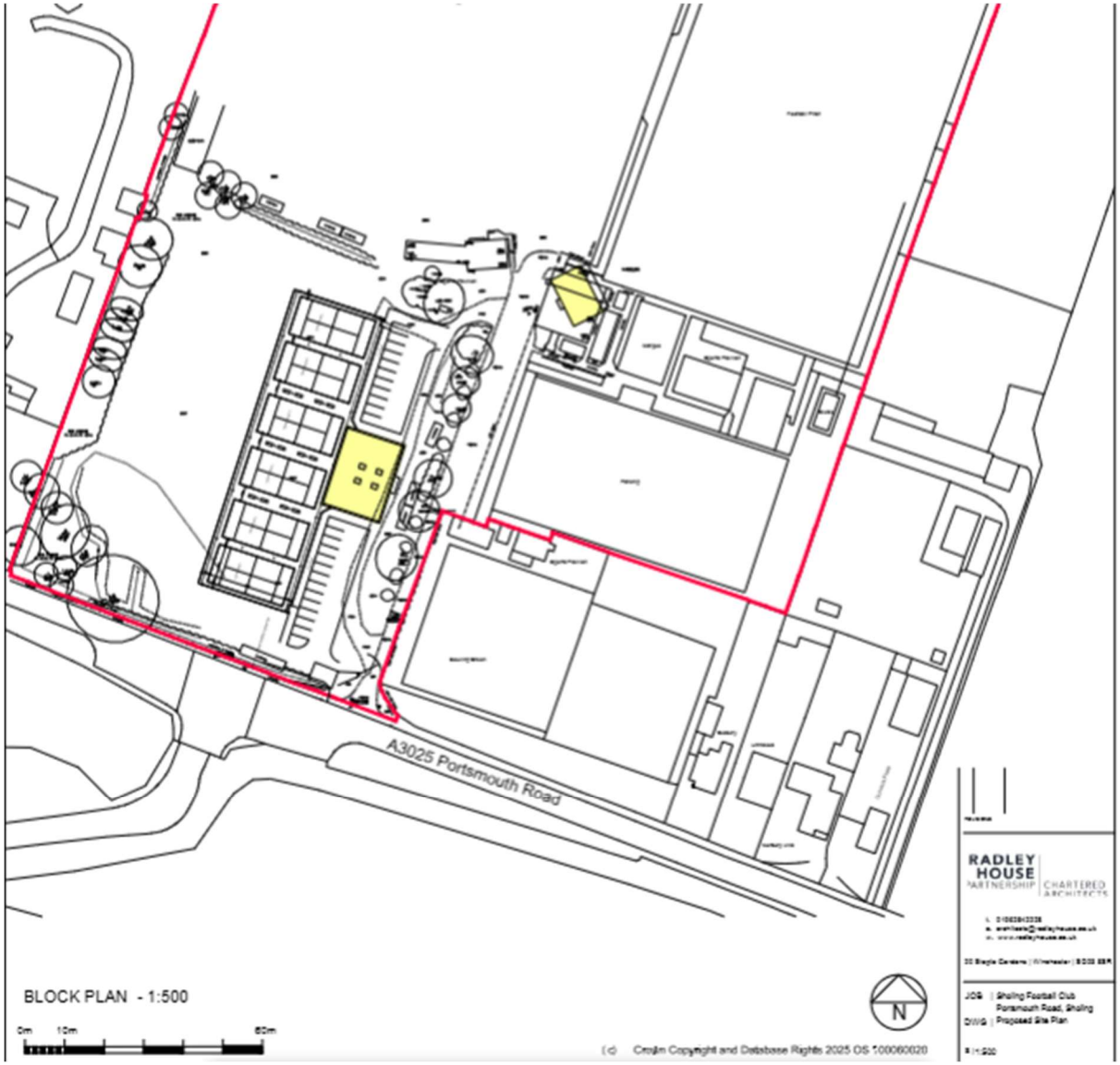

Site boundary

Not to Scale

Sholing Football Club, Portsmouth Road, Southampton, SO19 9PW

Cowan Consultancy Ltd	**March 2026**
Figure 2: Proposed Development Plan	**GWPR6989**

ground&water

Site boundary

Machine Excavated Trial Pit for Soakage Testing

Windowless Sampler Borehole

Machine Excavated Trial Pit for Percolation Testing

Sholing Football Club, Portsmouth Road, Southampton, SO19 9PW	
Cowan Consultancy Ltd	**March 2026**
Figure 3 – Trial Hole Location Plan	**GWPR6989**

ground&water

2 The Long Barn,
Norton Farm, Selborne Road,
Alton, Hampshire GU34 3NB

0333 600 1221
enquiries@groundandwater.co.uk

groundandwater.co.uk

APPENDIX A: Conditions and Limitations

ground&water

2 The Long Barn,
Norton Farm, Selborne Road,
Alton, Hampshire GU34 3NB

0333 600 1221
enquiries@groundandwater.co.uk

groundandwater.co.uk

The ground is a product of continuing natural and artificial processes. As a result, the ground will exhibit a variety of characteristics that vary from place to place across a site, and also with time. Whilst a ground investigation will mitigate to a greater or lesser degree against the resulting risk from variation, the risks cannot be eliminated.

The report has been prepared on the basis of information, data and materials which were available at the time of writing. Accordingly, any conclusions, opinions or judgements made in the report should not be regarded as definitive or relied upon to the exclusion of other information, opinions and judgements.

The investigation, interpretations, and recommendations given in this report were prepared for the sole benefit of the client in accordance with their brief; as such these do not necessarily address all aspects of ground behaviour at the site. No liability is accepted for any reliance placed on it by others unless specifically agreed in writing.

Any decisions made by you, or by any organisation, agency or person who has read, received or been provided with information contained in the report ("you" or "the Recipient") are decisions of the Recipient and we will not make, or be deemed to make, any decisions on behalf of any Recipient. We will not be liable for the consequences of any such decisions.

Current regulations and good practice were used in the preparation of this report. An appropriately qualified person must review the recommendations given in this report at the time of preparation of the scheme design to ensure that any recommendations given remain valid in light of changes in regulation and practice, or additional information obtained regarding the site.

Any Recipient must take into account any other factors apart from the Report of which they and their experts and advisers are or should be aware. The information, data, conclusions, opinions and judgements set out in the report may relate to certain contexts and may not be suitable in other contexts. It is your responsibility to ensure that you do not use the information we provide in the wrong context.

This report is based on readily available geological records, the recorded physical investigation, the strata observed in the works, together with the results of completed site and laboratory tests. Whilst skill and care has been taken to interpret these conditions likely between or below investigation points, the possibility of other characteristics not revealed cannot be discounted, for which no liability can be accepted. The impact of our assessment on other aspects of the development required evaluation by other involved parties.

The opinions expressed cannot be absolute due to the limitations of time and resources within the context of the agreed brief and the possibility of unrecorded previous in ground activities. The ground conditions have been sampled or monitored in recorded locations and tests for some of the more common chemicals generally expected. Other concentrations of types of chemicals may exist. It was not part of the scope of this report to comment on environment/contaminated land considerations.

The conclusions and recommendations relate to Sholing Football Club, Portsmouth Road, Southampton, SO19 9PW.

Trial hole is a generic term used to describe a method of direct investigation. The term trial pit, borehole or window sampler borehole implies the specific technique used to produce a trial hole.

2 The Long Barn,
Norton Farm, Selborne Road,
Alton, Hampshire GU34 3NB

0333 600 1221
enquiries@groundandwater.co.uk

groundandwater.co.uk

The depth to roots and/or of desiccation may vary from that found during the investigation. The client is responsible for establishing the depth to roots and/or of desiccation on a plot-by-plot basis prior to the construction of foundations. Where trees are mentioned in the text this means existing trees, recently removed trees (approximately 15 years to full recovery on cohesive soils) and those planned as part of the site landscaping.

Ownership of copyright of all printed material including reports, laboratory test results, trial pit and borehole log sheets, including drillers log sheets, remain with Ground and Water Limited. Licence is for the sole use of the client and may not be assigned, transferred or given to a third party.

Only our client may rely on this report and should this report or any information contained in it be provided to any third party we accept no responsibility to the third party for the contents of this report save to the extent expressly outlined by us in writing in a reliance letter addressed from us to the third party.

Recipients are not permitted to publish this report outside of their organisation without our express written consent.

2 The Long Barn,
Norton Farm, Selborne Road,
Alton, Hampshire GU34 3NB

0333 600 1221
enquiries@groundandwater.co.uk

groundandwater.co.uk

APPENDIX B: Trial Hole Logs

Trial Pit Log

Project Name: Sholing Football Club	Client: Cowan Consultancy Ltd	Date: 11/03/2026
Location: Portsmouth Road, Southampton, SO19 9PW	Contractor: AB SI	
Project No. : GWPR6989	Crew Name:	Equipment: 3 Tonne Machine Excavator

Location Number	Location Type	Level	Logged By	Scale	Page Number
PP1	TP		JN	1:25	Sheet 1 of 1

Well	Water Strikes	Sample and In Situ Testing: Depth (m)	Type	Results	Depth (m)	Level (m)	Legend	Stratum Description
		0.20	D					TOPSOIL: Dark brown slightly gravelly fine to coarse grained SAND. Gravel is sub-angular to sub-rounded fine to medium flint.
					0.40			Orangish brown slightly clayey slightly gravelly fine to coarse grained SAND. Gravel is sub-angular to sub-rounded fine to medium flint. (RIVER TERRACE DEPOSITS).
		0.50	D					
		0.80	D		0.80			End of Borehole at 0.800m

1
2
3
4
5

Dimensions		Trench Support and Comment			Pumping Data		
Pit Length	Pit Width	Pit Stability	Shoring Used	Remarks	Date	Rate	Remarks

Remarks

Percolation Pit completed to 0.80m bgl.
Roots noted to 0.20m bgl.
Groundwater not noted.

Trial Pit Log

Project Name: Sholing Football Club	Client: Cowan Consultancy Ltd	Date: 11/03/2026
Location: Portsmouth Road, Southampton, SO19 9PW	Contractor: AB SI	
Project No. : GWPR6989	Crew Name:	Equipment: 3 Tonne Machine Excavator

Location Number	Location Type	Level	Logged By	Scale	Page Number
PP2	TP		JN	1:25	Sheet 1 of 1

Well	Water Strikes	Sample and In Situ Testing: Depth (m)	Type	Results	Depth (m)	Level (m)	Legend	Stratum Description
		0.20	D		0.30			TOPSOIL: Dark brown slightly gravelly fine to coarse grained SAND. Gravel is sub-angular to sub-rounded fine to medium flint.
		0.50	D					Light brown to yellowish brown mottled sandy GRAVEL of sub-angular to sub-rounded fine to coarse flint. Sand is fine to coarse grained. (RIVER TERRACE DEPOSITS).
		0.80	D		0.80			End of Borehole at 0.800m

1
2
3
4
5

Dimensions		Trench Support and Comment			Pumping Data		
Pit Length	Pit Width	Pit Stability	Shoring Used	Remarks	Date	Rate	Remarks

Remarks

Percolation Pit completed to 0.80m bgl.
Roots noted to 0.20m bgl.
Groundwater not noted.

Trial Pit Log

Project Name: Sholing Football Club	Client: Cowan Consultancy Ltd	Date: 11/03/2026
Location: Portsmouth Road, Southampton, SO19 9PW	Contractor: AB SI	
Project No. : GWPR6989	Crew Name:	Equipment: 3 Tonne Machine Excavator

Location Number	Location Type	Level	Logged By	Scale	Page Number
PP3	TP		JN	1:25	Sheet 1 of 1

Well	Water Strikes	Sample and In Situ Testing: Depth (m)	Type	Results	Depth (m)	Level (m)	Legend	Stratum Description
		0.20	D		0.30			TOPSOIL: Dark brown slightly gravelly fine to coarse grained SAND. Gravel is sub-angular to sub-rounded fine to medium flint.
		0.50	D					Orangish brown slightly clayey slightly gravelly fine to coarse grained SAND. Gravel is sub-angular to sub-rounded fine to medium flint. (RIVER TERRACE DEPOSITS).
	▼	0.80	D		0.80			End of Borehole at 0.800m

1
2
3
4
5

Dimensions		Trench Support and Comment			Pumping Data		
Pit Length	Pit Width	Pit Stability	Shoring Used	Remarks	Date	Rate	Remarks

Remarks

Percolation Pit completed to 0.80m bgl.
Roots noted to 0.20m bgl.
Groundwater struck at 0.80m bgl.

Trial Pit Log

Project Name: Sholing Football Club	Client: Cowan Consultancy Ltd	Date: 11/03/2026
Location: Portsmouth Road, Southampton, SO19 9PW	Contractor: AB SI	
Project No. : GWPR6989	Crew Name:	Equipment: 3 Tonne Machine Excavator

Location Number	Location Type	Level	Logged By	Scale	Page Number
TP1	TP		JN	1:25	Sheet 1 of 1

Well	Water Strikes	Sample and In Situ Testing: Depth (m)	Type	Results	Depth (m)	Level (m)	Legend	Stratum Description
		0.20	D					TOPSOIL: Dark brown slightly gravelly fine to coarse grained SAND. Gravel is sub-angular to sub-rounded fine to medium flint.
		0.50	D		0.60			
		0.80	D					Light brown slightly sandy GRAVEL of sub-angular to sub-rounded fine to coarse flint. Sand is fine to coarse grained. (RIVER TERRACE DEPOSITS).
		1.00	D					
		1.50	D					
	▼	2.00	D		2.05			
								End of Borehole at 2.050m

1 2 3 4 5

Dimensions		Trench Support and Comment			Pumping Data		
Pit Length	Pit Width	Pit Stability	Shoring Used	Remarks	Date	Rate	Remarks

Remarks

Trial Pit completed to 2.05m bgl.
Roots noted to 0.20m bgl.
Groundwater struck at 2.05m bgl.

Trial Pit Log

Project Name: Sholing Football Club	Client: Cowan Consultancy Ltd	Date: 11/03/2026
Location: Portsmouth Road, Southampton, SO19 9PW	Contractor: AB SI	
Project No. : GWPR6989	Crew Name:	Equipment: 3 Tonne Machine Excavator

Location Number	Location Type	Level	Logged By	Scale	Page Number
TP2	TP		JN	1:25	Sheet 1 of 1

Well	Water Strikes	Sample and In Situ Testing: Depth (m)	Type	Results	Depth (m)	Level (m)	Legend	Stratum Description
		0.20	D					TOPSOIL: Dark brown slightly gravelly fine to coarse grained SAND. Gravel is sub-angular to sub-rounded fine to medium flint.
		0.50	D		0.40			Orangish brown to brownish grey mottled slightly gravelly fine to coarse grained SAND. Gravel is sub-angular to sub-rounded fine to medium flint. (RIVER TERRACE DEPOSITS).
		0.80	D		0.70			Orangish brown slightly gravelly fine to coarse grained SAND. Gravel is sub-angular to sub-rounded fine to coarse flint. (RIVER TERRACE DEPOSITS).
		1.00	D					
		1.50	D					
	▼	2.00	D		2.00			End of Borehole at 2.000m

1 2 3 4 5

Dimensions		Trench Support and Comment			Pumping Data		
Pit Length	Pit Width	Pit Stability	Shoring Used	Remarks	Date	Rate	Remarks

Remarks

Trial Pit completed to 2.00m bgl.
Roots noted to 0.40m bgl.
Groundwater struck at 2.00m bgl.

Trial Pit Log

Project Name: Sholing Football Club	Client: Cowan Consultancy Ltd	Date: 11/03/2026
Location: Portsmouth Road, Southampton, SO19 9PW	Contractor: AB SI	
Project No. : GWPR6989	Crew Name:	Equipment: 3 Tonne Machine Excavator

Location Number	Location Type	Level	Logged By	Scale	Page Number
TP3	TP		JN	1:25	Sheet 1 of 1

Well	Water Strikes	Sample and In Situ Testing: Depth (m)	Type	Results	Depth (m)	Level (m)	Legend	Stratum Description
		0.20	D		0.30			TOPSOIL: Dark brown slightly gravelly fine to coarse grained SAND. Gravel is sub-angular to sub-rounded fine to medium flint.
		0.50	D					Light brown slightly sandy GRAVEL of sub-angular to sub-rounded fine to coarse flint. Sand is fine to coarse grained. (RIVER TERRACE DEPOSITS).
		0.80	D					
		1.00	D					
	▼	1.50	D		1.60			End of Borehole at 1.600m

1 2 3 4 5

Dimensions		Trench Support and Comment			Pumping Data		
Pit Length	Pit Width	Pit Stability	Shoring Used	Remarks	Date	Rate	Remarks

Remarks

Trial Pit completed to 1.60m bgl.
Roots noted to 0.40m bgl.
Groundwater struck at 1.60m bgl.

Percussion Drilling Log

Project Name: Sholing Football Club	Client: Cowan Consultancy Ltd	Date: 11/03/2026
Location: Portsmouth Road, Southampton, SO19 9PW	Contractor: AB SI	
Project No. : GWPR6989	Crew Name: AB SI	Drilling Equipment: Archway Dart

Borehole Number	Hole Type	Level	Logged By	Scale	Page Number
WS1	WLS		JN	1:50	Sheet 1 of 1

Well	Water Strikes	Sample and In Situ Testing			Depth (m)	Level (m)	Legend	Stratum Description
		Depth (m)	Type	Results				
		0.20	D					TOPSOIL: Dark brown slightly gravelly fine grained SAND. Gravel is sub-angular to sub-rounded fine to medium flint.
		0.50	D		0.50			Brown to orangish brown mottled slightly sandy GRAVEL of sub-angular to sub-rounded fine to coarse flint. Sand is fine to coarse grained. (RIVER TERRACE DEPOSITS).
		0.80	D					
		1.00	D		1.00			
		1.00	SPT	50 (13,15/50 for 10mm)				

End of Borehole at 1.000m

1 2 3 4 5 6 7 8 9 10

Hole Diameter		Casing Diameter		Chiselling				Inclination and Orientation			
Depth Base	Diameter	Depth Base	Diameter	Depth Top	Depth Base	Duration	Tool	Depth Top	Depth Base	Inclination	Orientation

Remarks

Windowless Sampler Borehole completed to 1.00m bgl.
Roots noted to 0.20m bgl.
Groundwater not noted.

Percussion Drilling Log

Project Name: Sholing Football Club	Client: Cowan Consultancy Ltd	Date: 11/03/2026
Location: Portsmouth Road, Southampton, SO19 9PW	Contractor: AB SI	
Project No. : GWPR6989	Crew Name: AB SI	Drilling Equipment: Archway Dart

Borehole Number	Hole Type	Level	Logged By	Scale	Page Number
WS2	WLS		JN	1:50	Sheet 1 of 1

Well	Water Strikes	Sample and In Situ Testing: Depth (m)	Type	Results	Depth (m)	Level (m)	Legend	Stratum Description
		0.20	D		0.40			TOPSOIL: Dark brown slightly gravelly fine grained SAND. Gravel is sub-angular to sub-rounded fine to medium flint.
		0.50	D					Light brown to yellowish brown mottled sandy GRAVEL of sub-angular to sub-rounded fine to coarse flint. Sand is fine to coarse grained. (RIVER TERRACE DEPOSITS).
		0.80	D					
		1.00	D					
		1.00	SPT	N=13 (4,3/3,3,3,4)				
		1.50	D					
		1.60	SPT	N=65 (14,18/15,16,16,18)	1.60			End of Borehole at 1.600m

Hole Diameter		Casing Diameter		Chiselling				Inclination and Orientation			
Depth Base	Diameter	Depth Base	Diameter	Depth Top	Depth Base	Duration	Tool	Depth Top	Depth Base	Inclination	Orientation

Remarks

Windowless Sampler Borehole completed to 1.60m bgl.
Roots noted to 0.20m bgl.
Groundwater not noted.

Percussion Drilling Log

Project Name: Sholing Football Club	Client: Cowan Consultancy Ltd	Date: 11/03/2026
Location: Portsmouth Road, Southampton, SO19 9PW	Contractor: AB SI	
Project No. : GWPR6989	Crew Name: AB SI	Drilling Equipment: Archway Dart

Borehole Number	Hole Type	Level	Logged By	Scale	Page Number
WS3	WLS		JN	1:50	Sheet 1 of 1

Well	Water Strikes	Sample and In Situ Testing: Depth (m)	Type	Results	Depth (m)	Level (m)	Legend	Stratum Description
		0.20	D					TOPSOIL: Dark brown slightly gravelly fine grained SAND. Gravel is sub-angular to sub-rounded fine to medium flint.
		0.50	D					
		0.80	D		0.70			
		1.00	D		1.00			Light brown to yellowish brown mottled sandy GRAVEL of sub-angular to sub-rounded fine to coarse flint. Sand is fine to coarse grained. (RIVER TERRACE DEPOSITS).
		1.00	SPT	N=68 (6,14/16,16,18,18)				
								End of Borehole at 1.000m

Hole Diameter		Casing Diameter		Chiselling				Inclination and Orientation			
Depth Base	Diameter	Depth Base	Diameter	Depth Top	Depth Base	Duration	Tool	Depth Top	Depth Base	Inclination	Orientation

Remarks

Windowless Sampler Borehole completed to 1.00m bgl.
Roots noted to 0.20m bgl.
Groundwater struck at 0.80m bgl.

Percussion Drilling Log

Project Name: Sholing Football Club	Client: Cowan Consultancy Ltd	Date: 11/03/2026
Location: Portsmouth Road, Southampton, SO19 9PW	Contractor: AB SI	
Project No. : GWPR6989	Crew Name: AB SI	Drilling Equipment: Archway Dart

Borehole Number	Hole Type	Level	Logged By	Scale	Page Number
WS4	WLS		JN	1:50	Sheet 1 of 1

Well	Water Strikes	Sample and In Situ Testing: Depth (m)	Type	Results	Depth (m)	Level (m)	Legend	Stratum Description
		0.20	D		0.30			TOPSOIL: Dark brown slightly gravelly fine grained SAND. Gravel is sub-angular to sub-rounded fine to medium flint.
		0.50	D					Light brown slightly sandy GRAVEL of sub-angular to sub-rounded fine to coarse flint. Sand is fine to coarse grained. (RIVER TERRACE DEPOSITS).
		0.80	D					
		1.00	D		1.00			End of Borehole at 1.000m
		1.00	SPT	N=64 (7,8/12,14,18,20)				

Hole Diameter		Casing Diameter		Chiselling				Inclination and Orientation			
Depth Base	Diameter	Depth Base	Diameter	Depth Top	Depth Base	Duration	Tool	Depth Top	Depth Base	Inclination	Orientation

Remarks

Windowless Sampler Borehole completed to 1.00m bgl.
Roots noted to 0.20m bgl.
Groundwater not noted.

2 The Long Barn,
Norton Farm, Selborne Road,
Alton, Hampshire GU34 3NB

0333 600 1221
enquiries@groundandwater.co.uk

groundandwater.co.uk

Groundwater Monitoring Report	
SITE ADDRESS	Sholing Football Club, Portsmouth Road, Southampton, SO19 9PW
CLIENT	Cowan Consultancy Ltd
REPORT REFERENCE	GWPR6989/GMR/April 2026. The conditions and limitations of this groundwater monitoring report can be viewed within Appendix A. A technical glossary has also been provided within Appendix B.
SCOPE OF WORKS	The groundwater monitoring site works were undertaken on 11th of March 2026 and comprised the drilling of 4No. Windowless Sampler Boreholes (WS1 – WS4) to a depth ranging from 1.00 – 1.60m bgl. The boreholes were terminated early due to refusal within the granular strata. Groundwater monitoring wells were installed within WS1 – WS3 with an internal diameter of 50mm and a response zone of 0.30 – 1.00m bgl within WS1 & WS3 and a response zone of 0.30 – 1.60m bgl within WS2. The installation details can be viewed within the table below. A trial hole location plan has been provided within Figure 2.

Combined Ground-gas and Groundwater Monitoring Well Construction

Trial Hole	Type of Installation	Depth of Installation (m bgl)	Thickness of slotted piping with gravel filter pack (m)	Depth of plain piping with bentonite seal (m bgl)	Response Zone (m bgl)	Piping internal diameter (mm)
WS1	Standpipe	1.00	0.70	0.30	0.30 – 1.00	50
WS2	Standpipe	1.60	1.30	0.30	0.30 – 1.60	50
WS3	Standpipe	1.00	0.70	0.30	0.30 – 1.00	50

The Trial Hole Logs have been provided within Appendix C.

SITE DETAILS	The site comprised a ~9,600m^2 rectangular shaped plot of land, with a north-east to south-west orientation, situated along the north-eastern side of Portsmouth Road. The site was located within Southampton a city along the south-coast of Hampshire. A site location plan has been provided within Figure 1.
GROUNDWATER	The following table below summarises any groundwater that was encountered during the intrusive investigation.

Summary of Groundwater Strikes

Trial Hole	Depth of Strike (m bgl)
TP1	2.05
TP2	2.00
TP3	1.60
WS1	No groundwater encountered
WS2	No groundwater encountered.
WS3	0.80
WS4	No groundwater encountered.
PP1	No groundwater encountered.
PP2	No groundwater encountered.
PP3	0.80

2 The Long Barn,
Norton Farm, Selborne Road,
Alton, Hampshire GU34 3NB

0333 600 1221
enquiries@groundandwater.co.uk

groundandwater.co.uk

Groundwater Monitoring Report

	The Trial Pits and Percolation Pits relate to the Soakage Letter Report reference (GWPR6989/SLR/March 2026 V1.01).
GROUNDWATER MONITORING	Groundwater monitoring was undertaken for the proposed development on-site within the 3no. boreholes during 3No. visits from March – April 2026, to provide an insight on worse case levels of groundwater. The results from the monitoring have been tabulated below:

Summary of Groundwater Observations

Date	Trial Hole	Water Level (m bgl)	Final Well Depth (m bgl)
26/03/2026	WS1	Hole Dry	0.80
	WS2	Hole Dry	1.53
	WS3	Hole Dry	0.80
30/03/2026	WS1	Hole Dry	0.80
	WS2	Hole Dry	1.53
	WS3	Hole Dry	0.80
07/04/2026	WS1	Hole Dry	0.80
	WS2	Hole Dry	1.50
	WS3	Hole Dry	0.80

Please feel free to contact us should you have any queries regarding the information enclosed within this report.

Summary of Authors

Prepared By	Checked By	Approved By
James New Beng (Hons) Geotechnical and Geoenvironmental Engineer	Libby Bennett BSc (Hons) Geotechnical and Geoenvironmental Engineer	Francis Williams MGeol (Hons) FGS CEnv CGeol Director

For and on behalf of Ground and Water Limited

FIGURES **3**

APPENDIX A: Conditions and Limitations **4**

APPENDIX B: Technical Glossary **7**

APPENDIX C: Trial Hole Logs **8**

2 The Long Barn,
Norton Farm, Selborne Road,
Alton, Hampshire GU34 3NB

0333 600 1221
enquiries@groundandwater.co.uk

groundandwater.co.uk

FIGURES

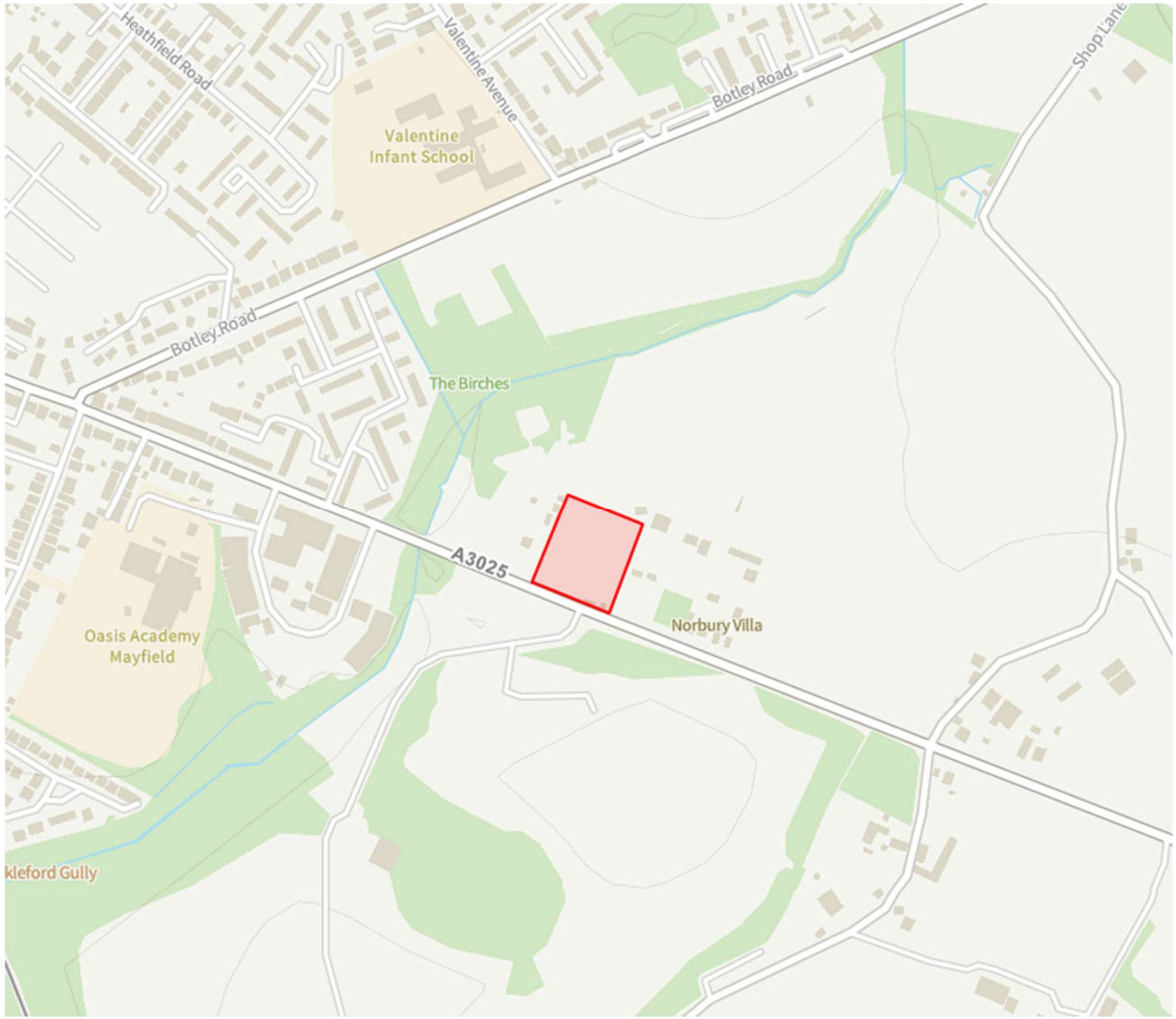

Site boundary

Not to Scale

Sholing Football Club, Portsmouth Road, Southampton, SO19 9PW	
Cowan Consultancy Ltd	**April 2026**
Figure 1: Site Location Plan	**GWPR6989**

ground&water

Site boundary

Machine Excavated Trial Pit for Soakage Testing

Windowless Sampler Borehole

Machine Excavated Trial Pit for Percolation Testing

Sholing Football Club, Portsmouth Road, Southampton, SO19 9PW	
Cowan Consultancy Ltd	**April 2026**
Figure 2 – Trial Hole Location Plan	**GWPR6989**

ground&water

2 The Long Barn,
Norton Farm, Selborne Road,
Alton, Hampshire GU34 3NB

0333 600 1221
enquiries@groundandwater.co.uk

groundandwater.co.uk

APPENDIX A: Conditions and Limitations

ground&water

2 The Long Barn,
Norton Farm, Selborne Road,
Alton, Hampshire GU34 3NB

0333 600 1221
enquiries@groundandwater.co.uk

groundandwater.co.uk

The ground is a product of continuing natural and artificial processes. As a result, the ground will exhibit a variety of characteristics that vary from place to place across a site, and also with time. Whilst a ground investigation will mitigate to a greater or lesser degree against the resulting risk from variation, the risks cannot be eliminated.

The report has been prepared on the basis of information, data and materials which were available at the time of writing. Accordingly, any conclusions, opinions or judgements made in the report should not be regarded as definitive or relied upon to the exclusion of other information, opinions and judgements.

The investigation, interpretations, and recommendations given in this report were prepared for the sole benefit of the client in accordance with their brief; as such these do not necessarily address all aspects of ground behaviour at the site. No liability is accepted for any reliance placed on it by others unless specifically agreed in writing.

Any decisions made by you, or by any organisation, agency or person who has read, received or been provided with information contained in the report ("you" or "the Recipient") are decisions of the Recipient and we will not make, or be deemed to make, any decisions on behalf of any Recipient. We will not be liable for the consequences of any such decisions.

Current regulations and good practice were used in the preparation of this report. An appropriately qualified person must review the recommendations given in this report at the time of preparation of the scheme design to ensure that any recommendations given remain valid in light of changes in regulation and practice, or additional information obtained regarding the site.

Any Recipient must take into account any other factors apart from the Report of which they and their experts and advisers are or should be aware. The information, data, conclusions, opinions and judgements set out in the report may relate to certain contexts and may not be suitable in other contexts. It is your responsibility to ensure that you do not use the information we provide in the wrong context.

This report is based on readily available geological records, the recorded physical investigation, the strata observed in the works, together with the results of completed site and laboratory tests. Whilst skill and care has been taken to interpret these conditions likely between or below investigation points, the possibility of other characteristics not revealed cannot be discounted, for which no liability can be accepted. The impact of our assessment on other aspects of the development required evaluation by other involved parties.

The opinions expressed cannot be absolute due to the limitations of time and resources within the context of the agreed brief and the possibility of unrecorded previous in ground activities. The ground conditions have been sampled or monitored in recorded locations and tests for some of the more common chemicals generally expected. Other concentrations of types of chemicals may exist. It was not part of the scope of this report to comment on environment/contaminated land considerations.

The conclusions and recommendations relate to Sholing Football Club, Portsmouth Road, Southampton, SO19 9PW.

Trial hole is a generic term used to describe a method of direct investigation. The term trial pit, borehole or window sampler borehole implies the specific technique used to produce a trial hole.

2 The Long Barn,
Norton Farm, Selborne Road,
Alton, Hampshire GU34 3NB

0333 600 1221
enquiries@groundandwater.co.uk

groundandwater.co.uk

The depth to roots and/or of desiccation may vary from that found during the investigation. The client is responsible for establishing the depth to roots and/or of desiccation on a plot-by-plot basis prior to the construction of foundations. Where trees are mentioned in the text this means existing trees, recently removed trees (approximately 15 years to full recovery on cohesive soils) and those planned as part of the site landscaping.

Ownership of copyright of all printed material including reports, laboratory test results, trial pit and borehole log sheets, including drillers log sheets, remain with Ground and Water Limited. Licence is for the sole use of the client and may not be assigned, transferred or given to a third party.

Only our client may rely on this report and should this report or any information contained in it be provided to any third party we accept no responsibility to the third party for the contents of this report save to the extent expressly outlined by us in writing in a reliance letter addressed from us to the third party.

Recipients are not permitted to publish this report outside of their organisation without our express written consent.

The aim of the investigation was understood to be to supply the client and their designers with information regarding the ground conditions underlying the site to assist them in preparing an appropriate scheme for development.

2 The Long Barn,
Norton Farm, Selborne Road,
Alton, Hampshire GU34 3NB

0333 600 1221
enquiries@groundandwater.co.uk

groundandwater.co.uk

APPENDIX B: Technical Glossary

TECHNICAL GLOSSARY

The list of possible definitions within the report may be seen below. Please note that some definitions may not be relevant to this report.

HYDROGEOLOGY:

A **Principal Aquifer** is a layer of rock or drift deposits that have high intergranular and/or fracture permeability - meaning they usually provide a high level of water storage. They may support water supply and/or river base flow on a strategic scale. In most cases, principal aquifers are aquifers previously designated as major aquifer.

Secondary (A) Aquifers consist of deposits with permeable layers capable of supporting water supplies at a local rather than strategic scale, and in some cases forming an important source of base flow to rivers. These are generally aquifers formerly classified as Minor Aquifers.

Secondary (B) Aquifers consist of deposits with predominantly lower permeability layers with may stoke and yield limited amounts of groundwater due to localised features such as fissures, think permeable horizons and weathering. These are generally the water-bearing parts of the former non-aquifers.

Secondary Aquifers (Undifferentiated) are assigned in cases where it has not been possible to attribute either category A or B to a rock type. In most cases, this means that the layer in question has previously been designated as both a minor aquifer and non-aquifer in different locations due to the variable characteristics of the rock type.

Unproductive Strata are rock layers with low permeability that have negligible significance for water supply or river base flow. These were formerly classified as non-aquifers.

FLOOD ZONES:

Environment Agency Flood Zone 2, defined as; land having between a 1 in 100 and 1 in 1,000 annual probability of river flooding; or land having between a 1 in 200 and 1 in 1,000 annual probability of sea flooding.

Environment Agency Flood Zone 3 shows the extent of a river flood with a 1 in 100 (1%0 or greater chance of occurring in any year or a sea flood with a 1 in 200 (0.5%) or greater chance of occurring in any year.

Environment Agency Flood Zone 3 area that benefits from flood defences, defined as; land and property in this flood zone would have a high probability of flooding without the local flood defences. These protect the area against a river flood with a 1% chance of happening each year, or a flood from the sea with a 0.5% chance of happening each year.

GROUNDWATER SOURCE PROTECTION ZONES (SPZS):

Inner Zone (SPZ1): This zone is 50 day travel time of pollutant to source with a 50 metres default minimum radius.

Outer Zone (SPZ2): This zone is 400 day travel time of pollutant to source. This has a 250 or 500 metres minimum radius around the source depending on the amount of water taken.

Total Catchment (SPZ3): This is the area around a supply source within which all the groundwater ends up at the abstraction point. This is the point from where the water is taken. This could extend some distance from the source point.

Zone of Special Interest (SPZ4): This zone is where local conditions require additional protection.

IN-SITU STRENGTH GEOTECHNICAL TESTING:

Windowless Sample and/or Cable Percussion and/or Rotary Boreholes provide samples of the ground for assessment but they do not give any engineering data. The standard penetration test (SPT) is an in-situ dynamic penetration test designed to provide information on the geotechnical engineering properties of soil. The test uses a thick-walled sample tube, with an outside diameter of 50mm and an inside diameter of 35mm, and a length of around 650mm. This is driven into the ground at the bottom of a borehole by blows from a slide hammer with a weight of 63.5kg falling through a distance of 760mm. The sample tube is driven 150mm into the ground and then the number of blows needed for the tube to penetrate each 75mm up to a depth of 450mm is recorded. The sum of the number of blows is termed the "standard penetration resistance" or the "N-value".

Dynamic Probing involves the driving of a metal cone into the ground via a series of steel rods. These rods are driven from the surface by a hammer system that lifts and drops a 63.5kg (SHDP) hammer onto the top of the rods through a set height, thus ensuring a consistent energy input. The number of hammer blows that are required to drive the cone down by each 100mm increment are recorded. These blow counts then provide a comparative assessment from which correlations have been published, based on dynamic energy, which permits engineering parameters to be generated. (The Dynamic Probe 'Super Heavy' (SHDP) Tests were conducted in accordance with BS 1377; 1990; Part 9, Clause 3.2).

2 The Long Barn,
Norton Farm, Selborne Road,
Alton, Hampshire GU34 3NB

0333 600 1221
enquiries@groundandwater.co.uk

groundandwater.co.uk

APPENDIX C: Trial Hole Logs

Trial Pit Log

Project Name: Sholing Football Club	Client: Cowan Consultancy Ltd	Date: 11/03/2026
Location: Portsmouth Road, Southampton, SO19 9PW	Contractor: AB SI	
Project No. : GWPR6989	Crew Name:	Equipment: 3 Tonne Machine Excavator

Location Number	Location Type	Level	Logged By	Scale	Page Number
PP1	TP		JN	1:25	Sheet 1 of 1

Well	Water Strikes	Sample and In Situ Testing: Depth (m)	Type	Results	Depth (m)	Level (m)	Legend	Stratum Description
		0.20	D					TOPSOIL: Dark brown slightly gravelly fine to coarse grained SAND. Gravel is sub-angular to sub-rounded fine to medium flint.
					0.40			Orangish brown slightly clayey slightly gravelly fine to coarse grained SAND. Gravel is sub-angular to sub-rounded fine to medium flint. (RIVER TERRACE DEPOSITS).
		0.50	D					
		0.80	D		0.80			End of Borehole at 0.800m

1
2
3
4
5

Dimensions		Trench Support and Comment			Pumping Data		
Pit Length	Pit Width	Pit Stability	Shoring Used	Remarks	Date	Rate	Remarks

Remarks

Percolation Pit completed to 0.80m bgl.
Roots noted to 0.20m bgl.
Groundwater not noted.

Trial Pit Log

Project Name: Sholing Football Club	Client: Cowan Consultancy Ltd	Date: 11/03/2026
Location: Portsmouth Road, Southampton, SO19 9PW	Contractor: AB SI	
Project No. : GWPR6989	Crew Name:	Equipment: 3 Tonne Machine Excavator

Location Number	Location Type	Level	Logged By	Scale	Page Number
PP2	TP		JN	1:25	Sheet 1 of 1

Well	Water Strikes	Sample and In Situ Testing: Depth (m)	Type	Results	Depth (m)	Level (m)	Legend	Stratum Description
		0.20	D		0.30			TOPSOIL: Dark brown slightly gravelly fine to coarse grained SAND. Gravel is sub-angular to sub-rounded fine to medium flint.
		0.50	D					Light brown to yellowish brown mottled sandy GRAVEL of sub-angular to sub-rounded fine to coarse flint. Sand is fine to coarse grained. (RIVER TERRACE DEPOSITS).
		0.80	D		0.80			End of Borehole at 0.800m

1
2
3
4
5

Dimensions		Trench Support and Comment			Pumping Data		
Pit Length	Pit Width	Pit Stability	Shoring Used	Remarks	Date	Rate	Remarks

Remarks

Percolation Pit completed to 0.80m bgl.
Roots noted to 0.20m bgl.
Groundwater not noted.

Trial Pit Log

Project Name: Sholing Football Club	Client: Cowan Consultancy Ltd	Date: 11/03/2026
Location: Portsmouth Road, Southampton, SO19 9PW	Contractor: AB SI	
Project No. : GWPR6989	Crew Name:	Equipment: 3 Tonne Machine Excavator

Location Number	Location Type	Level	Logged By	Scale	Page Number
PP3	TP		JN	1:25	Sheet 1 of 1

Well	Water Strikes	Sample and In Situ Testing: Depth (m)	Type	Results	Depth (m)	Level (m)	Legend	Stratum Description
		0.20	D		0.30			TOPSOIL: Dark brown slightly gravelly fine to coarse grained SAND. Gravel is sub-angular to sub-rounded fine to medium flint.
		0.50	D					Orangish brown slightly clayey slightly gravelly fine to coarse grained SAND. Gravel is sub-angular to sub-rounded fine to medium flint. (RIVER TERRACE DEPOSITS).
	▼	0.80	D		0.80			End of Borehole at 0.800m

1
2
3
4
5

Dimensions		Trench Support and Comment			Pumping Data		
Pit Length	Pit Width	Pit Stability	Shoring Used	Remarks	Date	Rate	Remarks

Remarks

Percolation Pit completed to 0.80m bgl.
Roots noted to 0.20m bgl.
Groundwater struck at 0.80m bgl.

Trial Pit Log

Project Name: Sholing Football Club	Client: Cowan Consultancy Ltd	Date: 11/03/2026
Location: Portsmouth Road, Southampton, SO19 9PW	Contractor: AB SI	
Project No. : GWPR6989	Crew Name:	Equipment: 3 Tonne Machine Excavator

Location Number	Location Type	Level	Logged By	Scale	Page Number
TP1	TP		JN	1:25	Sheet 1 of 1

Well	Water Strikes	Sample and In Situ Testing: Depth (m)	Type	Results	Depth (m)	Level (m)	Legend	Stratum Description
		0.20	D					TOPSOIL: Dark brown slightly gravelly fine to coarse grained SAND. Gravel is sub-angular to sub-rounded fine to medium flint.
		0.50	D		0.60			
		0.80	D					Light brown slightly sandy GRAVEL of sub-angular to sub-rounded fine to coarse flint. Sand is fine to coarse grained. (RIVER TERRACE DEPOSITS).
		1.00	D					
		1.50	D					
	▼	2.00	D		2.05			
								End of Borehole at 2.050m

1 2 3 4 5

Dimensions		Trench Support and Comment			Pumping Data		
Pit Length	Pit Width	Pit Stability	Shoring Used	Remarks	Date	Rate	Remarks

Remarks

Trial Pit completed to 2.05m bgl.
Roots noted to 0.20m bgl.
Groundwater struck at 2.05m bgl.

Trial Pit Log

Project Name: Sholing Football Club	Client: Cowan Consultancy Ltd	Date: 11/03/2026
Location: Portsmouth Road, Southampton, SO19 9PW	Contractor: AB SI	
Project No. : GWPR6989	Crew Name:	Equipment: 3 Tonne Machine Excavator

Location Number	Location Type	Level	Logged By	Scale	Page Number
TP2	TP		JN	1:25	Sheet 1 of 1

Well	Water Strikes	Sample and In Situ Testing: Depth (m)	Type	Results	Depth (m)	Level (m)	Legend	Stratum Description
		0.20	D					TOPSOIL: Dark brown slightly gravelly fine to coarse grained SAND. Gravel is sub-angular to sub-rounded fine to medium flint.
		0.50	D		0.40			Orangish brown to brownish grey mottled slightly gravelly fine to coarse grained SAND. Gravel is sub-angular to sub-rounded fine to medium flint. (RIVER TERRACE DEPOSITS).
		0.80	D		0.70			Orangish brown slightly gravelly fine to coarse grained SAND. Gravel is sub-angular to sub-rounded fine to coarse flint. (RIVER TERRACE DEPOSITS).
		1.00	D					
		1.50	D					
	▼	2.00	D		2.00			End of Borehole at 2.000m

1 2 3 4 5

Dimensions		Trench Support and Comment			Pumping Data		
Pit Length	Pit Width	Pit Stability	Shoring Used	Remarks	Date	Rate	Remarks

Remarks

Trial Pit completed to 2.00m bgl.
Roots noted to 0.40m bgl.
Groundwater struck at 2.00m bgl.

Trial Pit Log

Project Name: Sholing Football Club	Client: Cowan Consultancy Ltd	Date: 11/03/2026
Location: Portsmouth Road, Southampton, SO19 9PW	Contractor: AB SI	
Project No. : GWPR6989	Crew Name:	Equipment: 3 Tonne Machine Excavator

Location Number	Location Type	Level	Logged By	Scale	Page Number
TP3	TP		JN	1:25	Sheet 1 of 1

Well	Water Strikes	Sample and In Situ Testing: Depth (m)	Type	Results	Depth (m)	Level (m)	Legend	Stratum Description
		0.20	D		0.30			TOPSOIL: Dark brown slightly gravelly fine to coarse grained SAND. Gravel is sub-angular to sub-rounded fine to medium flint.
		0.50	D					Light brown slightly sandy GRAVEL of sub-angular to sub-rounded fine to coarse flint. Sand is fine to coarse grained. (RIVER TERRACE DEPOSITS).
		0.80	D					
		1.00	D					
	▼	1.50	D		1.60			End of Borehole at 1.600m

1 2 3 4 5

Dimensions		Trench Support and Comment			Pumping Data		
Pit Length	Pit Width	Pit Stability	Shoring Used	Remarks	Date	Rate	Remarks

Remarks

Trial Pit completed to 1.60m bgl.
Roots noted to 0.40m bgl.
Groundwater struck at 1.60m bgl.

Percussion Drilling Log

Project Name: Sholing Football Club	Client: Cowan Consultancy Ltd	Date: 11/03/2026
Location: Portsmouth Road, Southampton, SO19 9PW	Contractor: AB SI	
Project No. : GWPR6989	Crew Name: AB SI	Drilling Equipment: Archway Dart

Borehole Number	Hole Type	Level	Logged By	Scale	Page Number
WS1	WLS		JN	1:50	Sheet 1 of 1

Well	Water Strikes	Sample and In Situ Testing			Depth (m)	Level (m)	Legend	Stratum Description
		Depth (m)	Type	Results				
		0.20	D					TOPSOIL: Dark brown slightly gravelly fine grained SAND. Gravel is sub-angular to sub-rounded fine to medium flint.
		0.50	D		0.50			Brown to orangish brown mottled slightly sandy GRAVEL of sub-angular to sub-rounded fine to coarse flint. Sand is fine to coarse grained. (RIVER TERRACE DEPOSITS).
		0.80	D					
		1.00	D		1.00			
		1.00	SPT	50 (13,15/50 for 10mm)				

End of Borehole at 1.000m

1 2 3 4 5 6 7 8 9 10

Hole Diameter		Casing Diameter		Chiselling				Inclination and Orientation			
Depth Base	Diameter	Depth Base	Diameter	Depth Top	Depth Base	Duration	Tool	Depth Top	Depth Base	Inclination	Orientation

Remarks

Windowless Sampler Borehole completed to 1.00m bgl.
Roots noted to 0.20m bgl.
Groundwater not noted.

Percussion Drilling Log

Project Name: Sholing Football Club	Client: Cowan Consultancy Ltd	Date: 11/03/2026
Location: Portsmouth Road, Southampton, SO19 9PW	Contractor: AB SI	
Project No. : GWPR6989	Crew Name: AB SI	Drilling Equipment: Archway Dart

Borehole Number	Hole Type	Level	Logged By	Scale	Page Number
WS2	WLS		JN	1:50	Sheet 1 of 1

Well	Water Strikes	Sample and In Situ Testing: Depth (m)	Type	Results	Depth (m)	Level (m)	Legend	Stratum Description
		0.20	D		0.40			TOPSOIL: Dark brown slightly gravelly fine grained SAND. Gravel is sub-angular to sub-rounded fine to medium flint.
		0.50	D					Light brown to yellowish brown mottled sandy GRAVEL of sub-angular to sub-rounded fine to coarse flint. Sand is fine to coarse grained. (RIVER TERRACE DEPOSITS).
		0.80	D					
		1.00	D					
		1.00	SPT	N=13 (4,3/3,3,3,4)				
		1.50	D					
		1.60	SPT	N=65 (14,18/15,16,16,18)	1.60			End of Borehole at 1.600m

Hole Diameter		Casing Diameter		Chiselling				Inclination and Orientation			
Depth Base	Diameter	Depth Base	Diameter	Depth Top	Depth Base	Duration	Tool	Depth Top	Depth Base	Inclination	Orientation

Remarks

Windowless Sampler Borehole completed to 1.60m bgl.
Roots noted to 0.20m bgl.
Groundwater not noted.

Percussion Drilling Log

Project Name: Sholing Football Club	Client: Cowan Consultancy Ltd	Date: 11/03/2026
Location: Portsmouth Road, Southampton, SO19 9PW	Contractor: AB SI	
Project No. : GWPR6989	Crew Name: AB SI	Drilling Equipment: Archway Dart

Borehole Number	Hole Type	Level	Logged By	Scale	Page Number
WS3	WLS		JN	1:50	Sheet 1 of 1

Well	Water Strikes	Sample and In Situ Testing: Depth (m)	Type	Results	Depth (m)	Level (m)	Legend	Stratum Description
		0.20	D					TOPSOIL: Dark brown slightly gravelly fine grained SAND. Gravel is sub-angular to sub-rounded fine to medium flint.
		0.50	D					
		0.80	D		0.70			
		1.00	D		1.00			Light brown to yellowish brown mottled sandy GRAVEL of sub-angular to sub-rounded fine to coarse flint. Sand is fine to coarse grained. (RIVER TERRACE DEPOSITS).
		1.00	SPT	N=68 (6,14/16,16,18,18)				
								End of Borehole at 1.000m

Hole Diameter		Casing Diameter		Chiselling				Inclination and Orientation			
Depth Base	Diameter	Depth Base	Diameter	Depth Top	Depth Base	Duration	Tool	Depth Top	Depth Base	Inclination	Orientation

Remarks

Windowless Sampler Borehole completed to 1.00m bgl.
Roots noted to 0.20m bgl.
Groundwater struck at 0.80m bgl.

Percussion Drilling Log

Project Name: Sholing Football Club	Client: Cowan Consultancy Ltd	Date: 11/03/2026
Location: Portsmouth Road, Southampton, SO19 9PW	Contractor: AB SI	
Project No. : GWPR6989	Crew Name: AB SI	Drilling Equipment: Archway Dart

Borehole Number	Hole Type	Level	Logged By	Scale	Page Number
WS4	WLS		JN	1:50	Sheet 1 of 1

Well	Water Strikes	Sample and In Situ Testing: Depth (m)	Type	Results	Depth (m)	Level (m)	Legend	Stratum Description
		0.20	D		0.30			TOPSOIL: Dark brown slightly gravelly fine grained SAND. Gravel is sub-angular to sub-rounded fine to medium flint.
		0.50	D					Light brown slightly sandy GRAVEL of sub-angular to sub-rounded fine to coarse flint. Sand is fine to coarse grained. (RIVER TERRACE DEPOSITS).
		0.80	D					
		1.00	D		1.00			End of Borehole at 1.000m
		1.00	SPT	N=64 (7,8/12,14,18,20)				

Hole Diameter		Casing Diameter		Chiselling				Inclination and Orientation			
Depth Base	Diameter	Depth Base	Diameter	Depth Top	Depth Base	Duration	Tool	Depth Top	Depth Base	Inclination	Orientation

Remarks

Windowless Sampler Borehole completed to 1.00m bgl.
Roots noted to 0.20m bgl.
Groundwater not noted.