ecourban ARBORICULTURAL

Arboricultural Implications Assessment and Method Statement for Sholing Football Club, Portsmouth Road, Southampton

Arboricultural Implications Assessment and Method Statement

Sholing Football Club, Portsmouth Road, Southampton

Produced by:

Barrie Draper BSc (Hons) Arb TechCert(ArborA) CertArb(RFS)

Arboricultural Consultant

Report Ref: **251703 - AIA 3**

Report Date: **17 April 2026**

No.	Title	Page
1	Introduction	3
2	Site Visit, Description and Work Methodology	5
3	Arboricultural Implications Assessment	8
4	Summary of the implications of the development on trees	11
5	Arboricultural Method Statement	12
Appendix 1	Tree Protection Plan	14
Appendix 2	Tree schedule and inventory	15
Appendix 3	Illustrative specification for tree protection barriers	20
Appendix 4	BS 5837:2012 – Assessment categories	21
Appendix 5	Qualifications and experience of Barrie Draper	22

1 INTRODUCTION

1.1 **Instruction:** I am instructed by Sholing Football Club to report on trees which could be affected by a development proposal at Sholing Football Club, Portsmouth Road, Southampton and prepare an Arboricultural Implications Assessment (AIA) and Arboricultural Method Statement (AMS) to support a planning application on the site.

1.2 **Document disclosure:** Initially, I was provided with a topographical survey (drawing reference 'Sholing Football Club - Survey'). This showed the positions of the significant trees/hedges on or near the site, together with any existing or nearby buildings and any other important site features. Subsequently, I was supplied with a copy of the proposed layout, (drawing reference '8374 D101 Proposed Site Plan') showing a new site configuration. I was also provided with a drainage layout (drawing reference '424686-201P1').

1.3 **Scope of report:** All my tree observations are of a preliminary nature, with the tree survey carried out from ground level without any investigations using invasive or diagnostic equipment. I was not able to fully view all the trees detailed in this report from all directions, as some were located on adjacent private property. I have therefore confined observations of these trees to what was visible from within the site. I have not checked the accuracy of the positions of the trees shown on the provided plans and I have estimated all dimensions unless otherwise indicated.

1.4 **The Tree Protection Plan**: This is included in Appendix 1 and is a composite drawing derived from the information provided. It shows the existing landscape features (from the land survey) in grey superimposed over the proposed drainage scheme for the site. This allows the relationship between the proposed and existing configurations to be clearly seen and an appropriate analysis of the implications of the site changes to be undertaken. The Tree Protection Plan has also been annotated to show protection measures for any retained trees which could realistically be affected by the proposed development. It shows any activities in Root Protection Areas (RPAs) and if any trees are to be removed, they are shown with a red dashed crown outline.

1.5 **Qualifications and experience:** This report is based on my site observations and I have come to my conclusions in the context of my experience as a former local government tree officer and a private practice arboricultural consultant. I have qualifications in both arboriculture and forestry and details of these, together with a career summary are provided in Appendix 5.

1.6 **Relevant background information:** This report is an updated version of an earlier document (**eco**urban reference '251703 - AIA') which has been revised following the provision of a drainage layout for the project and the retention of the existing septic tank and trees around its location.

2 SITE VISIT, DESCRIPTIONS AND SURVEY METHODOLOGY

2.1 **Site visit and description:** I visited the site on 16 December 2025 to gather my tree data. Sholing Football Club is located in Portsmouth Road, which is situated in the suburbs of the city of Southampton. It is positioned on the northern side of the road and consists of a sports stadium with ancillary buildings, with car parking to the south and additional sports pitches and a bowling green to the north, south and west. An access drive into the site from the main road to the south leads to the stadium car parking and the drive has a number of trees located to the west of its position. Additional trees and hedges are located on (or close to the site) and the majority of these are located around its periphery. However, no trees are located immediately adjacent to the stadium itself, as referenced in photograph 1 below.

Photograph 1: View of the stadium perimeter from the south west

2.2 **Description of proposed development:** This development proposal is to construct six new padel tennis courts and a club house building on the site.

2.3 **Soil assessment:** British Standard (BS) 5837:2012 Trees in relation to design, demolition and construction – Recommendations advocates that a soil assessment should be carried out to inform decisions relating to Root Protection Areas (RPAs), tree protection, new planting and foundation design. I have consulted the British Geological Survey (BGS) website and their Geology Viewer and this advises that the bedrock geology for the site is Earnley Sand Formation-Sand, silt and clay. I did not undertake any excavations on site to confirm this and a full geotechnical site investigation may need to be undertaken to provide a more in-depth level of information regarding soil type for the site.

2.4 **Tree survey methodology:** My inspection of the trees was visual and did not involve any climbing or exploratory investigations. During my visit, I identified obvious groups where appropriate and I assigned an identification number to each, as shown on the plan in Appendix 1. Tree stem diameters are also indicated on the Tree Protection Plan and for certain trees assessed as a group feature, I may have assigned an additional number to the main group figure (e.g., G1-1) to help aid identification. I then collected the tree data included in Appendix 2 and placed the vegetation in one of four categories (U, A, B or C), as set out in BS 5837:2012. I have included the BS categorisations in Appendix 4 for easy reference.

2.5 **Tree data collection:** As discussed, some of the trees included in this report were located offsite and on land to which I was not entitled to access. I have therefore estimated tree dimensions in accordance with the guidance set out in section 4.4.2.6 C of BS 5837:2012. Where of relevance, I also estimated the crown spreads for each tree/group at the appropriate cardinal compass points and this information is also shown in the tree schedule in Appendix 2. Although this document is not a full and detailed report on tree health and safety, any significant visible structural defects or physiological conditions identified, together with preliminary tree works, are also noted in the appropriate columns in the tree schedule. However, this report is not a tree condition survey and a full post development tree inspection is recommended to establish that the trees retained pose acceptable levels of risk once the development has been completed.

2.6 **Tree survey restrictions:** Some of the trees were located in areas of dense understorey planting and others were covered in ivy. This, together with their close proximity to one another meant that some trees (or parts of trees) were not readily visible from all directions. These restrictions placed some significant limits on the capacity to assess tree condition and also on the use of laser measuring equipment, where clear line of sight is also required. I have therefore relied on an assessment of tree quality based on what was visible from vantage points around the site and provided estimates of tree attributes in such situations.

2.7 **Data interpretation:** The Root Protection Area (RPA) figures are included in Appendix 2. As set out in paragraphs 4.6.2 and 4.6.3 of BS 5837:2012, the RPAs may have been adjusted as a matter of arboricultural judgement to indicate the estimated likely position of important tree roots. These modified (or unmodified) RPAs can then help determine the location of the tree protection barriers and the position of any ground protection measures. Tree protection details are shown on the plan included in Appendix 1. Where there is a need for incursions into RPAs, an assessment of the implications of these activities is set out in Section 3 (Arboricultural Implications Assessment) of this report. Where appropriate, details of suitable work

methodologies to protect trees and also mitigate any impact are set out in Section 5 (Arboricultural Method Statement).

2.8 **Revisions to the provided land survey:** During my site visit, I noted that tree G2-1 was not shown on the provided topographical survey. For completeness, I have therefore illustrated its approximate position on the plan included in Appendix 1.

3 ARBORICULTURAL IMPLICATIONS ASSESSMENT

3.1 **Introduction to the implications of the development proposal on trees:** BS 5837:2012 sets out in some detail how trees on development sites should be managed. It is usually accepted amongst arboriculturists that Category A (high quality) and Category B (moderate quality) trees are potential constraints on any development proposal. Trees and hedges belonging to Category C (low quality) are considered to be generally less important and such vegetation would not normally constrain site development proposals. Any trees/hedges graded Category U are in such poor condition that they are considered unsuitable for retention. This is because they cannot realistically be retained in acceptable condition in respect of the current land use for longer than 10 years. Therefore, these trees would normally have limited importance in the context of a planning application. On this site a total of nine individual trees, groups and hedges were recorded during the tree survey and these were assigned to the BS 5837:2012 categories, as set out in Table 1 below:

Category A and B trees	Category C trees/hedges	Category U trees
A total of two trees/groups and hedges (G6 and T8) were rated Category B	A total of seven trees, groups and hedges (G1, G2, H3. G4, G5, G7 and H9) were rated mainly Category C	Some trees in groups G1 and G7 were also rated Category U

Table 1: Tree numbers and BS categories

I have focussed on the implications of the development proposal mainly on the important trees on or near the site (Category A and B) in terms of tree loss/retention and by the extent of any incursions into and/or disturbance within Root Protection Areas (RPAs). I have also considered the implications for the Category C trees/hedges present. Of the total of nine trees, groups and hedges surveyed, all will be retained and no trees will need to be removed to facilitate this development proposal. No trees will have activities arising from the development occurring within their RPAs. I have summarised the development related implications on trees in Table 2 below and set out the site tree issues in more detail in the following paragraphs.

Trees/hedges to be removed for development		Activities in RPAs arising from the development proposal	
Category A and B	Category C	Category A and B	Category C
None	None	None	None

Table 2: Trees lost and activities in RPAs arising from the development proposal

3.2 **Direct implications of the development proposal – Tree/hedge retention and loss**

3.2.1 **BS Category A, B and C trees to be retained:** All the trees surveyed will be retained and protected in accordance with the guidance set out in BS 5837:2012. Consequently, no trees will need to be removed to facilitate this development proposal.

3.3 **Additional implications arising from the development proposal**

3.3.1 **BS Category A, B and C trees and activities within RPAs:** No trees will have construction related activities occurring within their RPAs. Consequently, no trees are likely to be adversely affected by any development related construction activities within their protected areas.

3.4 **Additional site tree issues**

3.4.1 **BS Category U trees normally removed for management reasons:** As discussed, category U trees are in such poor condition that they are considered unsuitable for retention in the longer term. On this site, I have assessed some trees in groups G1 (tree numbers G1-1 and G1-2) and G7 (tree numbers G7-4 and G7-7) as falling into Category U. However, as these trees do not need to be removed to directly facilitate the development proposal and so are not a direct implication arising from it, I have shown them to be retained in the short term. However, the situation will need ongoing monitoring and these trees will likely need to be removed in due course in order to maintain acceptable levels of risk in respect of current site operations.

3.4.2 **Tree protection during development:** An Arboricultural Method Statement is included in Section 5 and it details the various issues associated with successful tree protection in a development context on this site. If deemed appropriate by the council, this can be specifically referred to in a suitably worded planning condition attached to any subsequently issued planning consent.

4 SUMMARY OF THE IMPLICATIONS OF THE DEVELOPMENT ON TREES

4.1 **Summary:** Of the total of nine trees, groups and hedges surveyed, all will be retained and no trees will need to be removed to facilitate this development proposal. Consequently, provided the tree protection measures set out in this report are realised, then the proposal is acceptable from an arboricultural perspective and the risk of significant implications for any retained trees are likely to be low.

5 ARBORICULTURAL METHOD STATEMENT

5.1 Tree protection issues

5.1.1 **Tree Protection Plan (TPP):** The plan in Appendix 1 is illustrative, but is based on the layout drawings and topographical survey provided. Therefore, all scaled measurements should be checked against the original design documents. The attached plan and all other information in this report should only be used for dealing with the tree protection issues and all other uses are prohibited, unless authorised by **eco**urban ltd. All the existing trees/hedges will have been numbered, with any higher categories (A and B) highlighted in green and blue rectangles and any low categories (C and U) highlighted in grey and red respectively. The plan also shows the locations of the proposed protective measures for trees which could realistically be affected by the proposed site changes. Additionally, any trees to be removed are indicated with a red dashed crown outline. The TPP is an important document and a copy of it should be kept on site for reference during the construction phase of the project.

5.1.2 **Protective barriers:** The approximate location of the barriers is illustrated on the plan in Appendix 1 and information on barrier design based on BS 5837:2012 guidance is included in Appendix 3. The protective barriers will be erected before any materials or machinery are brought onto the site and prior to any clearance or construction activities occurring. Once the protective barriers have been positioned, these will stay in situ for the duration of the construction phase, unless previously agreed with the project arboricultural consultant or council's tree officer. There will be no access into the protected areas and the storage of excavated debris and building materials will be prohibited in RPAs, unless authorised by the project arboricultural consultant, after discussion with the council's tree officer. No fires or fuel storage will be allowed within or near to protected areas under any circumstances.

5.2 Additional tree-related issues

5.2.1 **Site supervision:** Site personnel will be properly briefed regarding the tree protection issues before any work starts and the tree protection will be inspected periodically to ensure the retained trees are protected in accordance with this document and any conditions imposed by the council.

5.2.2 **Material storage areas and site compounds:** All construction material storage areas, cement silos or cement mixing areas, fuel storage points and compounds for machinery etc. will be outside protected areas, unless otherwise agreed with the council.

5.2.3 **Site offices, welfare facilities and contractor's car parking:** Whilst it is possible to have site offices and welfare facilities within RPAs, care is needed in their positioning and also in the connection of water, electricity and drainage to service them. Therefore, these will generally be sited outside the tree RPAs, unless agreed previously with the council. Contractor's car parking facilities will also be located away from retained trees.

5.2.4 **Tree works:** Any tree pruning or tree removal operations are set out in the tree schedule included in Appendix 2. Additionally, any trees scheduled for removal are also shown on the Tree Protection Plan included in Appendix 1.

5.2.5 **Planning, communication and preliminary timing of events:** It is not unusual for the details of timing of operations which could impact on important trees to only be finalised once planning consent has been given. Site managers, clearance and construction teams and other important personnel are normally only appointed at this stage and it is these people who will be crucial in delivering the tree protection detailed in this report. My experience is that the pre commencement site meeting is critical in terms of avoiding damage to trees and this particular aspect, along with tree protection issues can be specifically referenced in a suitably worded planning condition imposed by the council. In the intervening time, I propose the following preliminary cascading timetable of events to help minimise the risk of impact on important trees. However, the following schedule may be modified at the pre-commencement meeting, subject to discussion with all parties and agreement with the council:

1. Pre-commencement site meeting
2. Extent of any arboricultural supervision agreed
3. Protective barriers erected before any clearance or construction activities occur on site and notification to the council that this is in place
4. Tree protection only removed at the end of the construction phase when there is no longer any risk to trees

Barrie Draper BSc (Hons) Arb TechCert(ArborA) CertArb(RFS)
Arboricultural Consultant Date: **17 April 2026**

Appendix 1: Tree Protection Plan

1 A0 plan

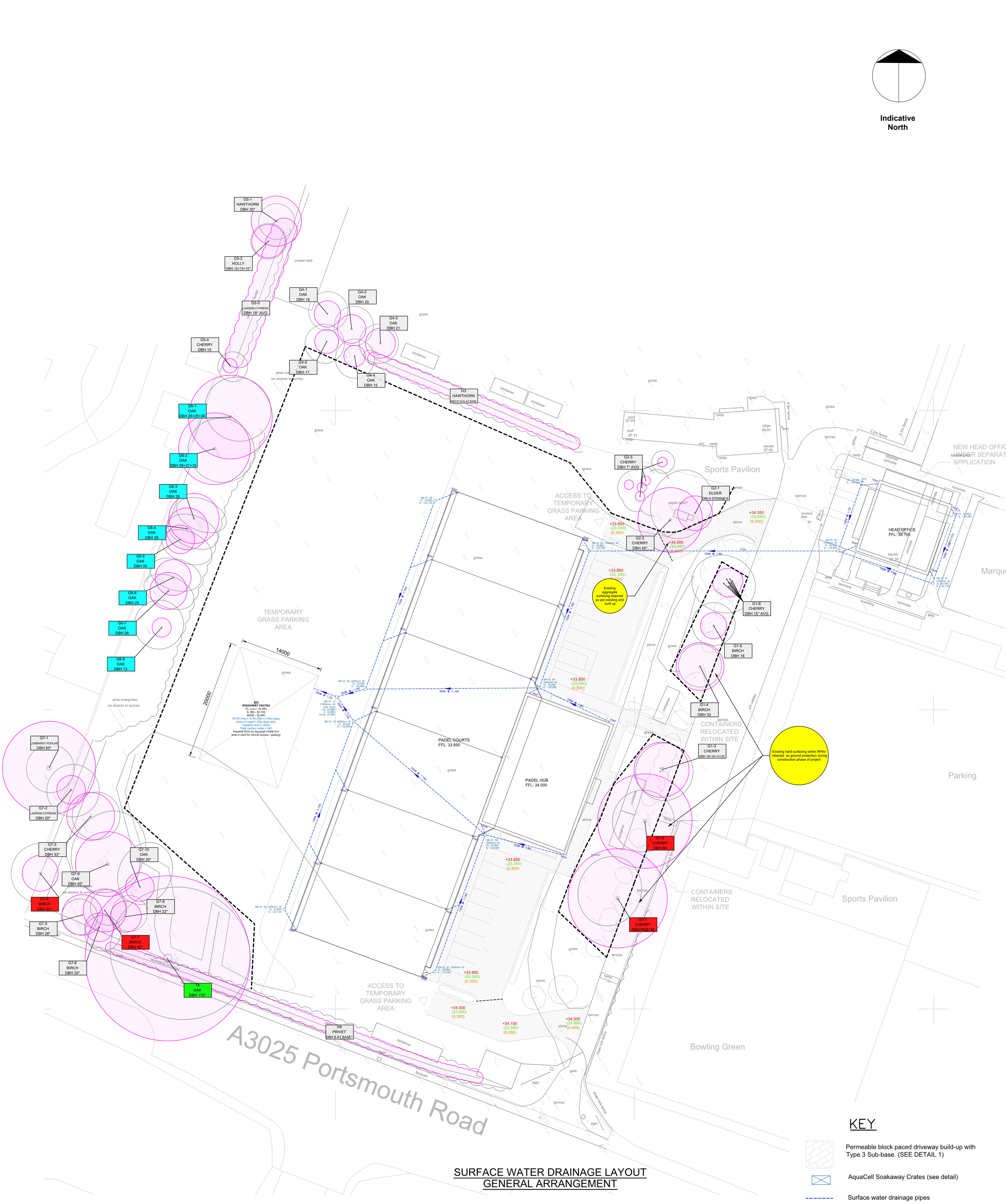

SURFACE WATER DRAINAGE LAYOUT
GENERAL ARRANGEMENT

ecourban ARBORICULTURAL

ECO 4 - TREE PROTECTION FOR SHOLING FOOTBALL CLUB, PORTSMOUTH ROAD, SOUTHAMPTON

SCALE: 1:200 @ A0

COMPOSITE PLAN:
LAND SURVEY OUTLINED IN GREY, PROPOSED DEVELOPMENT SHOWN IN OUTLINE WITH DRAINAGE IN BLUE

This drawing was originally produced in colour, therefore any subsequent monochrome photocopies may not show appropriate levels of detail and should not be relied upon for the purposes of dealing with site tree issues

Tree ID No. Tree species DBH: Diameter (cm) at 1.5m (* indicates estimate) Lgst. = Largest stem diameter in group Avg. = Average stem diameter in group — **BS Category B:** Trees of moderate quality

Tree ID No. Tree species DBH: Diameter (cm) at 1.5m (* indicates estimate) Lgst. = Largest stem diameter in group Avg. = Average stem diameter in group — **BS Category C:** Trees of low quality

Tree ID No. Tree species DBH: Diameter (cm) at 1.5m (* indicates estimate) Lgst. = Largest stem diameter in group Avg. = Average stem diameter in group — **BS Category U:** Trees unsuitable for retention

Tree protection barriers

Root Protection Areas (RPAs): Below ground tree constraints for retained Category B and C trees based on BS 5837 guidance

Trees to be removed to facilitate development

Appendix 2: Tree Schedule and Inventory

Background fill colour represents BS 5837:2012 categories: A Category trees have green backgrounds, B Category trees have light blue backgrounds, C Category trees have grey backgrounds and U Category trees have red backgrounds.

Tree No.	Species	Ht (m)	Single stem dia. at 1.5m (cm)	Est. Dia. *	STEM DIAMETERS (MULTIPLE)								Branch spread (m)				Ht above ground (m)	Age class	Notes	Management proposals	BS cat	RPA area (m²)	RPA radius (m)
					Multi stemmed trees with 1 - 5 stems (cm)					Multi stemmed trees with 1 - 5 stems combined (cm)	Multi stemmed trees >5 stems												
					1	2	3	4	5		Mean stem dia. (cm)	No. of stems	N	E	S	W							
All trees																				Where needed for construction access, crown lift trees by up to 4m over site			
G1	Cherry and birch	9 Avg	69 Lgst	-	-	-	-	-	-	-	-	-	5	3	6	5	3	MA/ M	Linear grouping of trees adjacent to access drive. Cherry trees in particularly poor condition with Bacterial Canker infection and canopy symptoms including dieback indicating declining vitality.		C1 U	215	8.3
G2	Cherry and elder	9 Lgst	45	* Lgst	-	-	-	-	-	-	-	-	6	4	2	6	3	Y/ M	Mature and young/small trees/shrubs adjacent to dilapidated septic tank. Large cherry unbalanced canopy, with main stem covered in ivy, limiting inspection.		C1	92	5.4

Appendix 2: Tree Schedule and Inventory

Tree No.	Species	Ht (m)	Single stem dia. at 1.5m (cm)	Est. Dia. *	STEM DIAMETERS (MULTIPLE)								Branch spread (m)				Ht above ground (m)	Age class	Notes	Management proposals	BS cat	RPA area (m²)	RPA radius (m)
					Multi stemmed trees with 1 - 5 stems (cm)					Multi stemmed trees with 1 - 5 stems combined (cm)	Multi stemmed trees >5 stems												
					1	2	3	4	5		Mean stem dia. (cm)	No. of stems	N	E	S	W							
H3	Hawthorn	3	9 at base	* Avg	-	-	-	-	-	-	-	-	<1	<1	<1	<1	n/a	Y	Clipped hedge.		C1	4	1.1
G4	Oak	8	21 Lgst	-	-	-	-	-	-	-	-	-	3	3	3	3	2	Y	Cluster of young/small trees with similar attributes.		C1	20	2.5
G5	Hawthorn, holly, cherry and Lawson cypress	8 Lgst	35 Lgst	-	-	-	-	-	-	-	-	-	3	3	2	-	n/a	Y/ MA	Linear grouping of boundary trees. Unremarkable.		C2	55	4.2
G6	Oak	13 Lgst	-	* Lgst	39	27	15	-	-	50	-	-	6	6	3	-	3	Y/ MA	Boundary planting.		B2	112	6.0
G7	Birch, cherry, oak, Lombardy poplar and Lawson cypress	25 Lgst	60	* Lgst	-	-	-	-	-	-	-	-	6	2	-	-	3	MA	Cluster of onsite and offsite trees. Some influenced by proximity to one another or otherwise in very poor condition.		C1 /U	163	7.2

Appendix 2: Tree Schedule and Inventory

Tree No.	Species	Ht (m)	Single stem dia. at 1.5m (cm)	Est. Dia. *	STEM DIAMETERS (MULTIPLE)								Branch spread (m)				Ht above ground (m)	Age class	Notes	Management proposals	BS cat	RPA area (m²)	RPA radius (m)
					Multi stemmed trees with 1 - 5 stems (cm)					Multi stemmed trees with 1 - 5 stems combined (cm)	Multi stemmed trees >5 stems												
					1	2	3	4	5		Mean stem dia. (cm)	No. of stems	N	E	S	W							
T8	Oak	19	115	*	-	-	-	-	-	-	-	-	12	12	-	11	4	M	Large prominent tree located adjacent to highway. Localised soil build up around tree base. Ivy main stem, hindering inspection. Overhead service through canopy. Some deadwood in canopy and epicormic on scaffold branches.		A2	598	13.8
H9	Privet	3	8 Avg at base	*	-	-	-	-	-	-	-	-	1	1	-	1	n/a	Y/ MA	Clipped hedge.		C1	3	1.0

Abbreviations:

Abbreviations	Meaning	Abbreviations	Meaning	Abbreviations	Meaning
T	*Individual tree*	**M**	*Mature*	>	*More than*
G	*Groups of trees*	**MA**	*Maturing*	<	*Less than*
H	*Hedge*	**Y**	*Young*	**Lgst**	*Largest tree diameter within group*
W	*Woodland*	**RPA**	*Root Protection Area*	**Avg**	*Average tree diameter within group*

Appendix 2: Tree Schedule and Inventory

Tree Schedule Notes:

Tree number	*Assigned during the site visit and also referenced on the plan in Appendix 1.*
Species	*Common name and referenced to scientific name in the above list. Where I have some doubt over the actual tree species, the genus will have been noted followed by sp. Where trees are numerous and present in groups, not every individual species may have been noted.*
Height	*Measurement of total tree height using a laser hypsometer to nearest metre or where clear line of site is not possible then an estimate based on interpolation of heights of nearby measured trees.*
Stem diameters	*Measurement of stem diameter either at 1.5m above ground (or in accordance with BS guidance where trees have multiple stems) with a forester's girth measuring tape.* ***Diameters followed by asterisk symbol indicate estimated diameters because of access difficulties, presence of ivy or other obstructions.*** *Where trees are present in a group, the tree with the largest stem diameter within the group or average stem diameters only may have been recorded.*
Est. Dia.	*Estimated diameters due to access restrictions are indicated with an asterisk*
Branch spread	*Where appropriate and where ground conditions allow, an estimate of the crown spread at each of the cardinal compass points. Where only part of the site is affected by trees, measurement may be in one or two directions only*
Existing height above ground level	*Distance in metres to first significant branch or canopy or a height above which crown lifting operations would not be appropriate*
Age class	*Simplistic estimate of tree age in one of FOUR categories (young, maturing, mature or over mature).*
Notes	*Although this document is not intended to be a full and detailed report on tree health and safety, any significant structural defects or physiological conditions have been identified where these were visible. Where no entries are recorded, this indicates no observable issues were identified. Where there is restricted access to the base of a tree, its attributes are assessed from the nearest point of access. Climbing inspections are not carried out during a walkover tree survey and, if heavy ivy is present, tree condition is assessed from what can be seen from the ground.*

Appendix 2: Tree Schedule and Inventory

Management proposals	*The inspection of all trees was of a preliminary nature and only defects visible from the ground have been identified. Each individual tree may not have been inspected closely because of access difficulties and only defects visible from the inspection point have been identified. Monitoring may be indicated where tree risk can be adequately managed by increased frequency of site inspections. Further investigation may be indicated where additional data may be required beyond a purely visual assessment. However, a full post development tree inspection is recommended to establish that the trees retained during construction pose acceptable levels of risk once the development has been completed.*
BS 5837 :2012 Category	*Either U, A, B or C based on the BS 5837:2012 guidance.*
RPA and RPA radius	*RPA and RPA radius calculations have been undertaken in accordance with the guidance set out in BS 5837:2012.*

Tree Inventory:

Common Tree Names	Scientific Tree Names		Common Tree Names	Scientific Tree Names
Birch	*Betula pendula / pubescens*		Lawson cypress	*Chamaecyparis lawsoniana*
Cherry	*Prunus* sp.		Lombardy poplar	*Populus nigra* 'Italica'
Elder	*Sambucus nigra*		Oak	*Quercus robur*
Hawthorn	*Crataegus monogyna*		Privet	*Ligustrum ovalifolium*
Holly	*Ilex aquifolium*			

Appendix 3: Illustrative Specification for Tree Protection Barriers

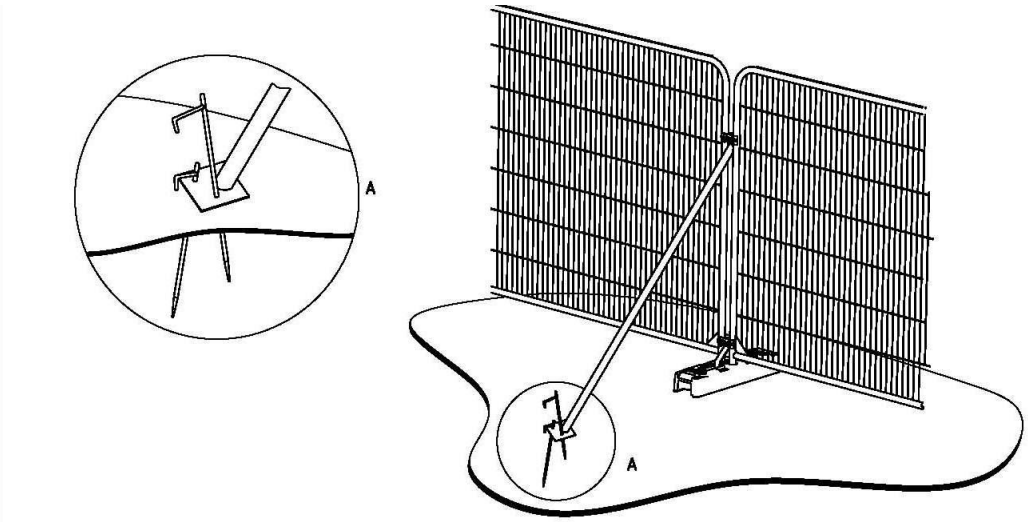

a) Stabilizer strut with base plate secured with ground pins

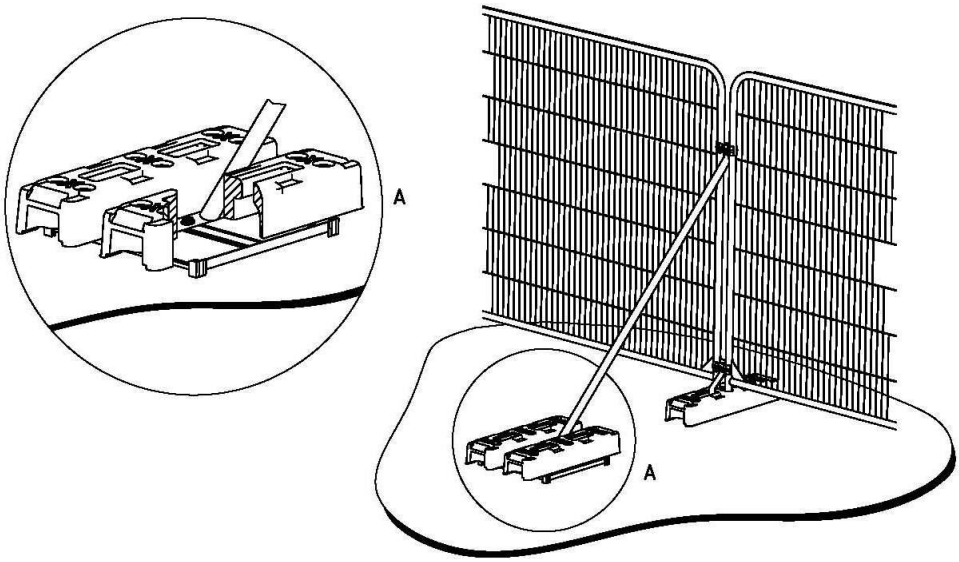

b) Stabilizer strut mounted on block tray

Illustration taken from British Standard 5837:2012 -
Trees in relation to design, demolition and construction – Recommendations.

2m tall welded mesh panels on rubber or concrete feet might provide an adequate level of protection from cars, vans, pedestrians and manually operated plant. In such cases, the fence panels should be joined together using a minimum of two anti-tamper couplers, installed so that they can only be removed from inside the fence. The distance between the fence couplers should be at least 1 m and should be uniform throughout the fence. The panels should be supported on the inner side by stabilizer struts, which should normally be attached to a base plate secured with ground pins
– BS 5837:2012

Ref: Tree Protection Barriers (Type 2)	**Drawing No. TPB2**
Scale: N/A	

Appendix 4: BS 5837:2012 – Assessment Categories

TREES FOR REMOVAL		
Category and definition	**Criteria**	**Identification on plan**
Category U Those in such a condition that they cannot realistically be retained as living trees in the context of the current land use for longer than 10 years	• Trees that have a serious, irremediable, structural defect, such that their early loss is expected due to collapse, including those that will become unviable after removal of other category U trees (e.g. where, for whatever reason, the loss of companion shelter cannot be mitigated by pruning) • Trees that are dead or are showing signs of significant, immediate, and irreversible overall decline • Trees infected with pathogens of significance to the health and/or safety of other trees nearby, or very low quality trees suppressing adjacent trees of better quality *NOTE Category U trees can have existing or potential conservation value which it might be desirable to preserve.*	RED

TREES TO BE CONSIDERED FOR RETENTION				
Category and definition	**Criteria — Subcategories**			**Identification on plan**
	1 Mainly arboricultural qualities	**2 Mainly landscape qualities**	**3 Mainly cultural values, including conservation**	
Category A Trees of high quality with an estimated remaining life expectancy of at least 40 years	Trees that are particularly good examples of their species, especially if rare or unusual; or those that are essential components of groups or formal or semi-formal arboricultural features (e.g. the dominant and/or principal trees within an avenue)	Trees, groups or woodlands of particular visual importance as arboricultural and/or landscape features	Trees, groups or woodlands of significant conservation, historical, commemorative or other value (e.g. veteran trees or wood-pasture)	GREEN
Category B Trees of moderate quality with an estimated remaining life expectancy of at least 20 years	Trees that might be included in category A, but are downgraded because of impaired condition (e.g. presence of significant though remediable defects, including unsympathetic past management and storm damage), such that they are unlikely to be suitable for retention for beyond 40 years; or trees lacking the special quality necessary to merit the category A designation)	Trees present in numbers, usually growing as groups or woodlands, such that they attract a higher collective rating than they might as individuals; or trees occurring as collectives but situated so as to make little visual contribution to the wider locality	Trees with material conservation or other cultural value	BLUE
Category C Trees of low quality with an estimated remaining life expectancy of at least 10 years, or young trees with a stem diameter below 150 m	Unremarkable trees of very limited merit or such impaired condition that they do not qualify in higher categories	Trees present in groups or woodlands, but without this conferring on them significantly greater collective landscape value; and/or trees offering low or only temporary/transient landscape benefits	Trees with no material conservation or other cultural value	GREY

Appendix 5: Qualifications and Experience of Barrie Draper

1 **Qualifications:** I have a BSc degree (with Honours) in Arboriculture from the University of Central Lancashire. I also hold a BTEC Higher National Diploma (HND) in Forestry (Lowland Management), the Arboricultural Association's Technician's Certificate in Arboriculture (Tech Cert), the Royal Forestry Society's Certificate in Arboriculture (Cert Arb) and the National Examinations Board (NEB) Certificate in Forestry.

2 **Career experience:** I began my arboricultural career in 1993 as an arborist with Portsmouth City Council. During my time with the council I worked for both the direct labour organisation and for a private contractor where I obtained valuable hands on experience in all aspects of arboriculture. From 1999 to 2002 I was employed as Senior Arborist by Parchment Housing Group, a housing association based near Portsmouth. I managed the Groups' tree stock on their behalf, carrying out tree inspections and practical management operations. I have also worked in local government, spending time with Thurrock Borough Council in Essex where I was the Tree and Landscape Officer, and with Winchester City Council, where I was Arboricultural Officer for a period of 2 years. During my time working in local government, I was responsible for making Tree Preservation Orders, administering applications to work on protected trees and advising on planning applications when trees were considered potential constraints on development. Working within a planning environment allowed me to gain valuable experience in the management of trees in development situations and an understanding of the planning process and how it relates to trees. From January 2005 I worked for Barrell Tree Consultancy Ltd advising clients on a wide range of tree related issues. I then left the company in September 2008 and set up **eco**urban ltd.

ecourban ltd: Registered in England and Wales No.: 07376860

Registered Office: 12 Millstream, Christchurch Road, Ringwood, Hampshire, BH24 3SE

T: 07532 373 563 E: barrie@eco-urban.co.uk