ecourban ARBORICULTURAL

# Arboricultural Implications Assessment and Method Statement for Land adjacent to the Pear Tree (PH), Winchester Road, Boorley Green

Arboricultural Implications Assessment and Method Statement

**Land adjacent to the Pear Tree (PH), Winchester Road, Boorley Green**

Produced by:

Barrie Draper BSc (Hons) Arb TechCert(ArborA) CertArb(RFS)

**Arboricultural Consultant**

Report Ref: **241627 - AIA 4**

Report Date: **3 June 2026**

| No. | Title | Page |
|---|---|---|
| 1 | Introduction | 3 |
| 2 | Site Visit, Description and Work Methodology | 5 |
| 3 | Arboricultural Implications Assessment | 7 |
| 4 | Summary | 10 |
| 5 | Preliminary Arboricultural Method Statement | 11 |
| Appendix 1 | Tree Protection Plan | 14 |
| Appendix 2 | Tree schedule and inventory | 15 |
| Appendix 3 | Illustrative specification for tree protection barriers | 19 |
| Appendix 4 | BS 5837:2012 – Assessment categories | 20 |
| Appendix 5 | Qualifications and experience of Barrie Draper | 21 |

## 1 INTRODUCTION

1.1 **Instruction:** I am instructed by Vivid Design Studio to report on trees which could be affected by a development proposal for land adjacent to the Pear Tree (PH), Winchester Road, Boorley Green and prepare an Arboricultural Implications Assessment (AIA) and preliminary Arboricultural Method Statement (AMS) to support a planning application on the site.

1.2 **Document disclosure:** Initially, I was provided with a topographical survey (drawing reference '2931 S1 - The Pear Tree [PS]'). This showed the positions of the significant trees/hedges on or near the site, together with any existing or nearby buildings and any other important site features. Subsequently, I was supplied with a copy of the proposed layout, (drawing reference '220047_12C_proposedsiteplan-A1 SHEET') showing a new site configuration.

1.3 **Scope of report:** All my tree observations are of a preliminary nature, with the tree survey carried out from ground level without any investigations using invasive or diagnostic equipment. I have not checked the accuracy of the positions of the trees shown on the provided plans and I have estimated all dimensions unless otherwise indicated.

1.4 **The Tree Protection Plan**: This is included in Appendix 1 and is a composite drawing derived from the information provided. It shows the existing landscape features (from the land survey) in grey superimposed over the proposed development shown in colour. This allows the relationship between the two to be clearly seen and an appropriate analysis of the implications of the proposed site changes to be undertaken. The Tree Protection Plan has also been annotated to show protection measures for any retained trees/hedges which could realistically be affected by the proposed development. It shows any activities in Root Protection Areas (RPAs) and if trees are to be removed, they are shown with a red dashed crown outline.

1.5 **Qualifications and experience:** This report is based on my site observations and I have come to my conclusions in the context of my experience as a former local government tree officer and a private practice arboricultural consultant. I have qualifications in both arboriculture and forestry and details of these, together with a career summary are provided in Appendix 5.

1.6 **Ecological issues and statutory tree protection:** Providing guidance on ecological issues is not within my sphere of expertise. However, trees and other vegetation can often provide nesting, roosting and feeding opportunities for protected species. Therefore, before any tree

work proceeds on site, I advise that appropriate advice is sought to see whether the trees to be removed are being utilised by any protected species. At the time of writing, I have made no checks to ascertain whether any of the trees discussed are covered by tree preservation orders, or if the site is located within a conservation area. Therefore, any person intending to carry out any operations involving trees (before a formal planning consent is issued) should consult the council before any such works are undertaken.

1.7 **Relevant background information:** This report is a new version of an earlier document (**eco**urban reference '241627 – AIA 3') which has been updated following changes to the proposed layout.

## 2 SITE VISIT, DESCRIPTIONS, OBSERVATIONS AND SURVEY METHODOLOGY

2.1 **Site visit and description:** I visited the site on 3 July 2024 to gather my tree data. The site is located in Winchester Road, which is situated in the Hampshire village of Boorley Green. It is positioned on the western side of the road and to the north of the Pear Tree public house and consists of a rectangular piece of land currently under grass and which is used as part of a beer garden for the adjacent public house. A small number of individual trees, tree groups and hedges are located on the site.

2.2 **Description of proposed development:** This development proposal is to construct six new dwellings on the site.

2.3 **Soil assessment:** British Standard (BS) 5837:2012 Trees in relation to design, demolition and construction – Recommendations advocates that a soil assessment should be carried out to inform decisions relating to Root Protection Areas (RPAs), tree protection, new planting and foundation design. I have consulted the British Geological Survey (BGS) website and their Geology Viewer and this advises that the bedrock geology for the site is Wittering Formation - Sand, silt and clay. I did not undertake any excavations on site to confirm this and a full geotechnical site investigation may need to be undertaken to provide a more in-depth level of information regarding soil type for the site.

2.4 **Tree survey methodology:** My inspection of the trees was visual and did not involve any climbing or exploratory investigations. During my visit, I identified individual trees and obvious groups/hedges where this was appropriate and I assigned an identification number to each, as shown on the plan in Appendix 1. I then collected the tree data included in Appendix 2 and placed the vegetation in one of four categories (U, A, B or C), as set out in British Standard (BS) 5837:2012. I have included the BS categorisations in Appendix 4 for easy reference. Where of relevance, I also estimated the crown spreads for each tree/group at the appropriate cardinal compass points and this information is also shown in the tree schedule in Appendix 2. Although this document is not a full and detailed report on tree health and safety, any significant visible structural defects or physiological conditions identified, together with preliminary tree works, are also noted in the appropriate columns in the tree schedule. However, this report is not a tree condition survey and a full post development tree inspection is recommended to establish that the trees retained pose acceptable levels of risk once the development has been completed.

2.5 **Tree survey restrictions:** Some of the trees were located in areas of dense vegetation. This, together with their proximity to one another meant that in some instances trees (or parts of trees) were not readily visible from all directions. These restrictions placed some significant limits on the capacity to assess tree condition and also on the use of laser measuring equipment, where clear line of sight is also required. I have therefore relied on an assessment of tree quality based on what was visible from vantage points around the site and provided estimates of tree attributes in such situations.

2.6 **Data interpretation:** The Root Protection Area (RPA) figures are included in Appendix 2. As set out in paragraphs 4.6.2 and 4.6.3 of BS 5837:2012, the RPAs may have been adjusted as a matter of arboricultural judgement to indicate the estimated likely position of important tree roots. These modified (or unmodified) RPAs can then help determine the location of the tree protection barriers and the position of any ground protection measures. Tree protection details are shown on the plan included in Appendix 1. Where there is a need for incursions into RPAs, an assessment of the implications of these activities is set out in Section 3 (Arboricultural Implications Assessment) of this report. Where appropriate, details of suitable work methodologies to protect trees and also mitigate any impact are set out in Section 5 (Arboricultural Method Statement).

## 3 ARBORICULTURAL IMPLICATIONS ASSESSMENT

3.1 **Introduction to the implications of the development proposal on trees:** BS 5837:2012 sets out in some detail how trees on development sites should be managed. It is usually accepted amongst arboriculturists that Category A (high quality) and Category B (moderate quality) trees are potential constraints on any development proposal. Trees and hedges belonging to Category C (low quality) are considered to be generally less important and such vegetation would not normally constrain site development proposals. Any trees/hedges graded category U are in such poor condition that they are considered unsuitable for retention. This is because they cannot realistically be retained in acceptable condition in respect of the current land use for longer than 10 years. Therefore, these can be effectively discounted in the context of a planning application. On this site a total of five individual trees, groups and hedges were recorded during the tree survey and these were assigned to the BS 5837:2012 categories, as set out in Table 1 below:

| Category A and B trees | Category C trees/hedges | Category U trees |
|---|---|---|
| No trees, groups or hedges were rated Category A or B | A total of five trees, groups and hedges (T1, G2, T3, H4 and H5) were rated Category C | No trees, groups or hedges were rated Category were rated purely Category U |

**Table 1:** Tree numbers and BS categories

No Category A or B trees were recorded during my survey and I have therefore focussed on the implications of the development proposal on the vegetation graded Category C on or near the site. Of the total of five trees, groups and hedges surveyed, two trees/groups and part of a hedge are scheduled to be removed to facilitate this development proposal. Additionally, one tree will have activities arising from the development occurring within its RPA. I have summarised the development related implications on trees in Table 2 below and set out the site tree issues in more detail in the following paragraphs.

| Trees/hedges to be removed for development | | Activities in RPAs arising from the development proposal | |
|---|---|---|---|
| Category A and B | Category C | Category A and B | Category C |
| n/a | G2, T3 and part of H5 | n/a | T1 (new cycle stores) |

**Table 2:** Trees lost and activities in RPAs arising from the development proposal

3.2 **Direct implications of the development proposal – Tree/hedge retention and loss**

3.2.1 **BS Category C vegetation to be removed (low quality):** As discussed, trees belonging to Category C are not normally retained where they would impose a significant constraint on the development or redevelopment of a site. In this instance, three Category C trees/groups/hedges (see Table 2) are scheduled to be wholly or partially removed to facilitate the development proposal. I set out my view on the implications of the loss of this vegetation, as follows:

- **Group G2:** These trees are not in the best condition, with poor form and some structural deficiencies. I have therefore indicated two trees to be removed, so as to provide a suitable garden space for plot 6 which would not be overly dominated by tree cover, with the remaining three trees on the boundary cut back and maintained as informal boundary hedging.

- **Tree T3:** The position of this fruit tree conflicts with proposed new car parking spaces and so it cannot be retained with this site configuration. Although full access to the tree was hindered by dense vegetation, its lower stem appeared wounded on its northern side, with some indication of internal decay. This suggests a somewhat limited tree safe and useful life expectancy. The tree is not especially large in size and so I feel its loss is unlikely to have any significant implications in the locality. I note the new tree planting indicated on the plan provided by the project architect, and with this mitigation planting to be provided, I feel that the loss of the tree is therefore acceptable from an arboricultural perspective.

- **Part of H5:** A section of this hedge will need to be removed to allow the new access to be formed. The part to be removed will be quite short in length and most of the hedge will be retained and supplemented with new tree planting close to its position. I therefore feel that any implications arising from the loss of this small hedge section indicated are likely to be low.

3.3 **Additional implications arising from the development proposal**

3.3.1 **Trees and activities within RPAs:** New cycle stores are indicated just within the RPA of tree T1. In my experience, these types of structures do not require significant foundations and can sit upon simple concrete bases cast at natural ground level. Consequently, I would not envisage any significant tree implications arising from the positioning of the new cycle stores, as indicated.

3.4 **Additional site tree issues**

3.4.1 **Trees to be pruned:** Proposed arboricultural works are set out in the tree schedule included in Appendix 2. In addition to the work discussed above, hedge H4 will require some pruning to bring it back into a sensible management regime. In my view, the trees comprising the hedge are not particularly special and so any pruning is likely to have a limited impact in the locality, with any such works justified for normal garden management irrespective of any development proposals.

3.4.2 **New tree planting potential:** As discussed, there is some scope for new tree planting on the site and preliminary new planting positions are indicated on the layout drawing provided by the project architect. Species and cultivar selection have not been elucidated at this stage. However, I feel that careful consideration of tree attributes could deliver a sustainable and interesting treescape for incoming residents. After discussion with all interested parties, the final tree planting details could be secured and reviewed by the council by way of a suitably worded landscape planning condition attached to any subsequently issued planning consent.

3.4.3 **Tree protection during development:** A preliminary Arboricultural Method Statement is included in Section 5 and this details the various issues associated with successful tree protection in a development context on this site. If deemed appropriate, this can be specifically referred to in a suitably worded planning condition, again attached to any subsequent planning permission issued by the council.

## 4 SUMMARY OF THE IMPLICATIONS OF THE DEVELOPMENT ON TREES

4.1 **Summary:** Of the total of five trees, groups and hedges surveyed, two trees/groups and part of a hedge are scheduled to be removed to facilitate this development proposal. Additionally, one tree will have activities arising from the development occurring within its RPA. The trees/hedges to be removed/cut back are all low quality and the work indicated is unlikely to have significant implications in the locality. Provided the tree protection measures set out in this report are realised and appropriate new tree planting is provided, then the proposal is acceptable from an arboricultural perspective and the risk of significant implications for any retained trees are likely to be low.

## 5 PRELIMINARY ARBORICULTURAL METHOD STATEMENT

### 5.1 Tree protection issues

5.1.1 **Tree Protection Plan (TPP):** The plan in Appendix 1 is illustrative, but is based on the layout drawings and topographical survey provided. Therefore, all scaled measurements should be checked against the original design documents. The attached plan and all other information in this report should only be used for dealing with the tree protection issues and all other uses are prohibited, unless authorised by **eco**urban ltd. All the existing trees/hedges will have been numbered, with any higher categories (A and B) highlighted in green and blue rectangles and any low categories (C and U) highlighted in grey and red respectively. The plan also shows the locations of the proposed protective measures and any vegetation to be removed is indicated with a red dashed outline. The TPP is an important document and a copy of it should be kept on site for reference during the construction phase of the project.

5.1.2 **Protective barriers:** The approximate location of the barriers is illustrated on the plan in Appendix 1 and information on barrier design based on BS 5837:2012 guidance is included in Appendix 3. The protective barriers will be erected before any materials or machinery are brought onto the site, and before any clearance or construction activities occur. With the exception of the barrier positions around tree T1 (see below), once the protective barriers have been positioned, these will stay in situ for the duration of the construction phase, unless previously agreed with the project arboricultural consultant or council's tree officer. There will be no access into the protected areas and the storage of excavated debris and building materials will be prohibited, unless authorised by the arboricultural consultant, after discussion with the council's tree officer. No fires or fuel storage will be allowed within (or near to) protected areas under any circumstances.

5.1.3 **Temporary repositioning of barriers:** With regard to tree T1, the barriers around this tree encompass an area where new cycle stores are indicated. The barriers in this location will be redeployed to the edge of the construction zone to allow this activity to commence and then returned to the positions indicated on the TPP once the work has been completed. However, the movement of the barriers will only occur immediately prior to the commencement of these tree sensitive works, so as to reduce the risk of any incidental construction related damage occurring to this tree which is scheduled for retention.

## 5.2 Additional tree-related issues

5.2.1 **Site supervision:** Site personnel will be properly briefed regarding the tree protection issues before any work starts and the tree protection will be inspected periodically to ensure the retained trees are protected in accordance with this document and any conditions imposed by the council.

5.2.2 **Installation of new services or upgrading of existing provision:** Where practicable, all new services will be outside the protected areas indicated on the plan in Appendix 1, but where existing services within RPAs require upgrading or new provision is needed, great care will be taken to minimise any disturbance. Trenchless installation will be the preferred option, but if this is not feasible for any reason, then excavation will be carried out by hand in accordance with the guidelines set out in NJUG Volume 4 - Guidelines for the Planning, Installation and Maintenance of Utility Apparatus in Proximity to Trees.

5.2.3 **Material storage areas and site compounds:** All construction material storage areas, cement silos or cement mixing areas, fuel storage points and compounds for machinery etc. will be outside protected areas, unless otherwise agreed with the council.

5.2.4 **Site offices, welfare facilities and contractor's car parking:** Whilst it is possible to have site offices and welfare facilities within RPAs, care is needed in their positioning and also in the connection of water, electricity and drainage to service them. Therefore, these will generally be sited outside the tree RPAs, unless agreed previously with the council. Contractor's car parking facilities will also be located away from retained trees.

5.2.5 **Tree works:** Any tree/hedge pruning or tree removal operations are set out in the tree schedule included in Appendix 2. Additionally, those trees/hedge sections scheduled for removal are also shown on the Tree Protection Plan included in Appendix 1.

5.2.6 **Planning, communication and preliminary timing of events:** It is not unusual for the details of timing of operations which could impact on important trees to only be finalised once planning consent has been given. Site managers, clearance and construction teams and other important personnel are normally only appointed at this stage and it is these people who will be crucial in delivering the tree protection detailed in this report. My experience is that the pre commencement site meeting is critical in terms of avoiding damage to trees and this particular aspect, along with tree protection issues can be specifically referenced in a suitably worded

planning condition imposed by the council. In the intervening time, I propose the following preliminary cascading timetable of events to help minimise the risk of impact on retained trees/hedges. However, the following schedule may be modified at the pre-commencement meeting, subject to discussion with all parties and agreement with the council:

1. Pre-commencement site meeting
2. Extent of any arboricultural supervision agreed
3. Tree works undertaken
4. Protective barriers erected before any clearance or construction activities occur on site and notification to the council that this is in place
5. Tree protection barriers repositioned to allow the formation of new cycle stores
6. Tree protection only removed at the end of the construction phase when there is no longer any risk to trees

Barrie Draper **BSc (Hons) Arb TechCert(ArborA) CertArb(RFS)**
**Arboricultural Consultant**

Date: **3 June 2026**

## Appendix 1: Tree Protection Plan

1 A2 plan

ecourban ARBORICULTURAL

ECO 5 - TREE PROTECTION AT PEAR TREE (PH), WINCHESTER ROAD, BOORLEY GREEN

SCALE: 1:200 @ A2

COMPOSITE PLAN: LAND SURVEY IN GREY, PROPOSED LAYOUT IN COLOUR

TXX
SPECIES
DBH xx*

**BS Category C:** Trees of low quality and value.
DBH (Stem diameter @ 1.5m in cm.
* Indicates estimates).
Avg - Average tree within group.
Lgst - Largest tree within group.

Tree protection barriers

**Root Protection Areas (RPAs):** Below ground tree constraints for retained trees based on BS 5837 guidance

Tree/hedge section to be removed

This drawing was originally produced in colour, therefore any subsequent monochrome photocopies may not show appropriate levels of detail and should not be relied upon for the purposes of dealing with site tree issues

## Appendix 2: Tree Schedule and Inventory

**Background fill colour represents BS 5837:2012 categories:** A Category trees have green backgrounds, B Category trees have light blue backgrounds, C Category trees have grey backgrounds and U Category trees have red backgrounds.

| Tree No. | Species | Ht (m) | Single stem dia. at 1.5m (cm) | Est. Dia. * | STEM DIAMETERS (MULTIPLE) | | | | | | | | Branch spread (m) | | | | Ht above ground (m) | Age class | Notes | Management proposals | BS cat | RPA area (m²) | RPA radius (m) |
|---|---|---|---|---|---|---|---|---|---|---|---|---|---|---|---|---|---|---|---|---|---|---|---|
| | | | | | Multi stemmed trees with 1 - 5 stems (cm) | | | | | Multi stemmed trees with 1 - 5 stems combined (cm) | Multi stemmed trees >5 stems | | | | | | | | | | | | |
| | | | | | 1 | 2 | 3 | 4 | 5 | | Mean stem dia. (cm) | No. of stems | N | E | S | W | | | | | | | |
| T1 | Oak | 14 | - | * | - | - | - | - | - | - | 25 | 9 | 6 | 6 | 6 | 6 | 5 | MA | Multi stemmed with some conjoined trunks. Some epicormic on scaffold branches. | | C1 | 254 | 9.0 |
| G2 | Goat willow | 6 | - | * Lgst | 16 | 12 | 18 | - | - | 27 | - | - | 4 | 5 | 4 | 1 | 2 | MA | Small, multi stemmed trees. Poor form and structural condition. | Remove two trees (see plan) and cut back remaining trees on boundary to create informal boundary hedge. | C1 | 33 | 3.2 |
| T3 | Pear | 9 | 45 | * | - | - | - | - | - | - | - | - | 4 | 5 | 4 | 5 | 3 | M | Limited access to survey due to dense undergrowth. Wounded with decay lower stem north side. | Fell. | C1 /U | 92 | 5.4 |

# Appendix 2: Tree Schedule and Inventory

| Tree No. | Species | Ht (m) | Single stem dia. at 1.5m (cm) | Est. Dia. * | STEM DIAMETERS (MULTIPLE) | | | | | | | | Branch spread (m) | | | | Ht above ground (m) | Age class | Notes | Management proposals | BS cat | RPA area (m²) | RPA radius (m) |
|---|---|---|---|---|---|---|---|---|---|---|---|---|---|---|---|---|---|---|---|---|---|---|---|
| | | | | | Multi stemmed trees with 1 - 5 stems (cm) | | | | | Multi stemmed trees with 1 - 5 stems combined (cm) | Multi stemmed trees >5 stems | | | | | | | | | | | | |
| | | | | | 1 | 2 | 3 | 4 | 5 | | Mean stem dia. (cm) | No. of stems | N | E | S | W | | | | | | | |
| H4 | Mainly blackthorn | 6 Lgst | 15 | * Lgst | - | - | - | - | - | - | - | - | 3 | 3 | 4 | 2 | n/a | MA | Undermanaged boundary hedging. Limited access to survey and restricted clear line of sight. Proximity to overhead service in north eastern corner. | Cut back growth and reduce in height to no less than 2m to create informal boundary hedge. | C2 | 10 | 1.8 |
| H5 | Mixed species including blackthorn, snowberry and oak | 2 | 8 | * Avg at base | - | - | - | - | - | - | - | - | - | 1 | - | 1 | n/a | MA | Informal boundary hedging. | Remove small section to allow new access to be formed. | C2 | 10 | 1.8 |

***Abbreviations:***

| Abbreviations | Meaning | Abbreviations | Meaning | Abbreviations | Meaning |
|---|---|---|---|---|---|
| **T** | *Individual tree* | **M** | *Mature* | > | *More than* |
| **G** | *Groups of trees* | **MA** | *Maturing* | < | *Less than* |
| **H** | *Hedge* | **Y** | *Young* | **Lgst** | *Largest tree diameter within group* |
| **W** | *Woodland* | **RPA** | *Root Protection Area* | **Avg** | *Average tree diameter within group* |

# Appendix 2: Tree Schedule and Inventory

## *Tree Schedule Notes:*

| | |
|---|---|
| **Tree number** | *Assigned during the site visit and also referenced on the plan in Appendix 1.* |
| **Species** | *Common name and referenced to scientific name in the above list. Where I have some doubt over the actual tree species, the genus will have been noted followed by sp. Where trees are numerous and present in groups, not every individual species may have been noted.* |
| **Height** | *Measurement of total tree height using a laser hypsometer to nearest metre or where clear line of site is not possible then an estimate based on interpolation of heights of nearby measured trees.* |
| **Stem diameters** | *Measurement of stem diameter either at 1.5m above ground (or in accordance with BS guidance where trees have multiple stems) with a forester's girth measuring tape.* ***Diameters followed by asterisk symbol indicate estimated diameters because of access difficulties, presence of ivy or other obstructions.*** *Where trees are present in a group, the tree with the largest stem diameter within the group will have been measured/estimated.* |
| **Est. Dia.** | *Estimated diameters due to access restrictions are indicated with an asterisk* |
| **Branch spread** | *Where appropriate and where ground conditions allow, an estimate of the crown spread at each of the cardinal compass points. Where only part of the site is affected by trees, measurement may be in one or two directions only* |
| **Existing height above ground level** | *Distance in metres to first significant branch or canopy or a height above which crown lifting operations would not be appropriate* |
| **Age class** | *Simplistic estimate of tree age in one of FOUR categories (young, maturing, mature or over mature).* |
| **Notes** | *Although this document is not intended to be a full and detailed report on tree health and safety, any significant structural defects or physiological conditions have been identified where these were visible. Where no entries are recorded, this indicates no observable issues were identified. Where there is restricted access to the base of a tree, its attributes are assessed from the nearest point of access. Climbing inspections are not carried out during a walkover tree survey and, if heavy ivy is present, tree condition is assessed from what can be seen from the ground.* |
| **Management proposals** | *The inspection of all trees was of a preliminary nature and only defects visible from the ground have been identified. Each individual tree may not have been inspected closely because of access difficulties and only defects visible from the inspection point have been identified. Monitoring may be indicated where tree risk can be adequately managed by increased frequency of site inspections. Further investigation may be indicated where additional data may be required beyond a purely visual assessment. However, a full post development tree inspection is recommended to establish that the trees retained during construction pose acceptable levels of risk once the development has been completed.* |
| **BS 5837 :2012 Category** | *Either U, A, B or C based on the BS 5837:2012 guidance.* |
| **RPA and RPA radius** | *RPA and RPA radius calculations have been undertaken in accordance with the guidance set out in BS 5837:2012.* |

## Appendix 2: Tree Schedule and Inventory

***Tree Inventory:***

| Common Tree Names | Scientific Tree Names | | Common Tree Names | Scientific Tree Names |
|---|---|---|---|---|
| Blackthorn | *Prunus spinosa* | | Pear | *Pyrus* sp. |
| Goat willow | *Salix caprea* | | Snowberry | *Symphoricarpos* sp. |
| Oak | *Quercus robur* | | | |

## Appendix 3: Illustrative Specification for Tree Protection Barriers

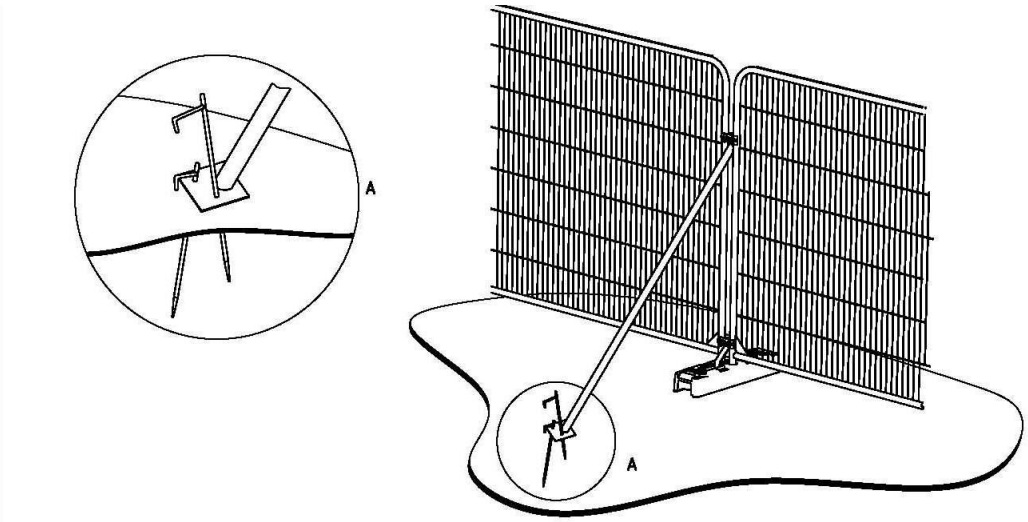


a) Stabilizer strut with base plate secured with ground pins

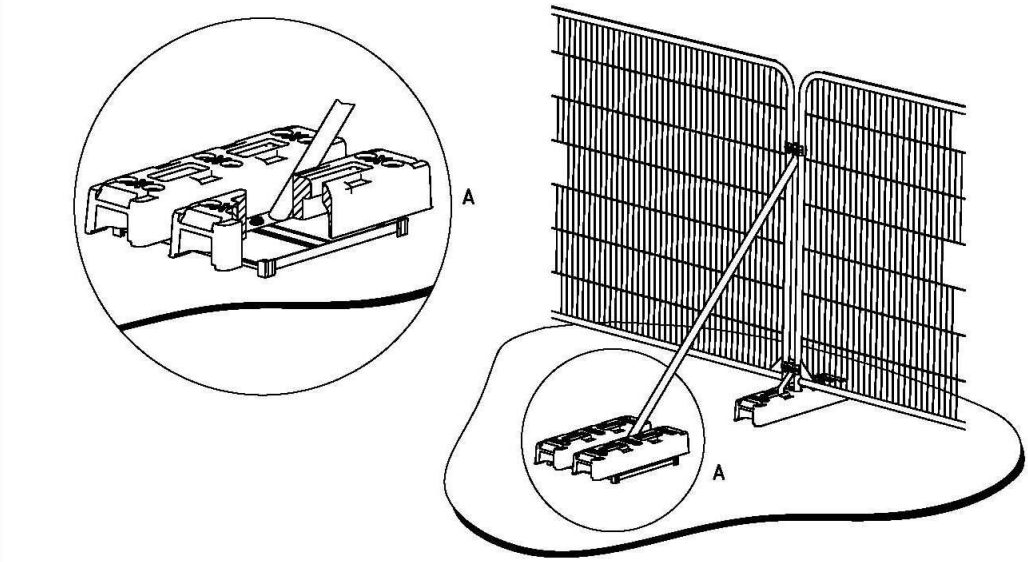


b) Stabilizer strut mounted on block tray

Illustration taken from British Standard 5837:2012 -
Trees in relation to design, demolition and construction – Recommendations.

2m tall welded mesh panels on rubber or concrete feet might provide an adequate level of protection from cars, vans, pedestrians and manually operated plant. In such cases, the fence panels should be joined together using a minimum of two anti-tamper couplers, installed so that they can only be removed from inside the fence. The distance between the fence couplers should be at least 1 m and should be uniform throughout the fence. The panels should be supported on the inner side by stabilizer struts, which should normally be attached to a base plate secured with ground pins
– BS 5837:2012

| | |
|---|---|
| **Ref: Tree Protection Barriers (Type 2)** | **Drawing No. TPB2** |
| **Scale: N/A** | |

# Appendix 4: BS 5837:2012 – Assessment Categories

| TREES FOR REMOVAL | | |
|---|---|---|
| **Category and definition** | **Criteria** | **Identification on plan** |
| Category U<br><br>Those in such a condition that they cannot realistically be retained as living trees in the context of the current land use for longer than 10 years | • Trees that have a serious, irremediable, structural defect, such that their early loss is expected due to collapse, including those that will become unviable after removal of other category U trees (e.g. where, for whatever reason, the loss of companion shelter cannot be mitigated by pruning)<br>• Trees that are dead or are showing signs of significant, immediate, and irreversible overall decline<br>• Trees infected with pathogens of significance to the health and/or safety of other trees nearby, or very low quality trees suppressing adjacent trees of better quality<br><br>*NOTE Category U trees can have existing or potential conservation value which it might be desirable to preserve.* | RED |

| TREES TO BE CONSIDERED FOR RETENTION | | | | |
|---|---|---|---|---|
| **Category and definition** | **Criteria — Subcategories** | | | **Identification on plan** |
| | **1 Mainly arboricultural qualities** | **2 Mainly landscape qualities** | **3 Mainly cultural values, including conservation** | |
| Category A<br><br>Trees of high quality with an estimated remaining life expectancy of at least 40 years | Trees that are particularly good examples of their species, especially if rare or unusual; or those that are essential components of groups or formal or semi-formal arboricultural features (e.g. the dominant and/or principal trees within an avenue) | Trees, groups or woodlands of particular visual importance as arboricultural and/or landscape features | Trees, groups or woodlands of significant conservation, historical, commemorative or other value (e.g. veteran trees or wood-pasture) | GREEN |
| Category B<br><br>Trees of moderate quality with an estimated remaining life expectancy of at least 20 years | Trees that might be included in category A, but are downgraded because of impaired condition (e.g. presence of significant though remediable defects, including unsympathetic past management and storm damage), such that they are unlikely to be suitable for retention for beyond 40 years; or trees lacking the special quality necessary to merit the category A designation) | Trees present in numbers, usually growing as groups or woodlands, such that they attract a higher collective rating than they might as individuals; or trees occurring as collectives but situated so as to make little visual contribution to the wider locality | Trees with material conservation or other cultural value | BLUE |
| Category C<br><br>Trees of low quality with an estimated remaining life expectancy of at least 10 years, or young trees with a stem diameter below 150 m | Unremarkable trees of very limited merit or such impaired condition that they do not qualify in higher categories | Trees present in groups or woodlands, but without this conferring on them significantly greater collective landscape value; and/or trees offering low or only temporary/transient landscape benefits | Trees with no material conservation or other cultural value | GREY |

## Appendix 5: Qualifications and Experience of Barrie Draper

1 **Qualifications:** I have a BSc degree (with Honours) in Arboriculture from the University of Central Lancashire. I also hold a BTEC Higher National Diploma (HND) in Forestry (Lowland Management), the Arboricultural Association's Technician's Certificate in Arboriculture (Tech Cert), the Royal Forestry Society's Certificate in Arboriculture (Cert Arb) and the National Examinations Board (NEB) Certificate in Forestry.

2 **Career experience:** I began my arboricultural career in 1993 as an arborist with Portsmouth City Council. During my time with the council I worked for both the direct labour organisation and for a private contractor where I obtained valuable hands on experience in all aspects of arboriculture. From 1999 to 2002 I was employed as Senior Arborist by Parchment Housing Group, a housing association based near Portsmouth. I managed the Groups' tree stock on their behalf, carrying out tree inspections and practical management operations. I have also worked in local government, spending time with Thurrock Borough Council in Essex where I was the Tree and Landscape Officer, and with Winchester City Council, where I was Arboricultural Officer for a period of 2 years. During my time working in local government, I was responsible for making Tree Preservation Orders, administering applications to work on protected trees and advising on planning applications when trees were considered potential constraints on development. Working within a planning environment allowed me to gain valuable experience in the management of trees in development situations and an understanding of the planning process and how it relates to trees. From January 2005 I worked for Barrell Tree Consultancy Ltd advising clients on a wide range of tree related issues. I then left the company in September 2008 and set up **eco**urban ltd.

ecourban
ARBORICULTURAL

ecourban ltd, 13 The Greencroft, Salisbury SP1 1JD
T: 01962 877 397 M: 07532 373 563 E: barrie@eco-urban.co.uk
W: www.eco-urban.co.uk