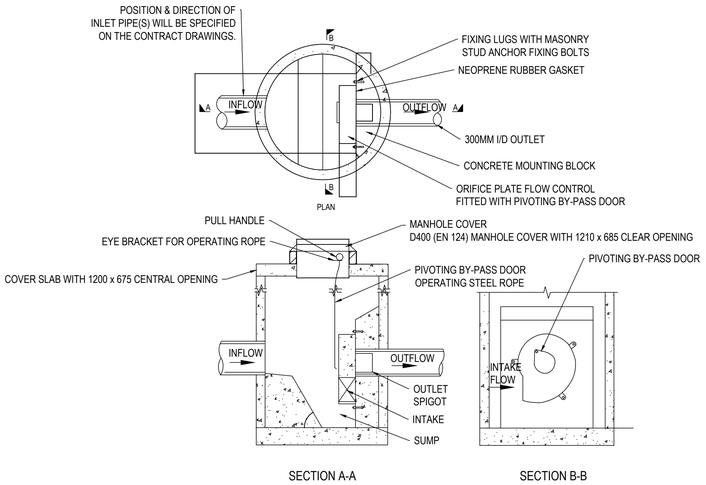


FLOW CONTROL CHAMBER WITH HYDRO-BRAKE

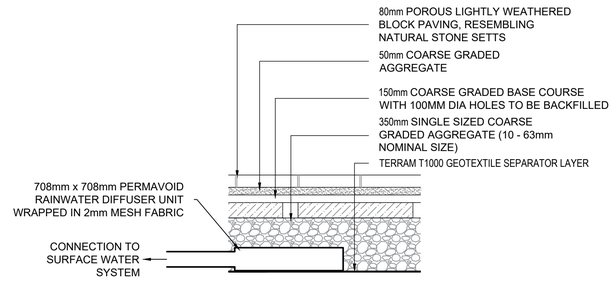


TYPICAL CONNECTION FROM PERMEABLE BLOCK
PAVING TO SURFACE WATER SYSTEM
SCALE 1:50

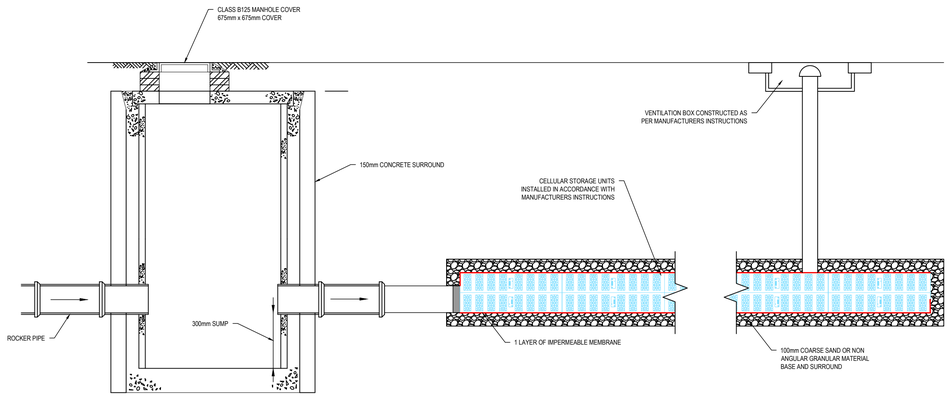


LONGITUDINAL SECTION THROUGH CELLULAR STORAGE TANK

NOT TO SCALE

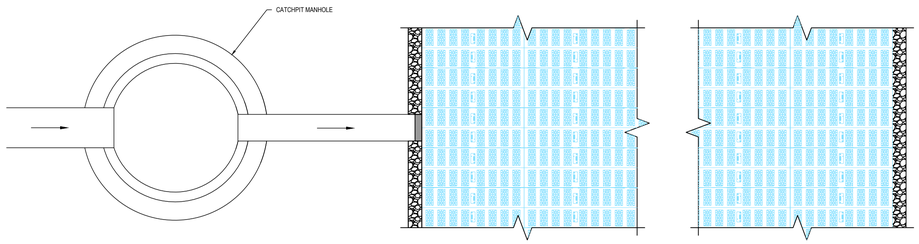


PLAN VIEW OF TYPICAL CELLULAR STORAGE TANK
NOT TO SCALE

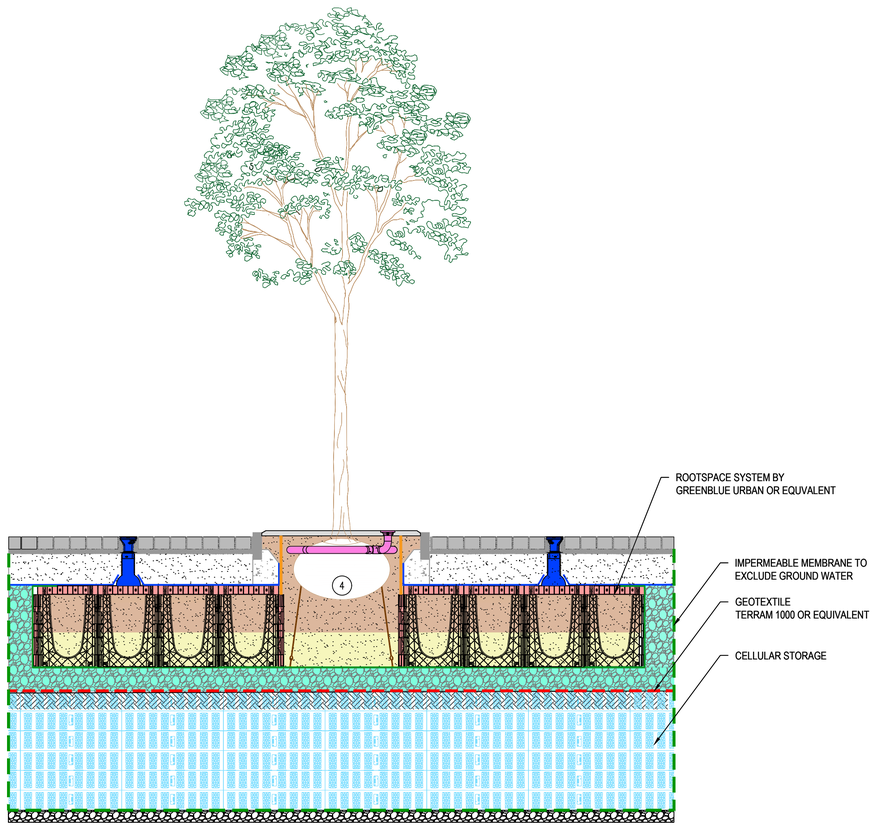


TYPICAL SECTION OF TREE AND ROOT CELLS OVER CELLULAR STORAGE TANK
SCALE 1:25

Stantec

Stantec UK Limited
Caversham Bridge House, Waterman Place
REDDING UK OFFICE
RG1 8DN
Tel. +44 1189 500 761
www.stantec.com/uk

Copyright Reserved

The Contractor shall verify and be responsible for all dimensions. DO NOT scale the drawing. Any errors or omissions shall be reported to Stantec without delay.
The Copyrights to all designs and drawings are the property of Stantec. Reproduction or use for any purpose other than that authorised by Stantec is forbidden.

Notes

UTILITIES NOTE: The position of any existing public or private sewers, utility services, plant or apparatus shown on this drawing is believed to be correct, but no warranty to this is expressed or implied. Other such plant or apparatus may also be present but not shown. The Contractor is therefore advised to undertake their own investigation where the presence of any existing sewers, services, plant or apparatus may affect their operations.

NOTES:

1. THIS DRAWING IS TO BE READ IN CONJUNCTION WITH ALL OTHER ENGINEER'S AND LANDSCAPING DRAWINGS.
2. ALL DIMENSIONS ARE IN METRES UNLESS NOTED OTHERWISE.
3. DO NOT SCALE FROM THIS DRAWING.
4. ALL LEVELS ARE IN METRES ABOVE ORDNANCE DATUM (AOD)
5. THE USE OF THIS DRAWING DOES NOT ABSOLVE THE CLIENT FROM THEIR RESPONSIBILITIES IN REGARDS TO HEALTH & SAFETY AND CDM REGULATIONS.

| Issued/Revision | By | Appd | YYYY.MM.DD |
|---|---|---|---|
| P01 FIRST ISSUE | JLW | DH | 2026.05.18 |

| | Dwn. | Dsgn. | Chkd. | YYYY.MM.DD |
|---|---|---|---|---|
| | JLW | JLW | DH | 2026.05.18 |

Issue Status

**S5 - FOR REVIEW AND ACCEPTANCE**

This document is suitable only for the purpose noted above.
Use of this document for any other purpose is not permitted.

Client/Project Logo

EASTLEIGH BOROUGH COUNCIL

Client/Project
ONE HORTON HEATH

EASTLEIGH BOROUGH COUNCIL

Title
ONE HORTON HEATH PRIMARY SCHOOL
DRAINAGE CONSTRUCTION DETAILS

Project No.
332612639

A1 Scale
AS SHOWN

Revision
**P01**

Drawing No.
**OHH-STN-00-XX-DR-C-000504**

Plotted: 18.05.2026 20:05:18 3.5721 PM By: Bartholomew, Amy
CHROMA SHEET: ISO A1 J:\332612639 - one horton heath primary school\Civil\design\con\drwg\OHH-00-XX-dr-C-000504

# Appendix F MicroDrainage Calculations Northern Network

## STORM SEWER DESIGN by the Modified Rational Method

### Design Criteria for Northern Network

Pipe Sizes STANDARD Manhole Sizes STANDARD

FEH Rainfall Model

| | |
|---|---|
| Return Period (years) | 2 |
| FEH Rainfall Version | 1999 |
| Site Location | GB 447800 117600 SU 47800 17600 |
| C (1km) | -0.028 |
| D1 (1km) | 0.423 |
| D2 (1km) | 0.310 |
| D3 (1km) | 0.398 |
| E (1km) | 0.304 |
| F (1km) | 2.288 |
| Maximum Rainfall (mm/hr) | 50 |
| Maximum Time of Concentration (mins) | 30 |
| Foul Sewage (l/s/ha) | 0.000 |
| Volumetric Runoff Coeff. | 0.840 |
| PIMP (%) | 100 |
| Add Flow / Climate Change (%) | 0 |
| Minimum Backdrop Height (m) | 0.200 |
| Maximum Backdrop Height (m) | 1.500 |
| Min Design Depth for Optimisation (m) | 1.200 |
| Min Vel for Auto Design only (m/s) | 1.00 |
| Min Slope for Optimisation (1:X) | 500 |

Designed with Level Soffits

### Network Design Table for Northern Network

# - Indicates pipe length does not match coordinates
« - Indicates pipe capacity < flow

| PN | Length (m) | Fall (m) | Slope (1:X) | I.Area (ha) | T.E. (mins) | Base Flow (l/s) | k (mm) | HYD SECT | DIA (mm) | Section Type | Auto Design |
|---|---|---|---|---|---|---|---|---|---|---|---|
| 1.000 | 34.298 | 0.205 | 167.0 | 0.114 | 4.00 | 0.0 | 0.600 | o | 225 | Pipe/Conduit | |
| 1.001 | 14.041 | 0.084 | 167.0 | 0.040 | 0.00 | 0.0 | 0.600 | o | 225 | Pipe/Conduit | |
| 1.002 | 22.191 | 0.133 | 167.0 | 0.034 | 0.00 | 0.0 | 0.600 | o | 225 | Pipe/Conduit | |
| 1.003 | 18.722 | 0.079 | 237.0 | 0.064 | 0.00 | 0.0 | 0.600 | o | 300 | Pipe/Conduit | |

### Network Results Table

| PN | Rain (mm/hr) | T.C. (mins) | US/IL (m) | Σ I.Area (ha) | Σ Base Flow (l/s) | Foul (l/s) | Add Flow (l/s) | Vel (m/s) | Cap (l/s) | Flow (l/s) |
|---|---|---|---|---|---|---|---|---|---|---|
| 1.000 | 50.00 | 4.57 | 26.125 | 0.114 | 0.0 | 0.0 | 0.0 | 1.01 | 40.1 | 17.3 |
| 1.001 | 50.00 | 4.80 | 25.920 | 0.154 | 0.0 | 0.0 | 0.0 | 1.01 | 40.1 | 23.4 |
| 1.002 | 50.00 | 5.17 | 25.836 | 0.188 | 0.0 | 0.0 | 0.0 | 1.01 | 40.1 | 28.5 |
| 1.003 | 50.00 | 5.47 | 25.628 | 0.252 | 0.0 | 0.0 | 0.0 | 1.02 | 71.9 | 38.2 |

©1982-2020 Innovyze

## Network Design Table for Northern Network

| PN | Length (m) | Fall (m) | Slope (1:X) | I.Area (ha) | T.E. (mins) | Base Flow (l/s) | k (mm) | HYD SECT | DIA (mm) | Section Type | Auto Design |
|---|---|---|---|---|---|---|---|---|---|---|---|
| 1.004 | 27.698 | 0.116 | 238.8 | 0.104 | 0.00 | 0.0 | 0.600 | o | 300 | Pipe/Conduit | |
| 1.005 | 35.735 | 0.150 | 238.0 | 0.096 | 0.00 | 0.0 | 0.600 | o | 300 | Pipe/Conduit | |
| 2.000 | 36.069 | 0.152 | 237.3 | 0.129 | 4.00 | 0.0 | 0.600 | o | 300 | Pipe/Conduit | |
| 2.001 | 36.209 | 0.152 | 238.2 | 0.115 | 0.00 | 0.0 | 0.600 | o | 450 | Pipe/Conduit | |
| 2.002 | 43.198# | 0.356 | 121.3 | 0.000 | 0.00 | 0.0 | 0.600 | o | 450 | Pipe/Conduit | |
| 2.003 | 29.762 | 0.367 | 81.1 | 0.036 | 0.00 | 0.0 | 0.600 | o | 450 | Pipe/Conduit | |
| 1.006 | 26.412 | 0.069 | 382.8 | 0.028 | 0.00 | 0.0 | 0.600 | o | 450 | Pipe/Conduit | |
| 1.007 | 25.562 | 0.064 | 399.4 | 0.054 | 0.00 | 0.0 | 0.600 | o | 450 | Pipe/Conduit | |
| 1.008 | 5.083 | 0.013 | 391.0 | 0.031 | 0.00 | 0.0 | 0.600 | o | 450 | Pipe/Conduit | |
| 3.000 | 35.587 | 0.218 | 163.2 | 0.057 | 4.00 | 0.0 | 0.600 | o | 225 | Pipe/Conduit | |
| 3.001 | 4.962 | 0.060 | 82.7 | 0.035 | 0.00 | 0.0 | 0.600 | o | 225 | Pipe/Conduit | |
| 3.002 | 32.527 | 0.195 | 167.0 | 0.053 | 0.00 | 0.0 | 0.600 | o | 225 | Pipe/Conduit | |
| 3.003 | 11.969 | 0.050 | 239.4 | 0.030 | 0.00 | 0.0 | 0.600 | o | 300 | Pipe/Conduit | |
| 4.000 | 20.912 | 0.312 | 67.0 | 0.028 | 4.00 | 0.0 | 0.600 | o | 150 | Pipe/Conduit | |
| 4.001 | 33.085 | 0.291 | 113.7 | 0.032 | 0.00 | 0.0 | 0.600 | o | 225 | Pipe/Conduit | |
| 4.002 | 31.704 | 0.203 | 156.2 | 0.047 | 0.00 | 0.0 | 0.600 | o | 225 | Pipe/Conduit | |
| 4.003 | 7.178 | 0.238 | 30.2 | 0.058 | 0.00 | 0.0 | 0.600 | o | 225 | Pipe/Conduit | |

## Network Results Table

| PN | Rain (mm/hr) | T.C. (mins) | US/IL (m) | Σ I.Area (ha) | Σ Base Flow (l/s) | Foul (l/s) | Add Flow (l/s) | Vel (m/s) | Cap (l/s) | Flow (l/s) |
|---|---|---|---|---|---|---|---|---|---|---|
| 1.004 | 48.39 | 5.93 | 25.549 | 0.356 | 0.0 | 0.0 | 0.0 | 1.01 | 71.6 | 52.3 |
| 1.005 | 45.74 | 6.51 | 25.433 | 0.452 | 0.0 | 0.0 | 0.0 | 1.01 | 71.7 | 62.7 |
| 2.000 | 50.00 | 4.59 | 26.310 | 0.129 | 0.0 | 0.0 | 0.0 | 1.02 | 71.8 | 19.6 |
| 2.001 | 50.00 | 5.05 | 26.008 | 0.244 | 0.0 | 0.0 | 0.0 | 1.31 | 208.8 | 37.0 |
| 2.002 | 50.00 | 5.44 | 25.856 | 0.244 | 0.0 | 0.0 | 0.0 | 1.84 | 293.4 | 37.0 |
| 2.003 | 49.73 | 5.66 | 25.500 | 0.280 | 0.0 | 0.0 | 0.0 | 2.26 | 359.3 | 42.2 |
| 1.006 | 44.04 | 6.94 | 25.133 | 0.760 | 0.0 | 0.0 | 0.0 | 1.03 | 164.3 | 101.5 |
| 1.007 | 42.52 | 7.36 | 25.064 | 0.814 | 0.0 | 0.0 | 0.0 | 1.01 | 160.8 | 105.0 |
| 1.008 | 42.24 | 7.44 | 25.000 | 0.845 | 0.0 | 0.0 | 0.0 | 1.02 | 162.5 | 108.3 |
| 3.000 | 50.00 | 4.58 | 25.941 | 0.057 | 0.0 | 0.0 | 0.0 | 1.02 | 40.6 | 8.6 |
| 3.001 | 50.00 | 4.64 | 25.723 | 0.092 | 0.0 | 0.0 | 0.0 | 1.44 | 57.2 | 14.0 |
| 3.002 | 50.00 | 5.18 | 25.663 | 0.145 | 0.0 | 0.0 | 0.0 | 1.01 | 40.1 | 22.0 |
| 3.003 | 50.00 | 5.37 | 25.393 | 0.175 | 0.0 | 0.0 | 0.0 | 1.01 | 71.5 | 26.5 |
| 4.000 | 50.00 | 4.28 | 26.537 | 0.028 | 0.0 | 0.0 | 0.0 | 1.23 | 21.7 | 4.2 |
| 4.001 | 50.00 | 4.73 | 26.150 | 0.060 | 0.0 | 0.0 | 0.0 | 1.23 | 48.7 | 9.1 |
| 4.002 | 50.00 | 5.24 | 25.859 | 0.107 | 0.0 | 0.0 | 0.0 | 1.04 | 41.5 | 16.2 |
| 4.003 | 50.00 | 5.29 | 25.656 | 0.165 | 0.0 | 0.0 | 0.0 | 2.39 | 95.1 | 25.0 |

©1982-2020 Innovyze

## Network Design Table for Northern Network

| PN | Length (m) | Fall (m) | Slope (1:X) | I.Area (ha) | T.E. (mins) | Base Flow (l/s) | k (mm) | HYD SECT | DIA (mm) | Section Type | Auto Design |
|---|---|---|---|---|---|---|---|---|---|---|---|
| 3.004 | 26.116 | 0.206 | 126.8 | 0.012 | 0.00 | 0.0 | 0.600 | o | 300 | Pipe/Conduit | |
| 1.009 | 13.444 | 0.784 | 17.1 | 0.068 | 0.00 | 0.0 | 0.600 | o | 450 | Pipe/Conduit | |
| 1.010 | 8.265 | 0.083 | 99.6 | 0.070 | 0.00 | 0.0 | 0.600 | o | 225 | Pipe/Conduit | |

## Network Results Table

| PN | Rain (mm/hr) | T.C. (mins) | US/IL (m) | Σ I.Area (ha) | Σ Base Flow (l/s) | Foul (l/s) | Add Flow (l/s) | Vel (m/s) | Cap (l/s) | Flow (l/s) |
|---|---|---|---|---|---|---|---|---|---|---|
| 3.004 | 49.61 | 5.69 | 25.343 | 0.352 | 0.0 | 0.0 | 0.0 | 1.39 | 98.6 | 53.0 |
| 1.009 | 42.08 | 7.49 | 24.987 | 1.265 | 0.0 | 0.0 | 0.0 | 4.93 | 783.8 | 161.5 |
| 1.010 | 41.74 | 7.60 | 24.203 | 1.335 | 0.0 | 0.0 | 0.0 | 1.31 | 52.1« | 169.0 |

©1982-2020 Innovyze

## Manhole Schedules for Northern Network

| MH Name | MH CL (m) | MH Depth (m) | MH Connection | MH Diam.,L*W (mm) | Pipe Out PN | Pipe Out Invert Level (m) | Pipe Out Diameter (mm) | Pipes In PN | Pipes In Invert Level (m) | Pipes In Diameter (mm) | Backdrop (mm) |
|---|---|---|---|---|---|---|---|---|---|---|---|
| SW01 | 27.250 | 1.125 | Open Manhole | 1200 | 1.000 | 26.125 | 225 | | | | |
| SW02 | 27.359 | 1.440 | Open Manhole | 1200 | 1.001 | 25.920 | 225 | 1.000 | 25.920 | 225 | |
| SW03 | 27.250 | 1.414 | Open Manhole | 1200 | 1.002 | 25.836 | 225 | 1.001 | 25.836 | 225 | |
| SW04 | 27.265 | 1.637 | Open Manhole | 1200 | 1.003 | 25.628 | 300 | 1.002 | 25.703 | 225 | |
| SW05 | 27.325 | 1.776 | Open Manhole | 1200 | 1.004 | 25.549 | 300 | 1.003 | 25.549 | 300 | |
| SW06 | 27.224 | 1.791 | Open Manhole | 1200 | 1.005 | 25.433 | 300 | 1.004 | 25.433 | 300 | |
| SW07 | 27.510 | 1.200 | Open Manhole | 1200 | 2.000 | 26.310 | 300 | | | | |
| SW08 | 27.649 | 1.641 | Open Manhole | 1350 | 2.001 | 26.008 | 450 | 2.000 | 26.158 | 300 | |
| SW09 | 27.652 | 1.796 | Open Manhole | 1350 | 2.002 | 25.856 | 450 | 2.001 | 25.856 | 450 | |
| SW10 | 26.754 | 1.254 | Open Manhole | 1350 | 2.003 | 25.500 | 450 | 2.002 | 25.500 | 450 | |
| SW11 | 27.083 | 1.950 | Open Manhole | 1350 | 1.006 | 25.133 | 450 | 1.005 | 25.283 | 300 | |
| | | | | | | | | 2.003 | 25.133 | 450 | |
| SW12 | 27.026 | 1.962 | Open Manhole | 1350 | 1.007 | 25.064 | 450 | 1.006 | 25.064 | 450 | |
| SW13 | 27.115 | 2.115 | Open Manhole | 1350 | 1.008 | 25.000 | 450 | 1.007 | 25.000 | 450 | |
| SW14 | 27.366 | 1.425 | Open Manhole | 1200 | 3.000 | 25.941 | 225 | | | | |
| SW15 | 27.148 | 1.425 | Open Manhole | 1200 | 3.001 | 25.723 | 225 | 3.000 | 25.723 | 225 | |
| SW16 | 27.088 | 1.425 | Open Manhole | 1200 | 3.002 | 25.663 | 225 | 3.001 | 25.663 | 225 | |
| SW17 | 27.198 | 1.805 | Open Manhole | 1200 | 3.003 | 25.393 | 300 | 3.002 | 25.468 | 225 | |
| SW18 | 27.887 | 1.350 | Open Manhole | 1200 | 4.000 | 26.537 | 150 | | | | |
| SW19 | 27.575 | 1.425 | Open Manhole | 1200 | 4.001 | 26.150 | 225 | 4.000 | 26.225 | 150 | |
| SW20 | 27.284 | 1.425 | Open Manhole | 1200 | 4.002 | 25.859 | 225 | 4.001 | 25.859 | 225 | |
| SW21 | 27.081 | 1.425 | Open Manhole | 1200 | 4.003 | 25.656 | 225 | 4.002 | 25.656 | 225 | |
| SW22 | 27.167 | 1.824 | Open Manhole | 1200 | 3.004 | 25.343 | 300 | 3.003 | 25.343 | 300 | |
| | | | | | | | | 4.003 | 25.418 | 225 | |
| SW23 | 27.000 | 2.013 | Open Manhole | 1350 | 1.009 | 24.987 | 450 | 1.008 | 24.987 | 450 | |
| | | | | | | | | 3.004 | 25.137 | 300 | |
| SW24 | 26.650 | 2.447 | Open Manhole | 1350 | 1.010 | 24.203 | 225 | 1.009 | 24.203 | 450 | |
| EX MH40 | 26.720 | 2.600 | Open Manhole | 1500 | | OUTFALL | | 1.010 | 24.120 | 225 | |

| MH Name | Manhole Easting (m) | Manhole Northing (m) | Intersection Easting (m) | Intersection Northing (m) | Manhole Access | Layout (North) |
|---|---|---|---|---|---|---|
| SW01 | 449070.813 | 116932.442 | 449070.813 | 116932.442 | Required | |
| SW02 | 449097.511 | 116953.972 | 449097.511 | 116953.972 | Required | |

©1982-2020 Innovyze

## Manhole Schedules for Northern Network

| MH Name | Manhole Easting (m) | Manhole Northing (m) | Intersection Easting (m) | Intersection Northing (m) | Manhole Access | Layout (North) |
|---|---|---|---|---|---|---|
| SW03 | 449088.669 | 116964.878 | 449088.669 | 116964.878 | Required | |
| SW04 | 449105.920 | 116978.836 | 449105.920 | 116978.836 | Required | |
| SW05 | 449123.484 | 116985.319 | 449123.484 | 116985.319 | Required | |
| SW06 | 449144.817 | 117002.985 | 449144.817 | 117002.985 | Required | |
| SW07 | 449093.819 | 116939.465 | 449093.819 | 116939.465 | Required | |
| SW08 | 449121.791 | 116962.236 | 449121.791 | 116962.236 | Required | |
| SW09 | 449149.872 | 116985.095 | 449149.872 | 116985.095 | Required | |
| SW10 | 449152.089 | 117032.155 | 449152.089 | 117032.155 | Required | |
| SW11 | 449122.359 | 117030.781 | 449122.359 | 117030.781 | Required | |
| SW12 | 449101.929 | 117014.041 | 449101.929 | 117014.041 | Required | |
| SW13 | 449082.180 | 116997.812 | 449082.180 | 116997.812 | Required | |
| SW14 | 449062.711 | 116922.691 | 449062.711 | 116922.691 | Required | |
| SW15 | 449040.425 | 116950.436 | 449040.425 | 116950.436 | Required | |
| SW16 | 449040.966 | 116955.369 | 449040.966 | 116955.369 | Required | |
| SW17 | 449066.127 | 116975.983 | 449066.127 | 116975.983 | Required | |

©1982-2020 Innovyze

## Manhole Schedules for Northern Network

| MH Name | Manhole Easting (m) | Manhole Northing (m) | Intersection Easting (m) | Intersection Northing (m) | Manhole Access | Layout (North) |
|---|---|---|---|---|---|---|
| SW18 | 449034.268 | 116917.919 | 449034.268 | 116917.919 | Required | |
| SW19 | 449018.850 | 116932.047 | 449018.850 | 116932.047 | Required | |
| SW20 | 449026.932 | 116964.130 | 449026.932 | 116964.130 | Required | |
| SW21 | 449051.558 | 116984.097 | 449051.558 | 116984.097 | Required | |
| SW22 | 449058.632 | 116985.315 | 449058.632 | 116985.315 | Required | |
| SW23 | 449078.942 | 117001.731 | 449078.942 | 117001.731 | Required | |
| SW24 | 449070.211 | 117011.955 | 449070.211 | 117011.955 | Required | |
| EX MH40 | 449062.266 | 117014.232 | | | No Entry | |

©1982-2020 Innovyze

## PIPELINE SCHEDULES for Northern Network

### Upstream Manhole

# - Indicates pipe length does not match coordinates

| PN | Hyd Sect | Diam (mm) | MH Name | C.Level (m) | I.Level (m) | D.Depth (m) | MH Connection | MH DIAM., L*W (mm) |
|---|---|---|---|---|---|---|---|---|
| 1.000 | o | 225 | SW01 | 27.250 | 26.125 | 0.900 | Open Manhole | 1200 |
| 1.001 | o | 225 | SW02 | 27.359 | 25.920 | 1.215 | Open Manhole | 1200 |
| 1.002 | o | 225 | SW03 | 27.250 | 25.836 | 1.189 | Open Manhole | 1200 |
| 1.003 | o | 300 | SW04 | 27.265 | 25.628 | 1.337 | Open Manhole | 1200 |
| 1.004 | o | 300 | SW05 | 27.325 | 25.549 | 1.476 | Open Manhole | 1200 |
| 1.005 | o | 300 | SW06 | 27.224 | 25.433 | 1.491 | Open Manhole | 1200 |
| 2.000 | o | 300 | SW07 | 27.510 | 26.310 | 0.900 | Open Manhole | 1200 |
| 2.001 | o | 450 | SW08 | 27.649 | 26.008 | 1.191 | Open Manhole | 1350 |
| 2.002 | o | 450 | SW09 | 27.652 | 25.856 | 1.346 | Open Manhole | 1350 |
| 2.003 | o | 450 | SW10 | 26.754 | 25.500 | 0.804 | Open Manhole | 1350 |
| 1.006 | o | 450 | SW11 | 27.083 | 25.133 | 1.500 | Open Manhole | 1350 |
| 1.007 | o | 450 | SW12 | 27.026 | 25.064 | 1.512 | Open Manhole | 1350 |
| 1.008 | o | 450 | SW13 | 27.115 | 25.000 | 1.665 | Open Manhole | 1350 |
| 3.000 | o | 225 | SW14 | 27.366 | 25.941 | 1.200 | Open Manhole | 1200 |
| 3.001 | o | 225 | SW15 | 27.148 | 25.723 | 1.200 | Open Manhole | 1200 |
| 3.002 | o | 225 | SW16 | 27.088 | 25.663 | 1.200 | Open Manhole | 1200 |

### Downstream Manhole

| PN | Length (m) | Slope (1:X) | MH Name | C.Level (m) | I.Level (m) | D.Depth (m) | MH Connection | MH DIAM., L*W (mm) |
|---|---|---|---|---|---|---|---|---|
| 1.000 | 34.298 | 167.0 | SW02 | 27.359 | 25.920 | 1.215 | Open Manhole | 1200 |
| 1.001 | 14.041 | 167.0 | SW03 | 27.250 | 25.836 | 1.189 | Open Manhole | 1200 |
| 1.002 | 22.191 | 167.0 | SW04 | 27.265 | 25.703 | 1.337 | Open Manhole | 1200 |
| 1.003 | 18.722 | 237.0 | SW05 | 27.325 | 25.549 | 1.476 | Open Manhole | 1200 |
| 1.004 | 27.698 | 238.8 | SW06 | 27.224 | 25.433 | 1.491 | Open Manhole | 1200 |
| 1.005 | 35.735 | 238.0 | SW11 | 27.083 | 25.283 | 1.500 | Open Manhole | 1350 |
| 2.000 | 36.069 | 237.3 | SW08 | 27.649 | 26.158 | 1.191 | Open Manhole | 1350 |
| 2.001 | 36.209 | 238.2 | SW09 | 27.652 | 25.856 | 1.346 | Open Manhole | 1350 |
| 2.002 | 43.198# | 121.3 | SW10 | 26.754 | 25.500 | 0.804 | Open Manhole | 1350 |
| 2.003 | 29.762 | 81.1 | SW11 | 27.083 | 25.133 | 1.500 | Open Manhole | 1350 |
| 1.006 | 26.412 | 382.8 | SW12 | 27.026 | 25.064 | 1.512 | Open Manhole | 1350 |
| 1.007 | 25.562 | 399.4 | SW13 | 27.115 | 25.000 | 1.665 | Open Manhole | 1350 |
| 1.008 | 5.083 | 391.0 | SW23 | 27.000 | 24.987 | 1.563 | Open Manhole | 1350 |
| 3.000 | 35.587 | 163.2 | SW15 | 27.148 | 25.723 | 1.200 | Open Manhole | 1200 |
| 3.001 | 4.962 | 82.7 | SW16 | 27.088 | 25.663 | 1.200 | Open Manhole | 1200 |
| 3.002 | 32.527 | 167.0 | SW17 | 27.198 | 25.468 | 1.505 | Open Manhole | 1200 |

©1982-2020 Innovyze

## PIPELINE SCHEDULES for Northern Network

### Upstream Manhole

| PN | Hyd Sect | Diam (mm) | MH Name | C.Level (m) | I.Level (m) | D.Depth (m) | MH Connection | MH DIAM., L*W (mm) |
|---|---|---|---|---|---|---|---|---|
| 3.003 | o | 300 | SW17 | 27.198 | 25.393 | 1.505 | Open Manhole | 1200 |
| 4.000 | o | 150 | SW18 | 27.887 | 26.537 | 1.200 | Open Manhole | 1200 |
| 4.001 | o | 225 | SW19 | 27.575 | 26.150 | 1.200 | Open Manhole | 1200 |
| 4.002 | o | 225 | SW20 | 27.284 | 25.859 | 1.200 | Open Manhole | 1200 |
| 4.003 | o | 225 | SW21 | 27.081 | 25.656 | 1.200 | Open Manhole | 1200 |
| 3.004 | o | 300 | SW22 | 27.167 | 25.343 | 1.524 | Open Manhole | 1200 |
| 1.009 | o | 450 | SW23 | 27.000 | 24.987 | 1.563 | Open Manhole | 1350 |
| 1.010 | o | 225 | SW24 | 26.650 | 24.203 | 2.222 | Open Manhole | 1350 |

### Downstream Manhole

| PN | Length (m) | Slope (1:X) | MH Name | C.Level (m) | I.Level (m) | D.Depth (m) | MH Connection | MH DIAM., L*W (mm) |
|---|---|---|---|---|---|---|---|---|
| 3.003 | 11.969 | 239.4 | SW22 | 27.167 | 25.343 | 1.524 | Open Manhole | 1200 |
| 4.000 | 20.912 | 67.0 | SW19 | 27.575 | 26.225 | 1.200 | Open Manhole | 1200 |
| 4.001 | 33.085 | 113.7 | SW20 | 27.284 | 25.859 | 1.200 | Open Manhole | 1200 |
| 4.002 | 31.704 | 156.2 | SW21 | 27.081 | 25.656 | 1.200 | Open Manhole | 1200 |
| 4.003 | 7.178 | 30.2 | SW22 | 27.167 | 25.418 | 1.524 | Open Manhole | 1200 |
| 3.004 | 26.116 | 126.8 | SW23 | 27.000 | 25.137 | 1.563 | Open Manhole | 1350 |
| 1.009 | 13.444 | 17.1 | SW24 | 26.650 | 24.203 | 1.997 | Open Manhole | 1350 |
| 1.010 | 8.265 | 99.6 | EX MH40 | 26.720 | 24.120 | 2.375 | Open Manhole | 1500 |

## Simulation Criteria for Northern Network

| | | | |
|---|---|---|---|
| Volumetric Runoff Coeff | 0.840 | Additional Flow - % of Total Flow | 0.000 |
| Areal Reduction Factor | 1.000 | MADD Factor * 10m³/ha Storage | 2.000 |
| Hot Start (mins) | 0 | Inlet Coeffiecient | 0.800 |
| Hot Start Level (mm) | 0 | Flow per Person per Day (l/per/day) | 0.000 |
| Manhole Headloss Coeff (Global) | 0.500 | Run Time (mins) | 60 |
| Foul Sewage per hectare (l/s) | 0.000 | Output Interval (mins) | 1 |

| | | | |
|---|---|---|---|
| Number of Input Hydrographs | 0 | Number of Storage Structures | 13 |
| Number of Online Controls | 2 | Number of Time/Area Diagrams | 1 |
| Number of Offline Controls | 0 | Number of Real Time Controls | 0 |

## Synthetic Rainfall Details

Rainfall Model FEH
Return Period (years) 2

©1982-2020 Innovyze

## Synthetic Rainfall Details

| | |
|---|---|
| FEH Rainfall Version | 1999 |
| Site Location | GB 447800 117600 SU 47800 17600 |
| C (1km) | -0.028 |
| D1 (1km) | 0.423 |
| D2 (1km) | 0.310 |
| D3 (1km) | 0.398 |
| E (1km) | 0.304 |
| F (1km) | 2.288 |
| Summer Storms | Yes |
| Winter Storms | No |
| Cv (Summer) | 0.840 |
| Cv (Winter) | 0.840 |
| Storm Duration (mins) | 30 |

©1982-2020 Innovyze

## Online Controls for Northern Network

### Orifice Manhole: SW21, DS/PN: 4.003, Volume (m³): 2.8

Diameter (m) 0.100 Discharge Coefficient 0.600 Invert Level (m) 25.656

### Hydro-Brake® Optimum Manhole: SW24, DS/PN: 1.010, Volume (m³): 5.4

| | |
|---|---|
| Unit Reference | MD-SHE-0201-2540-2300-2540 |
| Design Head (m) | 2.300 |
| Design Flow (l/s) | 25.4 |
| Flush-Flo™ | Calculated |
| Objective | Minimise upstream storage |
| Application | Surface |
| Sump Available | Yes |
| Diameter (mm) | 201 |
| Invert Level (m) | 24.203 |
| Minimum Outlet Pipe Diameter (mm) | 225 |
| Suggested Manhole Diameter (mm) | 1800 |

| Control Points | Head (m) | Flow (l/s) |
|---|---|---|
| Design Point (Calculated) | 2.300 | 25.4 |
| Flush-Flo™ | 0.670 | 25.4 |
| Kick-Flo® | 1.415 | 20.1 |
| Mean Flow over Head Range | - | 22.1 |

The hydrological calculations have been based on the Head/Discharge relationship for the Hydro-Brake® Optimum as specified. Should another type of control device other than a Hydro-Brake Optimum® be utilised then these storage routing calculations will be invalidated

| Depth (m) | Flow (l/s) | Depth (m) | Flow (l/s) | Depth (m) | Flow (l/s) | Depth (m) | Flow (l/s) |
|---|---|---|---|---|---|---|---|
| 0.100 | 6.9 | 1.200 | 23.3 | 3.000 | 28.8 | 7.000 | 43.3 |
| 0.200 | 19.1 | 1.400 | 20.5 | 3.500 | 31.0 | 7.500 | 44.8 |
| 0.300 | 22.8 | 1.600 | 21.3 | 4.000 | 33.1 | 8.000 | 46.2 |
| 0.400 | 24.2 | 1.800 | 22.6 | 4.500 | 35.0 | 8.500 | 47.6 |
| 0.500 | 25.0 | 2.000 | 23.7 | 5.000 | 36.8 | 9.000 | 48.9 |
| 0.600 | 25.3 | 2.200 | 24.8 | 5.500 | 38.6 | 9.500 | 50.2 |
| 0.800 | 25.3 | 2.400 | 25.9 | 6.000 | 40.2 | | |
| 1.000 | 24.6 | 2.600 | 26.9 | 6.500 | 41.8 | | |

©1982-2020 Innovyze

## Storage Structures for Northern Network

### Porous Car Park Manhole: SW01, DS/PN: 1.000

| | | | |
|---|---|---|---|
| Infiltration Coefficient Base (m/hr) | 0.00000 | Width (m) | 22.0 |
| Membrane Percolation (mm/hr) | 1000 | Length (m) | 43.0 |
| Max Percolation (l/s) | 262.8 | Slope (1:X) | 0.0 |
| Safety Factor | 2.0 | Depression Storage (mm) | 5 |
| Porosity | 0.30 | Evaporation (mm/day) | 3 |
| Invert Level (m) | 26.650 | Membrane Depth (mm) | 0 |

### Porous Car Park Manhole: SW04, DS/PN: 1.003

| | | | |
|---|---|---|---|
| Infiltration Coefficient Base (m/hr) | 0.00000 | Width (m) | 21.0 |
| Membrane Percolation (mm/hr) | 1000 | Length (m) | 29.0 |
| Max Percolation (l/s) | 169.2 | Slope (1:X) | 0.0 |
| Safety Factor | 2.0 | Depression Storage (mm) | 5 |
| Porosity | 0.30 | Evaporation (mm/day) | 3 |
| Invert Level (m) | 26.665 | Membrane Depth (mm) | 0 |

### Porous Car Park Manhole: SW05, DS/PN: 1.004

| | | | |
|---|---|---|---|
| Infiltration Coefficient Base (m/hr) | 0.00000 | Width (m) | 13.0 |
| Membrane Percolation (mm/hr) | 1000 | Length (m) | 33.0 |
| Max Percolation (l/s) | 119.2 | Slope (1:X) | 0.0 |
| Safety Factor | 2.0 | Depression Storage (mm) | 5 |
| Porosity | 0.30 | Evaporation (mm/day) | 3 |
| Invert Level (m) | 26.725 | Membrane Depth (mm) | 0 |

### Porous Car Park Manhole: SW06, DS/PN: 1.005

| | | | |
|---|---|---|---|
| Infiltration Coefficient Base (m/hr) | 0.00000 | Width (m) | 15.0 |
| Membrane Percolation (mm/hr) | 1000 | Length (m) | 35.0 |
| Max Percolation (l/s) | 145.8 | Slope (1:X) | 0.0 |
| Safety Factor | 2.0 | Depression Storage (mm) | 5 |
| Porosity | 0.30 | Evaporation (mm/day) | 3 |
| Invert Level (m) | 26.600 | Membrane Depth (mm) | 0 |

### Tank or Pond Manhole: SW10, DS/PN: 2.003

Invert Level (m) 25.500

| Depth (m) | Area (m²) | Depth (m) | Area (m²) | Depth (m) | Area (m²) |
|---|---|---|---|---|---|
| 0.000 | 77.0 | 0.500 | 172.0 | 1.000 | 293.0 |

### Porous Car Park Manhole: SW12, DS/PN: 1.007

| | | | |
|---|---|---|---|
| Infiltration Coefficient Base (m/hr) | 0.00000 | Safety Factor | 2.0 |
| Membrane Percolation (mm/hr) | 1000 | Porosity | 0.30 |
| Max Percolation (l/s) | 60.0 | Invert Level (m) | 26.400 |

©1982-2020 Innovyze

## Porous Car Park Manhole: SW12, DS/PN: 1.007

| | | | |
|---|---|---|---|
| Width (m) | 8.0 | Depression Storage (mm) | 5 |
| Length (m) | 27.0 | Evaporation (mm/day) | 3 |
| Slope (1:X) | 0.0 | Membrane Depth (mm) | 0 |

## Cellular Storage Manhole: SW13, DS/PN: 1.008

| | | | |
|---|---|---|---|
| Invert Level (m) | 25.000 | Safety Factor | 2.0 |
| Infiltration Coefficient Base (m/hr) | 0.00000 | Porosity | 0.95 |
| Infiltration Coefficient Side (m/hr) | 0.00000 | | |

| Depth (m) | Area (m²) | Inf. Area (m²) | Depth (m) | Area (m²) | Inf. Area (m²) |
|---|---|---|---|---|---|
| 0.000 | 120.0 | 0.0 | 1.000 | 120.0 | 0.0 |
| 0.500 | 120.0 | 0.0 | 1.001 | 0.0 | 0.0 |

## Porous Car Park Manhole: SW16, DS/PN: 3.002

| | | | |
|---|---|---|---|
| Infiltration Coefficient Base (m/hr) | 0.00000 | Width (m) | 10.0 |
| Membrane Percolation (mm/hr) | 1000 | Length (m) | 32.0 |
| Max Percolation (l/s) | 88.9 | Slope (1:X) | 0.0 |
| Safety Factor | 2.0 | Depression Storage (mm) | 5 |
| Porosity | 0.30 | Evaporation (mm/day) | 3 |
| Invert Level (m) | 26.488 | Membrane Depth (mm) | 0 |

## Porous Car Park Manhole: SW19, DS/PN: 4.001

| | | | |
|---|---|---|---|
| Infiltration Coefficient Base (m/hr) | 0.00000 | Width (m) | 10.0 |
| Membrane Percolation (mm/hr) | 1000 | Length (m) | 18.0 |
| Max Percolation (l/s) | 50.0 | Slope (1:X) | 0.0 |
| Safety Factor | 2.0 | Depression Storage (mm) | 5 |
| Porosity | 0.30 | Evaporation (mm/day) | 3 |
| Invert Level (m) | 26.975 | Membrane Depth (mm) | 0 |

## Porous Car Park Manhole: SW20, DS/PN: 4.002

| | | | |
|---|---|---|---|
| Infiltration Coefficient Base (m/hr) | 0.00000 | Width (m) | 10.0 |
| Membrane Percolation (mm/hr) | 1000 | Length (m) | 28.0 |
| Max Percolation (l/s) | 77.8 | Slope (1:X) | 0.0 |
| Safety Factor | 2.0 | Depression Storage (mm) | 5 |
| Porosity | 0.30 | Evaporation (mm/day) | 3 |
| Invert Level (m) | 26.684 | Membrane Depth (mm) | 0 |

## Porous Car Park Manhole: SW21, DS/PN: 4.003

| | | | |
|---|---|---|---|
| Infiltration Coefficient Base (m/hr) | 0.00000 | Width (m) | 10.0 |
| Membrane Percolation (mm/hr) | 1000 | Length (m) | 25.0 |
| Max Percolation (l/s) | 69.4 | Slope (1:X) | 0.0 |
| Safety Factor | 2.0 | Depression Storage (mm) | 5 |
| Porosity | 0.30 | Evaporation (mm/day) | 3 |
| Invert Level (m) | 26.481 | Membrane Depth (mm) | 0 |

©1982-2020 Innovyze

## Porous Car Park Manhole: SW22, DS/PN: 3.004

| | | | |
|---|---|---|---|
| Infiltration Coefficient Base (m/hr) | 0.00000 | Width (m) | 6.0 |
| Membrane Percolation (mm/hr) | 1000 | Length (m) | 10.0 |
| Max Percolation (l/s) | 16.7 | Slope (1:X) | 0.0 |
| Safety Factor | 2.0 | Depression Storage (mm) | 5 |
| Porosity | 0.30 | Evaporation (mm/day) | 3 |
| Invert Level (m) | 26.567 | Membrane Depth (mm) | 0 |

## Cellular Storage Manhole: SW24, DS/PN: 1.010

| | | | |
|---|---|---|---|
| Invert Level (m) | 24.206 | Safety Factor | 2.0 |
| Infiltration Coefficient Base (m/hr) | 0.00000 | Porosity | 0.95 |
| Infiltration Coefficient Side (m/hr) | 0.00000 | | |

| Depth (m) | Area (m²) | Inf. Area (m²) | Depth (m) | Area (m²) | Inf. Area (m²) |
|---|---|---|---|---|---|
| 0.000 | 260.0 | 0.0 | 1.000 | 260.0 | 0.0 |
| 0.500 | 260.0 | 0.0 | 1.001 | 0.0 | 0.0 |

## Time Area Diagram at Pipe Number 2.002 for Northern Network

Total Area (ha) 0.055

| Time (mins) From: | To: | Area (ha) | Time (mins) From: | To: | Area (ha) | Time (mins) From: | To: | Area (ha) | Time (mins) From: | To: | Area (ha) |
|---|---|---|---|---|---|---|---|---|---|---|---|
| 0 | 2 | 0.000 | 6 | 8 | 0.000 | 12 | 14 | 0.011 | 18 | 20 | 0.011 |
| 2 | 4 | 0.000 | 8 | 10 | 0.000 | 14 | 16 | 0.011 | | | |
| 4 | 6 | 0.000 | 10 | 12 | 0.011 | 16 | 18 | 0.011 | | | |

©1982-2020 Innovyze

## 2 year Return Period Summary of Critical Results by Maximum Level (Rank 1) for Northern Network

### Simulation Criteria

Areal Reduction Factor 1.000 Additional Flow - % of Total Flow 0.000
Hot Start (mins) 0 MADD Factor * 10m³/ha Storage 2.000
Hot Start Level (mm) 0 Inlet Coeffiecient 0.800
Manhole Headloss Coeff (Global) 0.500 Flow per Person per Day (l/per/day) 0.000
Foul Sewage per hectare (l/s) 0.000

Number of Input Hydrographs 0 Number of Storage Structures 13
Number of Online Controls 2 Number of Time/Area Diagrams 1
Number of Offline Controls 0 Number of Real Time Controls 0

### Synthetic Rainfall Details

Rainfall Model FEH
FEH Rainfall Version 2013
Site Location GB 447800 117600 SU 47800 17600
Data Type Catchment
Cv (Summer) 0.840
Cv (Winter) 0.840

Margin for Flood Risk Warning (mm) 300.0
Analysis Timestep 2.5 Second Increment (Extended)
DTS Status OFF
DVD Status ON
Inertia Status ON

Profile(s) Summer and Winter
Duration(s) (mins) 15, 30, 60, 120, 240, 360, 480, 960, 1440
Return Period(s) (years) 2, 30, 100
Climate Change (%) 0, 0, 40

| PN | US/MH Name | Storm | Return Period | Climate Change | First (X) Surcharge | First (Y) Flood | First (Z) Overflow | Overflow Act. | Water Level (m) |
|---|---|---|---|---|---|---|---|---|---|
| 1.000 | SW01 | 15 Summer | 2 | +0% | 30/15 Summer | | | | 26.246 |
| 1.001 | SW02 | 30 Summer | 2 | +0% | 30/15 Summer | | | | 26.053 |
| 1.002 | SW03 | 30 Summer | 2 | +0% | 30/15 Summer | | | | 25.981 |
| 1.003 | SW04 | 30 Summer | 2 | +0% | 30/15 Summer | | | | 25.791 |
| 1.004 | SW05 | 30 Summer | 2 | +0% | 30/15 Summer | | | | 25.737 |
| 1.005 | SW06 | 30 Summer | 2 | +0% | 30/15 Summer | | | | 25.643 |
| 2.000 | SW07 | 15 Summer | 2 | +0% | 100/15 Summer | | | | 26.439 |
| 2.001 | SW08 | 15 Summer | 2 | +0% | | | | | 26.154 |
| 2.002 | SW09 | 15 Summer | 2 | +0% | 100/60 Summer | | | | 25.975 |
| 2.003 | SW10 | 30 Summer | 2 | +0% | 100/60 Summer | | | | 25.601 |
| 1.006 | SW11 | 30 Summer | 2 | +0% | 30/15 Summer | | | | 25.412 |
| 1.007 | SW12 | 30 Summer | 2 | +0% | 30/15 Summer | | | | 25.339 |
| 1.008 | SW13 | 60 Summer | 2 | +0% | 30/30 Summer | | | | 25.244 |
| 3.000 | SW14 | 15 Summer | 2 | +0% | 100/15 Summer | | | | 26.024 |
| 3.001 | SW15 | 15 Summer | 2 | +0% | 30/15 Summer | | | | 25.832 |
| 3.002 | SW16 | 15 Summer | 2 | +0% | 30/15 Summer | | | | 25.794 |

©1982-2020 Innovyze

## 2 year Return Period Summary of Critical Results by Maximum Level (Rank 1) for Northern Network

| PN | US/MH Name | Surcharged Depth (m) | Flooded Volume (m³) | Flow / Cap. | Overflow (l/s) | Half Drain Time (mins) | Pipe Flow (l/s) | Status | Level Exceeded |
|---|---|---|---|---|---|---|---|---|---|
| 1.000 | SW01 | -0.104 | 0.000 | 0.42 | | 5 | 15.8 | OK | |
| 1.001 | SW02 | -0.091 | 0.000 | 0.65 | | | 22.9 | OK | |
| 1.002 | SW03 | -0.080 | 0.000 | 0.73 | | | 26.6 | OK | |
| 1.003 | SW04 | -0.136 | 0.000 | 0.55 | | 5 | 34.1 | OK | |
| 1.004 | SW05 | -0.111 | 0.000 | 0.70 | | 5 | 45.3 | OK | |
| 1.005 | SW06 | -0.090 | 0.000 | 0.81 | | 5 | 53.9 | OK | |
| 2.000 | SW07 | -0.171 | 0.000 | 0.38 | | | 25.4 | OK | |
| 2.001 | SW08 | -0.304 | 0.000 | 0.23 | | | 41.8 | OK | |
| 2.002 | SW09 | -0.331 | 0.000 | 0.16 | | | 40.8 | OK | |
| 2.003 | SW10 | -0.349 | 0.000 | 0.11 | | | 34.9 | OK | |
| 1.006 | SW11 | -0.171 | 0.000 | 0.64 | | | 88.7 | OK | |
| 1.007 | SW12 | -0.175 | 0.000 | 0.68 | | 11 | 92.3 | OK | |
| 1.008 | SW13 | -0.206 | 0.000 | 0.57 | | 23 | 65.7 | OK | |
| 3.000 | SW14 | -0.142 | 0.000 | 0.29 | | | 10.9 | OK | |
| 3.001 | SW15 | -0.116 | 0.000 | 0.46 | | | 16.0 | OK | |
| 3.002 | SW16 | -0.094 | 0.000 | 0.59 | | 7 | 22.4 | OK | |

©1982-2020 Innovyze

## 2 year Return Period Summary of Critical Results by Maximum Level (Rank 1) for Northern Network

| PN | US/MH Name | Storm | Return Period | Climate Change | First (X) Surcharge | First (Y) Flood | First (Z) Overflow | Overflow Act. | Water Level (m) |
|---|---|---|---|---|---|---|---|---|---|
| 3.003 | SW17 | 15 Summer | 2 | +0% | 100/15 Summer | | | | 25.538 |
| 4.000 | SW18 | 15 Summer | 2 | +0% | 30/15 Summer | | | | 26.590 |
| 4.001 | SW19 | 15 Summer | 2 | +0% | 30/15 Summer | | | | 26.222 |
| 4.002 | SW20 | 30 Summer | 2 | +0% | 2/15 Summer | | | | 26.190 |
| 4.003 | SW21 | 30 Summer | 2 | +0% | 2/15 Summer | | | | 26.168 |
| 3.004 | SW22 | 30 Summer | 2 | +0% | 100/15 Summer | | | | 25.483 |
| 1.009 | SW23 | 60 Summer | 2 | +0% | 100/15 Summer | | | | 25.117 |
| 1.010 | SW24 | 240 Summer | 2 | +0% | 2/30 Summer | | | | 24.661 |

| PN | US/MH Name | Surcharged Depth (m) | Flooded Volume (m³) | Flow / Cap. | Overflow (l/s) | Half Drain Time (mins) | Pipe Flow (l/s) | Status | Level Exceeded |
|---|---|---|---|---|---|---|---|---|---|
| 3.003 | SW17 | -0.155 | 0.000 | 0.46 | | | 26.6 | OK | |
| 4.000 | SW18 | -0.097 | 0.000 | 0.27 | | | 5.5 | OK | |
| 4.001 | SW19 | -0.153 | 0.000 | 0.21 | | 7 | 9.7 | OK | |
| 4.002 | SW20 | 0.106 | 0.000 | 0.30 | | 5 | 11.6 | SURCHARGED | |
| 4.003 | SW21 | 0.287 | 0.000 | 0.21 | | 10 | 14.2 | SURCHARGED | |
| 3.004 | SW22 | -0.160 | 0.000 | 0.45 | | 10 | 39.4 | OK | |
| 1.009 | SW23 | -0.320 | 0.000 | 0.18 | | | 92.1 | OK | |
| 1.010 | SW24 | 0.233 | 0.000 | 0.61 | | 82 | 24.8 | SURCHARGED | |

©1982-2020 Innovyze

## 30 year Return Period Summary of Critical Results by Maximum Level (Rank 1) for Northern Network

### Simulation Criteria

Areal Reduction Factor 1.000 Additional Flow - % of Total Flow 0.000
Hot Start (mins) 0 MADD Factor * 10m³/ha Storage 2.000
Hot Start Level (mm) 0 Inlet Coeffiecient 0.800
Manhole Headloss Coeff (Global) 0.500 Flow per Person per Day (l/per/day) 0.000
Foul Sewage per hectare (l/s) 0.000

Number of Input Hydrographs 0 Number of Storage Structures 13
Number of Online Controls 2 Number of Time/Area Diagrams 1
Number of Offline Controls 0 Number of Real Time Controls 0

### Synthetic Rainfall Details

Rainfall Model FEH
FEH Rainfall Version 2013
Site Location GB 447800 117600 SU 47800 17600
Data Type Catchment
Cv (Summer) 0.840
Cv (Winter) 0.840

Margin for Flood Risk Warning (mm) 300.0
Analysis Timestep 2.5 Second Increment (Extended)
DTS Status OFF
DVD Status ON
Inertia Status ON

Profile(s) Summer and Winter
Duration(s) (mins) 15, 30, 60, 120, 240, 360, 480, 960, 1440
Return Period(s) (years) 2, 30, 100
Climate Change (%) 0, 0, 40

WARNING: Half Drain Time has not been calculated as the structure is too full.

| PN | US/MH Name | Storm | Return Period | Climate Change | First (X) Surcharge | First (Y) Flood | First (Z) Overflow | Overflow Act. | Water Level (m) |
|---|---|---|---|---|---|---|---|---|---|
| 1.000 | SW01 | 30 Summer | 30 | +0% | 30/15 Summer | | | | 26.658 |
| 1.001 | SW02 | 15 Summer | 30 | +0% | 30/15 Summer | | | | 26.636 |
| 1.002 | SW03 | 30 Summer | 30 | +0% | 30/15 Summer | | | | 26.561 |
| 1.003 | SW04 | 15 Summer | 30 | +0% | 30/15 Summer | | | | 26.389 |
| 1.004 | SW05 | 15 Summer | 30 | +0% | 30/15 Summer | | | | 26.308 |
| 1.005 | SW06 | 30 Summer | 30 | +0% | 30/15 Summer | | | | 26.095 |
| 2.000 | SW07 | 15 Summer | 30 | +0% | 100/15 Summer | | | | 26.515 |
| 2.001 | SW08 | 15 Summer | 30 | +0% | | | | | 26.246 |
| 2.002 | SW09 | 15 Summer | 30 | +0% | 100/60 Summer | | | | 26.045 |
| 2.003 | SW10 | 30 Summer | 30 | +0% | 100/60 Summer | | | | 25.695 |
| 1.006 | SW11 | 30 Summer | 30 | +0% | 30/15 Summer | | | | 25.653 |
| 1.007 | SW12 | 30 Summer | 30 | +0% | 30/15 Summer | | | | 25.546 |
| 1.008 | SW13 | 60 Summer | 30 | +0% | 30/30 Summer | | | | 25.453 |

©1982-2020 Innovyze

## 30 year Return Period Summary of Critical Results by Maximum Level (Rank 1) for Northern Network

| PN | US/MH Name | Surcharged Depth (m) | Flooded Volume (m³) | Flow / Cap. | Overflow (l/s) | Half Drain Time (mins) | Pipe Flow (l/s) | Status | Level Exceeded |
|---|---|---|---|---|---|---|---|---|---|
| 1.000 | SW01 | 0.308 | 0.000 | 0.94 | | 4 | 35.4 | SURCHARGED | |
| 1.001 | SW02 | 0.491 | 0.000 | 1.16 | | | 40.5 | SURCHARGED | |
| 1.002 | SW03 | 0.500 | 0.000 | 1.27 | | | 46.4 | SURCHARGED | |
| 1.003 | SW04 | 0.462 | 0.000 | 0.96 | | 7 | 59.9 | SURCHARGED | |
| 1.004 | SW05 | 0.460 | 0.000 | 1.37 | | 7 | 88.5 | SURCHARGED | |
| 1.005 | SW06 | 0.362 | 0.000 | 1.71 | | 10 | 113.0 | SURCHARGED | |
| 2.000 | SW07 | -0.095 | 0.000 | 0.79 | | | 52.1 | OK | |
| 2.001 | SW08 | -0.212 | 0.000 | 0.52 | | | 95.8 | OK | |
| 2.002 | SW09 | -0.261 | 0.000 | 0.36 | | | 95.8 | OK | |
| 2.003 | SW10 | -0.255 | 0.000 | 0.21 | | | 63.6 | OK | |
| 1.006 | SW11 | 0.070 | 0.000 | 1.24 | | | 172.3 | SURCHARGED | |
| 1.007 | SW12 | 0.032 | 0.000 | 1.34 | | 18 | 181.2 | SURCHARGED | |
| 1.008 | SW13 | 0.003 | 0.000 | 1.32 | | 42 | 151.8 | SURCHARGED | |

©1982-2020 Innovyze

## 30 year Return Period Summary of Critical Results by Maximum Level (Rank 1) for Northern Network

| PN | US/MH Name | Storm | Return Period | Climate Change | First (X) Surcharge | First (Y) Flood | First (Z) Overflow | Overflow Act. | Water Level (m) |
|---|---|---|---|---|---|---|---|---|---|
| 3.000 | SW14 | 15 Summer | 30 | +0% | 100/15 Summer | | | | 26.160 |
| 3.001 | SW15 | 15 Summer | 30 | +0% | 30/15 Summer | | | | 26.104 |
| 3.002 | SW16 | 15 Summer | 30 | +0% | 30/15 Summer | | | | 26.023 |
| 3.003 | SW17 | 15 Summer | 30 | +0% | 100/15 Summer | | | | 25.640 |
| 4.000 | SW18 | 15 Summer | 30 | +0% | 30/15 Summer | | | | 26.795 |
| 4.001 | SW19 | 15 Summer | 30 | +0% | 30/15 Summer | | | | 26.737 |
| 4.002 | SW20 | 15 Summer | 30 | +0% | 2/15 Summer | | | | 26.684 |
| 4.003 | SW21 | 30 Summer | 30 | +0% | 2/15 Summer | | | | 26.584 |
| 3.004 | SW22 | 15 Summer | 30 | +0% | 100/15 Summer | | | | 25.567 |
| 1.009 | SW23 | 120 Summer | 30 | +0% | 100/15 Summer | | | | 25.363 |
| 1.010 | SW24 | 120 Summer | 30 | +0% | 2/30 Summer | | | | 25.353 |

| PN | US/MH Name | Surcharged Depth (m) | Flooded Volume ($m^3$) | Flow / Cap. | Overflow (l/s) | Half Drain Time (mins) | Pipe Flow (l/s) | Status | Level Exceeded |
|---|---|---|---|---|---|---|---|---|---|
| 3.000 | SW14 | -0.006 | 0.000 | 0.56 | | | 21.6 | OK | |
| 3.001 | SW15 | 0.156 | 0.000 | 0.91 | | | 31.3 | SURCHARGED | |
| 3.002 | SW16 | 0.135 | 0.000 | 1.28 | | 3 | 48.2 | SURCHARGED | |
| 3.003 | SW17 | -0.053 | 0.000 | 0.99 | | | 57.3 | OK | |
| 4.000 | SW18 | 0.108 | 0.000 | 0.52 | | | 10.7 | SURCHARGED | |
| 4.001 | SW19 | 0.362 | 0.000 | 0.41 | | 13 | 18.6 | SURCHARGED | |
| 4.002 | SW20 | 0.600 | 0.000 | 0.82 | | 15 | 31.8 | SURCHARGED | |
| 4.003 | SW21 | 0.703 | 0.000 | 0.28 | | 11 | 19.6 | SURCHARGED | |
| 3.004 | SW22 | -0.076 | 0.000 | 0.90 | | 6 | 79.8 | OK | |
| 1.009 | SW23 | -0.074 | 0.000 | 0.32 | | | 161.2 | OK | |
| 1.010 | SW24 | 0.925 | 0.000 | 0.63 | | | 25.4 | SURCHARGED | |

©1982-2020 Innovyze

## 100 year Return Period Summary of Critical Results by Maximum Level (Rank 1) for Northern Network

### Simulation Criteria

Areal Reduction Factor 1.000 Additional Flow - % of Total Flow 0.000
Hot Start (mins) 0 MADD Factor * 10m³/ha Storage 2.000
Hot Start Level (mm) 0 Inlet Coeffiecient 0.800
Manhole Headloss Coeff (Global) 0.500 Flow per Person per Day (l/per/day) 0.000
Foul Sewage per hectare (l/s) 0.000

Number of Input Hydrographs 0 Number of Storage Structures 13
Number of Online Controls 2 Number of Time/Area Diagrams 1
Number of Offline Controls 0 Number of Real Time Controls 0

### Synthetic Rainfall Details

Rainfall Model FEH
FEH Rainfall Version 2013
Site Location GB 447800 117600 SU 47800 17600
Data Type Catchment
Cv (Summer) 0.840
Cv (Winter) 0.840

Margin for Flood Risk Warning (mm) 300.0
Analysis Timestep 2.5 Second Increment (Extended)
DTS Status OFF
DVD Status ON
Inertia Status ON

Profile(s) Summer and Winter
Duration(s) (mins) 15, 30, 60, 120, 240, 360, 480, 960, 1440
Return Period(s) (years) 2, 30, 100
Climate Change (%) 0, 0, 40

WARNING: Half Drain Time has not been calculated as the structure is too full.

| PN | US/MH Name | Storm | Return Period | Climate Change | First (X) Surcharge | First (Y) Flood | First (Z) Overflow | Overflow Act. | Water Level (m) |
|---|---|---|---|---|---|---|---|---|---|
| 1.000 | SW01 | 30 Summer | 100 | +40% | 30/15 Summer | | | | 26.752 |
| 1.001 | SW02 | 15 Summer | 100 | +40% | 30/15 Summer | | | | 26.925 |
| 1.002 | SW03 | 15 Summer | 100 | +40% | 30/15 Summer | | | | 26.900 |
| 1.003 | SW04 | 15 Summer | 100 | +40% | 30/15 Summer | | | | 26.715 |
| 1.004 | SW05 | 15 Summer | 100 | +40% | 30/15 Summer | | | | 26.701 |
| 1.005 | SW06 | 15 Summer | 100 | +40% | 30/15 Summer | | | | 26.507 |
| 2.000 | SW07 | 15 Summer | 100 | +40% | 100/15 Summer | | | | 26.745 |
| 2.001 | SW08 | 120 Winter | 100 | +40% | | | | | 26.458 |
| 2.002 | SW09 | 120 Winter | 100 | +40% | 100/60 Summer | | | | 26.453 |
| 2.003 | SW10 | 120 Winter | 100 | +40% | 100/60 Summer | | | | 26.451 |
| 1.006 | SW11 | 120 Winter | 100 | +40% | 30/15 Summer | | | | 26.453 |
| 1.007 | SW12 | 120 Winter | 100 | +40% | 30/15 Summer | | | | 26.451 |
| 1.008 | SW13 | 120 Winter | 100 | +40% | 30/30 Summer | | | | 26.461 |

©1982-2020 Innovyze

## 100 year Return Period Summary of Critical Results by Maximum Level (Rank 1) for Northern Network

| PN | US/MH Name | Surcharged Depth (m) | Flooded Volume (m³) | Flow / Cap. | Overflow (l/s) | Half Drain Time (mins) | Pipe Flow (l/s) | Status | Level Exceeded |
|---|---|---|---|---|---|---|---|---|---|
| 1.000 | SW01 | 0.402 | 0.000 | 1.19 | | 9 | 45.1 | SURCHARGED | |
| 1.001 | SW02 | 0.780 | 0.000 | 1.43 | | | 50.1 | SURCHARGED | |
| 1.002 | SW03 | 0.839 | 0.000 | 1.37 | | | 50.2 | SURCHARGED | |
| 1.003 | SW04 | 0.787 | 0.000 | 0.97 | | 5 | 60.5 | SURCHARGED | |
| 1.004 | SW05 | 0.852 | 0.000 | 1.37 | | 10 | 88.7 | SURCHARGED | |
| 1.005 | SW06 | 0.774 | 0.000 | 2.25 | | 14 | 148.5 | SURCHARGED | |
| 2.000 | SW07 | 0.135 | 0.000 | 1.35 | | | 89.2 | SURCHARGED | |
| 2.001 | SW08 | 0.000 | 0.000 | 0.26 | | | 47.0 | OK | |
| 2.002 | SW09 | 0.147 | 0.000 | 0.21 | | | 54.9 | SURCHARGED | |
| 2.003 | SW10 | 0.501 | 0.000 | 0.18 | | | 56.9 | SURCHARGED | |
| 1.006 | SW11 | 0.870 | 0.000 | 1.02 | | | 141.4 | SURCHARGED | |
| 1.007 | SW12 | 0.937 | 0.000 | 1.11 | | | 149.9 | SURCHARGED | |
| 1.008 | SW13 | 1.011 | 0.000 | 1.34 | | | 153.9 | SURCHARGED | |

©1982-2020 Innovyze

## 100 year Return Period Summary of Critical Results by Maximum Level (Rank 1) for Northern Network

| PN | US/MH Name | Storm | Return Period | Climate Change | First (X) Surcharge | First (Y) Flood | First (Z) Overflow | Overflow Act. | Water Level (m) |
|---|---|---|---|---|---|---|---|---|---|
| 3.000 | SW14 | 15 Summer | 100 | +40% | 100/15 Summer | | | | 26.888 |
| 3.001 | SW15 | 15 Summer | 100 | +40% | 30/15 Summer | | | | 26.668 |
| 3.002 | SW16 | 15 Summer | 100 | +40% | 30/15 Summer | | | | 26.510 |
| 3.003 | SW17 | 120 Winter | 100 | +40% | 100/15 Summer | | | | 26.481 |
| 4.000 | SW18 | 15 Summer | 100 | +40% | 30/15 Summer | | | | 27.192 |
| 4.001 | SW19 | 15 Summer | 100 | +40% | 30/15 Summer | | | | 26.944 |
| 4.002 | SW20 | 30 Summer | 100 | +40% | 2/15 Summer | | | | 26.786 |
| 4.003 | SW21 | 60 Summer | 100 | +40% | 2/15 Summer | | | | 26.740 |
| 3.004 | SW22 | 120 Winter | 100 | +40% | 100/15 Summer | | | | 26.478 |
| 1.009 | SW23 | 120 Winter | 100 | +40% | 100/15 Summer | | | | 26.464 |
| 1.010 | SW24 | 120 Winter | 100 | +40% | 2/30 Summer | | | | 26.461 |

| PN | US/MH Name | Surcharged Depth (m) | Flooded Volume (m³) | Flow / Cap. | Overflow (l/s) | Half Drain Time (mins) | Pipe Flow (l/s) | Status | Level Exceeded |
|---|---|---|---|---|---|---|---|---|---|
| 3.000 | SW14 | 0.722 | 0.000 | 0.92 | | | 35.1 | SURCHARGED | |
| 3.001 | SW15 | 0.720 | 0.000 | 1.63 | | | 56.1 | SURCHARGED | |
| 3.002 | SW16 | 0.622 | 0.000 | 1.88 | | 3 | 70.9 | SURCHARGED | |
| 3.003 | SW17 | 0.788 | 0.000 | 0.58 | | | 33.7 | SURCHARGED | |
| 4.000 | SW18 | 0.505 | 0.000 | 0.88 | | | 18.0 | SURCHARGED | |
| 4.001 | SW19 | 0.569 | 0.000 | 0.83 | | 27 | 38.0 | SURCHARGED | |
| 4.002 | SW20 | 0.702 | 0.000 | 0.87 | | 15 | 33.7 | SURCHARGED | |
| 4.003 | SW21 | 0.859 | 0.000 | 0.31 | | 39 | 21.1 | SURCHARGED | |
| 3.004 | SW22 | 0.835 | 0.000 | 0.62 | | | 55.2 | SURCHARGED | |
| 1.009 | SW23 | 1.027 | 0.000 | 0.41 | | | 203.7 | SURCHARGED | |
| 1.010 | SW24 | 2.033 | 0.000 | 0.63 | | | 25.4 | FLOOD RISK | |

©1982-2020 Innovyze

## 100 year Return Period Summary of Critical Results by Maximum Level (Rank 1) for Northern Network

### Simulation Criteria

| | | | |
|---|---|---|---|
| Areal Reduction Factor | 1.000 | Additional Flow - % of Total Flow | 0.000 |
| Hot Start (mins) | 0 | MADD Factor * 10m³/ha Storage | 2.000 |
| Hot Start Level (mm) | 0 | Inlet Coeffiecient | 0.800 |
| Manhole Headloss Coeff (Global) | 0.500 | Flow per Person per Day (l/per/day) | 0.000 |
| Foul Sewage per hectare (l/s) | 0.000 | | |

| | | | |
|---|---|---|---|
| Number of Input Hydrographs | 0 | Number of Storage Structures | 13 |
| Number of Online Controls | 2 | Number of Time/Area Diagrams | 1 |
| Number of Offline Controls | 0 | Number of Real Time Controls | 0 |

### Synthetic Rainfall Details

| | |
|---|---|
| Rainfall Model | FEH |
| FEH Rainfall Version | 2013 |
| Site Location | GB 447800 117600 SU 47800 17600 |
| Data Type | Catchment |
| Cv (Summer) | 0.840 |
| Cv (Winter) | 0.840 |

| | |
|---|---|
| Margin for Flood Risk Warning (mm) | 300.0 |
| Analysis Timestep | 2.5 Second Increment (Extended) |
| DTS Status | OFF |
| DVD Status | ON |
| Inertia Status | ON |

| | |
|---|---|
| Profile(s) | Summer and Winter |
| Duration(s) (mins) | 15, 30, 60, 120, 240, 360, 480, 960, 1440 |
| Return Period(s) (years) | 100 |
| Climate Change (%) | 45 |

WARNING: Half Drain Time has not been calculated as the structure is too full.

| PN | US/MH Name | Storm | Return Period | Climate Change | First (X) Surcharge | First (Y) Flood | First (Z) Overflow | Overflow Act. | Water Level (m) |
|---|---|---|---|---|---|---|---|---|---|
| 1.000 | SW01 | 30 Summer | 100 | +45% | 100/15 Summer | | | | 26.759 |
| 1.001 | SW02 | 15 Summer | 100 | +45% | 100/15 Summer | | | | 26.911 |
| 1.002 | SW03 | 15 Summer | 100 | +45% | 100/15 Summer | | | | 26.898 |
| 1.003 | SW04 | 15 Summer | 100 | +45% | 100/15 Summer | | | | 26.722 |
| 1.004 | SW05 | 15 Summer | 100 | +45% | 100/15 Summer | | | | 26.708 |
| 1.005 | SW06 | 120 Winter | 100 | +45% | 100/15 Summer | | | | 26.519 |
| 2.000 | SW07 | 15 Summer | 100 | +45% | 100/15 Summer | | | | 26.767 |
| 2.001 | SW08 | 120 Winter | 100 | +45% | 100/120 Summer | | | | 26.507 |
| 2.002 | SW09 | 120 Winter | 100 | +45% | 100/60 Summer | | | | 26.506 |
| 2.003 | SW10 | 120 Winter | 100 | +45% | 100/30 Summer | | | | 26.504 |
| 1.006 | SW11 | 120 Winter | 100 | +45% | 100/15 Summer | | | | 26.505 |
| 1.007 | SW12 | 120 Winter | 100 | +45% | 100/15 Summer | | | | 26.502 |
| 1.008 | SW13 | 120 Winter | 100 | +45% | 100/15 Summer | | | | 26.513 |

©1982-2020 Innovyze

100 year Return Period Summary of Critical Results by Maximum Level (Rank 1) for Northern Network

| PN | US/MH Name | Surcharged Depth (m) | Flooded Volume (m³) | Flow / Cap. | Overflow (l/s) | Half Drain Time (mins) | Pipe Flow (l/s) | Status | Level Exceeded |
|---|---|---|---|---|---|---|---|---|---|
| 1.000 | SW01 | 0.409 | 0.000 | 1.19 | | 9 | 44.8 | SURCHARGED | |
| 1.001 | SW02 | 0.767 | 0.000 | 1.44 | | | 50.4 | SURCHARGED | |
| 1.002 | SW03 | 0.837 | 0.000 | 1.38 | | | 50.5 | SURCHARGED | |
| 1.003 | SW04 | 0.795 | 0.000 | 0.99 | | 5 | 61.4 | SURCHARGED | |
| 1.004 | SW05 | 0.859 | 0.000 | 1.39 | | 10 | 90.0 | SURCHARGED | |
| 1.005 | SW06 | 0.786 | 0.000 | 1.27 | | | 84.3 | SURCHARGED | |
| 2.000 | SW07 | 0.157 | 0.000 | 1.39 | | | 92.3 | SURCHARGED | |
| 2.001 | SW08 | 0.049 | 0.000 | 0.27 | | | 48.7 | SURCHARGED | |
| 2.002 | SW09 | 0.200 | 0.000 | 0.22 | | | 56.8 | SURCHARGED | |
| 2.003 | SW10 | 0.554 | 0.000 | 0.19 | | | 57.7 | FLOOD RISK | |
| 1.006 | SW11 | 0.922 | 0.000 | 1.04 | | | 144.9 | SURCHARGED | |
| 1.007 | SW12 | 0.988 | 0.000 | 1.14 | | 37 | 153.6 | SURCHARGED | |
| 1.008 | SW13 | 1.063 | 0.000 | 1.36 | | | 156.5 | SURCHARGED | |

©1982-2020 Innovyze

## 100 year Return Period Summary of Critical Results by Maximum Level (Rank 1) for Northern Network

| PN | US/MH Name | Storm | Return Period | Climate Change | First (X) Surcharge | First (Y) Flood | First (Z) Overflow | Overflow Act. | Water Level (m) |
|---|---|---|---|---|---|---|---|---|---|
| 3.000 | SW14 | 15 Summer | 100 | +45% | 100/15 Summer | | | | 26.925 |
| 3.001 | SW15 | 15 Summer | 100 | +45% | 100/15 Summer | | | | 26.687 |
| 3.002 | SW16 | 15 Summer | 100 | +45% | 100/15 Summer | | | | 26.517 |
| 3.003 | SW17 | 120 Winter | 100 | +45% | 100/15 Summer | | | | 26.523 |
| 4.000 | SW18 | 15 Summer | 100 | +45% | 100/15 Summer | | | | 27.227 |
| 4.001 | SW19 | 15 Summer | 100 | +45% | 100/15 Summer | | | | 26.963 |
| 4.002 | SW20 | 30 Summer | 100 | +45% | 100/15 Summer | | | | 26.797 |
| 4.003 | SW21 | 60 Summer | 100 | +45% | 100/15 Summer | | | | 26.755 |
| 3.004 | SW22 | 120 Winter | 100 | +45% | 100/15 Summer | | | | 26.523 |
| 1.009 | SW23 | 120 Winter | 100 | +45% | 100/15 Summer | | | | 26.513 |
| 1.010 | SW24 | 120 Winter | 100 | +45% | 100/15 Summer | | | | 26.505 |

| PN | US/MH Name | Surcharged Depth (m) | Flooded Volume (m³) | Flow / Cap. | Overflow (l/s) | Half Drain Time (mins) | Pipe Flow (l/s) | Status | Level Exceeded |
|---|---|---|---|---|---|---|---|---|---|
| 3.000 | SW14 | 0.759 | 0.000 | 0.96 | | | 36.8 | SURCHARGED | |
| 3.001 | SW15 | 0.739 | 0.000 | 1.70 | | | 58.6 | SURCHARGED | |
| 3.002 | SW16 | 0.629 | 0.000 | 1.89 | | 3 | 71.1 | SURCHARGED | |
| 3.003 | SW17 | 0.830 | 0.000 | 0.60 | | | 34.8 | SURCHARGED | |
| 4.000 | SW18 | 0.540 | 0.000 | 0.91 | | | 18.6 | SURCHARGED | |
| 4.001 | SW19 | 0.588 | 0.000 | 0.86 | | 28 | 39.3 | SURCHARGED | |
| 4.002 | SW20 | 0.713 | 0.000 | 0.87 | | 16 | 33.8 | SURCHARGED | |
| 4.003 | SW21 | 0.874 | 0.000 | 0.31 | | 41 | 21.2 | SURCHARGED | |
| 3.004 | SW22 | 0.880 | 0.000 | 0.64 | | | 56.6 | SURCHARGED | |
| 1.009 | SW23 | 1.076 | 0.000 | 0.42 | | | 211.7 | SURCHARGED | |
| 1.010 | SW24 | 2.077 | 0.000 | 0.63 | | | 25.4 | FLOOD RISK | |

©1982-2020 Innovyze

# Appendix G MicroDrainage Calculations Southern Network

## STORM SEWER DESIGN by the Modified Rational Method

### Design Criteria for Southern Network

Pipe Sizes STANDARD Manhole Sizes STANDARD

| | |
|---|---|
| FEH Rainfall Model | |
| Return Period (years) | 2 |
| FEH Rainfall Version | 1999 |
| Site Location | GB 447800 117600 SU 47800 17600 |
| C (1km) | -0.028 |
| D1 (1km) | 0.423 |
| D2 (1km) | 0.310 |
| D3 (1km) | 0.398 |
| E (1km) | 0.304 |
| F (1km) | 2.288 |
| Maximum Rainfall (mm/hr) | 50 |
| Maximum Time of Concentration (mins) | 30 |
| Foul Sewage (l/s/ha) | 0.000 |
| Volumetric Runoff Coeff. | 0.840 |
| PIMP (%) | 100 |
| Add Flow / Climate Change (%) | 0 |
| Minimum Backdrop Height (m) | 0.200 |
| Maximum Backdrop Height (m) | 1.500 |
| Min Design Depth for Optimisation (m) | 1.200 |
| Min Vel for Auto Design only (m/s) | 1.00 |
| Min Slope for Optimisation (1:X) | 500 |

Designed with Level Soffits

### Network Design Table for Southern Network

| PN | Length (m) | Fall (m) | Slope (1:X) | I.Area (ha) | T.E. (mins) | Base Flow (l/s) | k (mm) | HYD SECT | DIA (mm) | Section Type | Auto Design |
|---|---|---|---|---|---|---|---|---|---|---|---|
| S1.000 | 48.206 | 0.289 | 167.0 | 0.000 | 4.00 | 0.0 | 0.600 | o | 225 | Pipe/Conduit | |
| S1.001 | 48.206 | 0.203 | 237.5 | 0.052 | 0.00 | 0.0 | 0.600 | o | 300 | Pipe/Conduit | |
| S1.002 | 42.597 | 0.192 | 221.9 | 0.074 | 0.00 | 0.0 | 0.600 | o | 300 | Pipe/Conduit | |
| S1.003 | 10.249 | 0.570 | 18.0 | 0.000 | 0.00 | 0.0 | 0.600 | o | 300 | Pipe/Conduit | |
| S2.000 | 55.556 | 0.556 | 99.9 | 0.088 | 4.00 | 0.0 | 0.600 | o | 150 | Pipe/Conduit | |

### Network Results Table

| PN | Rain (mm/hr) | T.C. (mins) | US/IL (m) | Σ I.Area (ha) | Σ Base Flow (l/s) | Foul (l/s) | Add Flow (l/s) | Vel (m/s) | Cap (l/s) | Flow (l/s) |
|---|---|---|---|---|---|---|---|---|---|---|
| S1.000 | 50.00 | 4.80 | 26.875 | 0.000 | 0.0 | 0.0 | 0.0 | 1.01 | 40.1 | 0.0 |
| S1.001 | 50.00 | 5.59 | 26.511 | 0.052 | 0.0 | 0.0 | 0.0 | 1.02 | 71.8 | 7.9 |
| S1.002 | 46.83 | 6.26 | 26.308 | 0.126 | 0.0 | 0.0 | 0.0 | 1.05 | 74.3 | 17.9 |
| S1.003 | 46.62 | 6.31 | 26.116 | 0.126 | 0.0 | 0.0 | 0.0 | 3.73 | 263.3 | 17.9 |
| S2.000 | 50.00 | 4.92 | 26.575 | 0.088 | 0.0 | 0.0 | 0.0 | 1.01 | 17.8 | 13.3 |

©1982-2020 Innovyze

## Network Design Table for Southern Network

| PN | Length (m) | Fall (m) | Slope (1:X) | I.Area (ha) | T.E. (mins) | Base Flow (l/s) | k (mm) | HYD SECT | DIA (mm) | Section Type | Auto Design |
|---|---|---|---|---|---|---|---|---|---|---|---|
| S2.001 | 25.397 | 0.227 | 111.9 | 0.037 | 0.00 | 0.0 | 0.600 | o | 225 | Pipe/Conduit | |
| S3.000 | 44.176 | 0.442 | 99.9 | 0.054 | 4.00 | 0.0 | 0.600 | o | 150 | Pipe/Conduit | |
| S3.001 | 16.785 | 0.168 | 99.9 | 0.034 | 0.00 | 0.0 | 0.600 | o | 225 | Pipe/Conduit | |
| S3.002 | 17.177 | 0.267 | 64.3 | 0.025 | 0.00 | 0.0 | 0.600 | o | 225 | Pipe/Conduit | |
| S2.002 | 20.345 | 0.096 | 211.9 | 0.033 | 0.00 | 0.0 | 0.600 | o | 300 | Pipe/Conduit | |
| S1.004 | 12.524 | 0.496 | 25.3 | 0.051 | 0.00 | 0.0 | 0.600 | o | 300 | Pipe/Conduit | |
| S1.005 | 15.022 | 0.063 | 238.4 | 0.000 | 0.00 | 0.0 | 0.600 | o | 300 | Pipe/Conduit | |

## Network Results Table

| PN | Rain (mm/hr) | T.C. (mins) | US/IL (m) | Σ I.Area (ha) | Σ Base Flow (l/s) | Foul (l/s) | Add Flow (l/s) | Vel (m/s) | Cap (l/s) | Flow (l/s) |
|---|---|---|---|---|---|---|---|---|---|---|
| S2.001 | 50.00 | 5.26 | 25.944 | 0.125 | 0.0 | 0.0 | 0.0 | 1.24 | 49.1 | 19.0 |
| S3.000 | 50.00 | 4.73 | 26.669 | 0.054 | 0.0 | 0.0 | 0.0 | 1.01 | 17.8 | 8.2 |
| S3.001 | 50.00 | 4.95 | 26.152 | 0.088 | 0.0 | 0.0 | 0.0 | 1.31 | 52.0 | 13.3 |
| S3.002 | 50.00 | 5.12 | 25.984 | 0.113 | 0.0 | 0.0 | 0.0 | 1.63 | 64.9 | 17.1 |
| S2.002 | 50.00 | 5.58 | 25.642 | 0.271 | 0.0 | 0.0 | 0.0 | 1.08 | 76.1 | 41.1 |
| S1.004 | 46.33 | 6.37 | 25.546 | 0.448 | 0.0 | 0.0 | 0.0 | 3.14 | 222.1 | 63.0 |
| S1.005 | 45.30 | 6.62 | 25.050 | 0.448 | 0.0 | 0.0 | 0.0 | 1.01 | 71.7 | 63.0 |

©1982-2020 Innovyze

## Manhole Schedules for Southern Network

| MH Name | MH CL (m) | MH Depth (m) | MH Connection | MH Diam.,L*W (mm) | Pipe Out PN | Pipe Out Invert Level (m) | Pipe Out Diameter (mm) | Pipes In PN | Pipes In Invert Level (m) | Pipes In Diameter (mm) | Backdro (mm) |
|---|---|---|---|---|---|---|---|---|---|---|---|
| SSW01 | 28.000 | 1.125 | Open Manhole | 1200 | S1.000 | 26.875 | 225 | | | | |
| SSW02 | 28.220 | 1.709 | Open Manhole | 1200 | S1.001 | 26.511 | 300 | S1.000 | 26.586 | 225 | |
| SSW03 | 28.346 | 2.037 | Open Manhole | 1200 | S1.002 | 26.308 | 300 | S1.001 | 26.308 | 300 | |
| SSW04 | 28.235 | 2.119 | Open Manhole | 1200 | S1.003 | 26.116 | 300 | S1.002 | 26.116 | 300 | |
| SSW05 | 27.925 | 1.350 | Open Manhole | 1200 | S2.000 | 26.575 | 150 | | | | |
| SSW06 | 28.180 | 2.236 | Open Manhole | 1200 | S2.001 | 25.944 | 225 | S2.000 | 26.019 | 150 | |
| SSW07 | 28.019 | 1.350 | Open Manhole | 1200 | S3.000 | 26.669 | 150 | | | | |
| SSW08 | 28.601 | 2.449 | Open Manhole | 1200 | S3.001 | 26.152 | 225 | S3.000 | 26.227 | 150 | |
| SSW09 | 28.460 | 2.476 | Open Manhole | 1200 | S3.002 | 25.984 | 225 | S3.001 | 25.984 | 225 | |
| SSW10 | 28.202 | 2.560 | Open Manhole | 1200 | S2.002 | 25.642 | 300 | S2.001 | 25.717 | 225 | |
| | | | | | | | | S3.002 | 25.717 | 225 | |
| SSW11 | 28.075 | 2.529 | Open Manhole | 1200 | S1.004 | 25.546 | 300 | S1.003 | 25.546 | 300 | |
| | | | | | | | | S2.002 | 25.546 | 300 | |
| SEX MH25 | 28.000 | 2.950 | Open Manhole | 1200 | S1.005 | 25.050 | 300 | S1.004 | 25.050 | 300 | |
| S | 28.000 | 3.013 | Open Manhole | 0 | | OUTFALL | | S1.005 | 24.987 | 300 | |

| MH Name | Manhole Easting (m) | Manhole Northing (m) | Intersection Easting (m) | Intersection Northing (m) | Manhole Access | Layout (North) |
|---|---|---|---|---|---|---|
| SSW01 | 449129.681 | 116824.219 | 449129.681 | 116824.219 | Required |  |
| SSW02 | 449082.199 | 116832.546 | 449082.199 | 116832.546 | Required |  |
| SSW03 | 449034.718 | 116840.874 | 449034.718 | 116840.874 | Required |  |
| SSW04 | 449042.065 | 116882.832 | 449042.065 | 116882.832 | Required |  |
| SSW05 | 448968.621 | 116814.997 | 448968.621 | 116814.997 | Required |  |
| SSW06 | 448990.629 | 116866.009 | 448990.629 | 116866.009 | Required |  |
| SSW07 | 448986.064 | 116807.465 | 448986.064 | 116807.465 | Required |  |

©1982-2020 Innovyze

## Manhole Schedules for Southern Network

| MH Name | Manhole Easting (m) | Manhole Northing (m) | Intersection Easting (m) | Intersection Northing (m) | Manhole Access | Layout (North) |
|---|---|---|---|---|---|---|
| SSW08 | 449003.565 | 116848.027 | 449003.565 | 116848.027 | Required | |
| SSW09 | 449014.574 | 116860.697 | 449014.574 | 116860.697 | Required | |
| SSW10 | 449013.116 | 116877.812 | 449013.116 | 116877.812 | Required | |
| SSW11 | 449032.085 | 116885.165 | 449032.085 | 116885.165 | Required | |
| SEX MH25 | 449034.249 | 116897.501 | 449034.249 | 116897.501 | Required | |
| S | 449019.489 | 116900.294 | | | No Entry | |

©1982-2020 Innovyze

## PIPELINE SCHEDULES for Southern Network

### Upstream Manhole

| PN | Hyd Sect | Diam (mm) | MH Name | C.Level (m) | I.Level (m) | D.Depth (m) | MH Connection | MH DIAM., L*W (mm) |
|---|---|---|---|---|---|---|---|---|
| S1.000 | o | 225 | SSW01 | 28.000 | 26.875 | 0.900 | Open Manhole | 1200 |
| S1.001 | o | 300 | SSW02 | 28.220 | 26.511 | 1.409 | Open Manhole | 1200 |
| S1.002 | o | 300 | SSW03 | 28.346 | 26.308 | 1.737 | Open Manhole | 1200 |
| S1.003 | o | 300 | SSW04 | 28.235 | 26.116 | 1.819 | Open Manhole | 1200 |
| S2.000 | o | 150 | SSW05 | 27.925 | 26.575 | 1.200 | Open Manhole | 1200 |
| S2.001 | o | 225 | SSW06 | 28.180 | 25.944 | 2.011 | Open Manhole | 1200 |
| S3.000 | o | 150 | SSW07 | 28.019 | 26.669 | 1.200 | Open Manhole | 1200 |
| S3.001 | o | 225 | SSW08 | 28.601 | 26.152 | 2.224 | Open Manhole | 1200 |
| S3.002 | o | 225 | SSW09 | 28.460 | 25.984 | 2.251 | Open Manhole | 1200 |
| S2.002 | o | 300 | SSW10 | 28.202 | 25.642 | 2.260 | Open Manhole | 1200 |
| S1.004 | o | 300 | SSW11 | 28.075 | 25.546 | 2.229 | Open Manhole | 1200 |
| S1.005 | o | 300 | SEX MH25 | 28.000 | 25.050 | 2.650 | Open Manhole | 1200 |

### Downstream Manhole

| PN | Length (m) | Slope (1:X) | MH Name | C.Level (m) | I.Level (m) | D.Depth (m) | MH Connection | MH DIAM., L*W (mm) |
|---|---|---|---|---|---|---|---|---|
| S1.000 | 48.206 | 167.0 | SSW02 | 28.220 | 26.586 | 1.409 | Open Manhole | 1200 |
| S1.001 | 48.206 | 237.5 | SSW03 | 28.346 | 26.308 | 1.737 | Open Manhole | 1200 |
| S1.002 | 42.597 | 221.9 | SSW04 | 28.235 | 26.116 | 1.819 | Open Manhole | 1200 |
| S1.003 | 10.249 | 18.0 | SSW11 | 28.075 | 25.546 | 2.229 | Open Manhole | 1200 |
| S2.000 | 55.556 | 99.9 | SSW06 | 28.180 | 26.019 | 2.011 | Open Manhole | 1200 |
| S2.001 | 25.397 | 111.9 | SSW10 | 28.202 | 25.717 | 2.260 | Open Manhole | 1200 |
| S3.000 | 44.176 | 99.9 | SSW08 | 28.601 | 26.227 | 2.224 | Open Manhole | 1200 |
| S3.001 | 16.785 | 99.9 | SSW09 | 28.460 | 25.984 | 2.251 | Open Manhole | 1200 |
| S3.002 | 17.177 | 64.3 | SSW10 | 28.202 | 25.717 | 2.260 | Open Manhole | 1200 |
| S2.002 | 20.345 | 211.9 | SSW11 | 28.075 | 25.546 | 2.229 | Open Manhole | 1200 |
| S1.004 | 12.524 | 25.3 | SEX MH25 | 28.000 | 25.050 | 2.650 | Open Manhole | 1200 |
| S1.005 | 15.022 | 238.4 | S | 28.000 | 24.987 | 2.713 | Open Manhole | 0 |

©1982-2020 Innovyze

## Simulation Criteria for Southern Network

| | | | |
|---|---|---|---|
| Volumetric Runoff Coeff | 0.840 | Additional Flow - % of Total Flow | 0.000 |
| Areal Reduction Factor | 1.000 | MADD Factor * 10m³/ha Storage | 2.000 |
| Hot Start (mins) | 0 | Inlet Coeffiecient | 0.800 |
| Hot Start Level (mm) | 0 | Flow per Person per Day (l/per/day) | 0.000 |
| Manhole Headloss Coeff (Global) | 0.500 | Run Time (mins) | 60 |
| Foul Sewage per hectare (l/s) | 0.000 | Output Interval (mins) | 1 |

| | | | |
|---|---|---|---|
| Number of Input Hydrographs | 0 | Number of Storage Structures | 7 |
| Number of Online Controls | 2 | Number of Time/Area Diagrams | 3 |
| Number of Offline Controls | 0 | Number of Real Time Controls | 0 |

## Synthetic Rainfall Details

| | |
|---|---|
| Rainfall Model | FEH |
| Return Period (years) | 2 |
| FEH Rainfall Version | 1999 |
| Site Location | GB 447800 117600 SU 47800 17600 |
| C (1km) | -0.028 |
| D1 (1km) | 0.423 |
| D2 (1km) | 0.310 |
| D3 (1km) | 0.398 |
| E (1km) | 0.304 |
| F (1km) | 2.288 |
| Summer Storms | Yes |
| Winter Storms | No |
| Cv (Summer) | 0.840 |
| Cv (Winter) | 0.840 |
| Storm Duration (mins) | 30 |

©1982-2020 Innovyze

## Online Controls for Southern Network

### Orifice Manhole: SSW10, DS/PN: S2.002, Volume (m³): 4.5

Diameter (m) 0.100 Discharge Coefficient 0.600 Invert Level (m) 25.717

### Hydro-Brake® Optimum Manhole: SEX MH25, DS/PN: S1.005, Volume (m³): 4.1

| | |
|---|---|
| Unit Reference | MD-SHE-0148-1500-2800-1500 |
| Design Head (m) | 2.800 |
| Design Flow (l/s) | 15.0 |
| Flush-Flo™ | Calculated |
| Objective | Minimise upstream storage |
| Application | Surface |
| Sump Available | Yes |
| Diameter (mm) | 148 |
| Invert Level (m) | 25.050 |
| Minimum Outlet Pipe Diameter (mm) | 225 |
| Suggested Manhole Diameter (mm) | 1500 |

| Control Points | Head (m) | Flow (l/s) |
|---|---|---|
| Design Point (Calculated) | 2.800 | 15.0 |
| Flush-Flo™ | 0.646 | 13.4 |
| Kick-Flo® | 1.328 | 10.5 |
| Mean Flow over Head Range | - | 12.3 |

The hydrological calculations have been based on the Head/Discharge relationship for the Hydro-Brake® Optimum as specified. Should another type of control device other than a Hydro-Brake Optimum® be utilised then these storage routing calculations will be invalidated

| Depth (m) | Flow (l/s) | Depth (m) | Flow (l/s) | Depth (m) | Flow (l/s) | Depth (m) | Flow (l/s) |
|---|---|---|---|---|---|---|---|
| 0.100 | 5.3 | 1.200 | 11.8 | 3.000 | 15.5 | 7.000 | 23.2 |
| 0.200 | 10.8 | 1.400 | 10.8 | 3.500 | 16.7 | 7.500 | 24.0 |
| 0.300 | 12.1 | 1.600 | 11.5 | 4.000 | 17.8 | 8.000 | 24.8 |
| 0.400 | 12.9 | 1.800 | 12.2 | 4.500 | 18.8 | 8.500 | 25.5 |
| 0.500 | 13.2 | 2.000 | 12.8 | 5.000 | 19.8 | 9.000 | 26.2 |
| 0.600 | 13.4 | 2.200 | 13.4 | 5.500 | 20.7 | 9.500 | 26.9 |
| 0.800 | 13.3 | 2.400 | 13.9 | 6.000 | 21.6 | | |
| 1.000 | 12.8 | 2.600 | 14.5 | 6.500 | 22.4 | | |

©1982-2020 Innovyze

## Storage Structures for Southern Network

### Porous Car Park Manhole: SSW05, DS/PN: S2.000

| | | | |
|---|---|---|---|
| Infiltration Coefficient Base (m/hr) | 0.00000 | Width (m) | 10.0 |
| Membrane Percolation (mm/hr) | 1000 | Length (m) | 46.0 |
| Max Percolation (l/s) | 127.8 | Slope (1:X) | 0.0 |
| Safety Factor | 2.0 | Depression Storage (mm) | 5 |
| Porosity | 0.30 | Evaporation (mm/day) | 3 |
| Invert Level (m) | 27.325 | Membrane Depth (mm) | 0 |

### Porous Car Park Manhole: SSW06, DS/PN: S2.001

| | | | |
|---|---|---|---|
| Infiltration Coefficient Base (m/hr) | 0.00000 | Width (m) | 10.0 |
| Membrane Percolation (mm/hr) | 1000 | Length (m) | 17.6 |
| Max Percolation (l/s) | 48.9 | Slope (1:X) | 0.0 |
| Safety Factor | 2.0 | Depression Storage (mm) | 5 |
| Porosity | 0.30 | Evaporation (mm/day) | 3 |
| Invert Level (m) | 27.580 | Membrane Depth (mm) | 0 |

### Porous Car Park Manhole: SSW07, DS/PN: S3.000

| | | | |
|---|---|---|---|
| Infiltration Coefficient Base (m/hr) | 0.00000 | Width (m) | 10.0 |
| Membrane Percolation (mm/hr) | 1000 | Length (m) | 13.2 |
| Max Percolation (l/s) | 36.7 | Slope (1:X) | 0.0 |
| Safety Factor | 2.0 | Depression Storage (mm) | 5 |
| Porosity | 0.30 | Evaporation (mm/day) | 3 |
| Invert Level (m) | 27.419 | Membrane Depth (mm) | 0 |

### Porous Car Park Manhole: SSW08, DS/PN: S3.001

| | | | |
|---|---|---|---|
| Infiltration Coefficient Base (m/hr) | 0.00000 | Width (m) | 10.0 |
| Membrane Percolation (mm/hr) | 1000 | Length (m) | 13.6 |
| Max Percolation (l/s) | 37.8 | Slope (1:X) | 0.0 |
| Safety Factor | 2.0 | Depression Storage (mm) | 5 |
| Porosity | 0.30 | Evaporation (mm/day) | 3 |
| Invert Level (m) | 28.000 | Membrane Depth (mm) | 0 |

### Porous Car Park Manhole: SSW09, DS/PN: S3.002

| | | | |
|---|---|---|---|
| Infiltration Coefficient Base (m/hr) | 0.00000 | Width (m) | 10.0 |
| Membrane Percolation (mm/hr) | 1000 | Length (m) | 11.0 |
| Max Percolation (l/s) | 30.6 | Slope (1:X) | 0.0 |
| Safety Factor | 2.0 | Depression Storage (mm) | 5 |
| Porosity | 0.30 | Evaporation (mm/day) | 3 |
| Invert Level (m) | 27.860 | Membrane Depth (mm) | 0 |

### Porous Car Park Manhole: SSW10, DS/PN: S2.002

| | | | |
|---|---|---|---|
| Infiltration Coefficient Base (m/hr) | 0.00000 | Max Percolation (l/s) | 32.8 |
| Membrane Percolation (mm/hr) | 1000 | Safety Factor | 2.0 |

©1982-2020 Innovyze

## Porous Car Park Manhole: SSW10, DS/PN: S2.002

| | | | |
|---|---|---|---|
| Porosity | 0.30 | Slope (1:X) | 0.0 |
| Invert Level (m) | 27.602 | Depression Storage (mm) | 5 |
| Width (m) | 10.0 | Evaporation (mm/day) | 3 |
| Length (m) | 11.8 | Membrane Depth (mm) | 0 |

## Cellular Storage Manhole: SSW11, DS/PN: S1.004

| | | | |
|---|---|---|---|
| Invert Level (m) | 25.546 | Safety Factor | 2.0 |
| Infiltration Coefficient Base (m/hr) | 0.00000 | Porosity | 0.95 |
| Infiltration Coefficient Side (m/hr) | 0.00000 | | |

| Depth (m) | Area (m²) | Inf. Area (m²) | Depth (m) | Area (m²) | Inf. Area (m²) |
|---|---|---|---|---|---|
| 0.000 | 180.0 | 0.0 | 1.000 | 180.0 | 0.0 |
| 0.500 | 180.0 | 0.0 | 1.001 | 0.0 | 0.0 |

## Time Area Diagram at Pipe Number S1.000 for Southern Network

Total Area (ha) 0.095

| Time (mins) From: | To: | Area (ha) | Time (mins) From: | To: | Area (ha) | Time (mins) From: | To: | Area (ha) | Time (mins) From: | To: | Area (ha) |
|---|---|---|---|---|---|---|---|---|---|---|---|
| 0 | 2 | 0.000 | 6 | 8 | 0.000 | 12 | 14 | 0.019 | 18 | 20 | 0.019 |
| 2 | 4 | 0.000 | 8 | 10 | 0.000 | 14 | 16 | 0.019 | | | |
| 4 | 6 | 0.000 | 10 | 12 | 0.019 | 16 | 18 | 0.019 | | | |

## Time Area Diagram at Pipe Number S1.001 for Southern Network

Total Area (ha) 0.100

| Time (mins) From: | To: | Area (ha) | Time (mins) From: | To: | Area (ha) | Time (mins) From: | To: | Area (ha) | Time (mins) From: | To: | Area (ha) |
|---|---|---|---|---|---|---|---|---|---|---|---|
| 0 | 2 | 0.000 | 6 | 8 | 0.000 | 12 | 14 | 0.020 | 18 | 20 | 0.020 |
| 2 | 4 | 0.000 | 8 | 10 | 0.000 | 14 | 16 | 0.020 | | | |
| 4 | 6 | 0.000 | 10 | 12 | 0.020 | 16 | 18 | 0.020 | | | |

## Time Area Diagram at Pipe Number S1.002 for Southern Network

Total Area (ha) 0.110

| Time (mins) From: | To: | Area (ha) | Time (mins) From: | To: | Area (ha) | Time (mins) From: | To: | Area (ha) | Time (mins) From: | To: | Area (ha) |
|---|---|---|---|---|---|---|---|---|---|---|---|
| 0 | 2 | 0.000 | 6 | 8 | 0.000 | 12 | 14 | 0.022 | 18 | 20 | 0.022 |
| 2 | 4 | 0.000 | 8 | 10 | 0.000 | 14 | 16 | 0.022 | | | |
| 4 | 6 | 0.000 | 10 | 12 | 0.022 | 16 | 18 | 0.022 | | | |

©1982-2020 Innovyze

## 2 year Return Period Summary of Critical Results by Maximum Level (Rank 1) for Southern Network

### Simulation Criteria

| | | | |
|---|---|---|---|
| Areal Reduction Factor | 1.000 | Additional Flow - % of Total Flow | 0.000 |
| Hot Start (mins) | 0 | MADD Factor * 10m³/ha Storage | 2.000 |
| Hot Start Level (mm) | 0 | Inlet Coeffiecient | 0.800 |
| Manhole Headloss Coeff (Global) | 0.500 | Flow per Person per Day (l/per/day) | 0.000 |
| Foul Sewage per hectare (l/s) | 0.000 | | |

| | | | |
|---|---|---|---|
| Number of Input Hydrographs | 0 | Number of Storage Structures | 7 |
| Number of Online Controls | 2 | Number of Time/Area Diagrams | 3 |
| Number of Offline Controls | 0 | Number of Real Time Controls | 0 |

### Synthetic Rainfall Details

| | |
|---|---|
| Rainfall Model | FEH |
| FEH Rainfall Version | 2013 |
| Site Location | GB 447800 117600 SU 47800 17600 |
| Data Type | Catchment |
| Cv (Summer) | 0.840 |
| Cv (Winter) | 0.840 |

| | |
|---|---|
| Margin for Flood Risk Warning (mm) | 300.0 |
| Analysis Timestep | 2.5 Second Increment (Extended) |
| DTS Status | OFF |
| DVD Status | ON |
| Inertia Status | ON |

| | |
|---|---|
| Profile(s) | Summer and Winter |
| Duration(s) (mins) | 15, 30, 60, 120, 240, 360, 480, 960, 1440 |
| Return Period(s) (years) | 2, 30, 100 |
| Climate Change (%) | 0, 0, 40 |

| PN | US/MH Name | Storm | Return Period | Climate Change | First (X) Surcharge | First (Y) Flood | First (Z) Overflow | Overflow Act. |
|---|---|---|---|---|---|---|---|---|
| S1.000 | SSW01 | 30 Summer | 2 | +0% | 100/15 Summer | | | |
| S1.001 | SSW02 | 30 Summer | 2 | +0% | 100/15 Summer | | | |
| S1.002 | SSW03 | 30 Summer | 2 | +0% | 100/15 Summer | | | |
| S1.003 | SSW04 | 30 Summer | 2 | +0% | 100/30 Summer | | | |
| S2.000 | SSW05 | 30 Summer | 2 | +0% | 2/30 Summer | | | |
| S2.001 | SSW06 | 30 Summer | 2 | +0% | 2/15 Summer | | | |
| S3.000 | SSW07 | 15 Summer | 2 | +0% | 30/15 Summer | | | |
| S3.001 | SSW08 | 30 Summer | 2 | +0% | 2/15 Summer | | | |
| S3.002 | SSW09 | 30 Summer | 2 | +0% | 2/15 Summer | | | |
| S2.002 | SSW10 | 30 Summer | 2 | +0% | 2/15 Summer | | | |
| S1.004 | SSW11 | 120 Summer | 2 | +0% | 30/15 Summer | | | |
| S1.005 | SEX MH25 | 120 Summer | 2 | +0% | 2/15 Summer | | | |

©1982-2020 Innovyze

## 2 year Return Period Summary of Critical Results by Maximum Level (Rank 1) for Southern Network

| PN | US/MH Name | Water Level (m) | Surcharged Depth (m) | Flooded Volume (m³) | Flow / Cap. | Overflow (l/s) | Half Drain Time (mins) | Pipe Flow (l/s) | Status |
|---|---|---|---|---|---|---|---|---|---|
| S1.000 | SSW01 | 26.957 | -0.143 | 0.000 | 0.28 | | | 10.9 | OK |
| S1.001 | SSW02 | 26.630 | -0.181 | 0.000 | 0.33 | | | 22.2 | OK |
| S1.002 | SSW03 | 26.459 | -0.150 | 0.000 | 0.50 | | | 34.4 | OK |
| S1.003 | SSW04 | 26.202 | -0.214 | 0.000 | 0.18 | | | 34.4 | OK |
| S2.000 | SSW05 | 26.738 | 0.013 | 0.000 | 0.82 | | 4 | 14.3 | SURCHARGED |
| S2.001 | SSW06 | 26.696 | 0.527 | 0.000 | 0.25 | | 9 | 11.1 | SURCHARGED |
| S3.000 | SSW07 | 26.754 | -0.065 | 0.000 | 0.61 | | 4 | 10.6 | OK |
| S3.001 | SSW08 | 26.705 | 0.328 | 0.000 | 0.28 | | 7 | 12.9 | SURCHARGED |
| S3.002 | SSW09 | 26.693 | 0.484 | 0.000 | 0.23 | | 11 | 13.1 | SURCHARGED |
| S2.002 | SSW10 | 26.677 | 0.735 | 0.000 | 0.30 | | 16 | 19.8 | SURCHARGED |
| S1.004 | SSW11 | 25.788 | -0.058 | 0.000 | 0.10 | | 49 | 17.5 | OK |
| S1.005 | SEX MH25 | 25.778 | 0.428 | 0.000 | 0.22 | | | 13.3 | SURCHARGED |

| PN | US/MH Name | Level Exceeded |
|---|---|---|
| S1.000 | SSW01 | |
| S1.001 | SSW02 | |
| S1.002 | SSW03 | |
| S1.003 | SSW04 | |
| S2.000 | SSW05 | |
| S2.001 | SSW06 | |
| S3.000 | SSW07 | |
| S3.001 | SSW08 | |
| S3.002 | SSW09 | |
| S2.002 | SSW10 | |
| S1.004 | SSW11 | |
| S1.005 | SEX MH25 | |

©1982-2020 Innovyze

## 30 year Return Period Summary of Critical Results by Maximum Level (Rank 1) for Southern Network

### Simulation Criteria

Areal Reduction Factor 1.000 Additional Flow - % of Total Flow 0.000
Hot Start (mins) 0 MADD Factor * 10m³/ha Storage 2.000
Hot Start Level (mm) 0 Inlet Coeffiecient 0.800
Manhole Headloss Coeff (Global) 0.500 Flow per Person per Day (l/per/day) 0.000
Foul Sewage per hectare (l/s) 0.000

Number of Input Hydrographs 0 Number of Storage Structures 7
Number of Online Controls 2 Number of Time/Area Diagrams 3
Number of Offline Controls 0 Number of Real Time Controls 0

### Synthetic Rainfall Details

Rainfall Model FEH
FEH Rainfall Version 2013
Site Location GB 447800 117600 SU 47800 17600
Data Type Catchment
Cv (Summer) 0.840
Cv (Winter) 0.840

Margin for Flood Risk Warning (mm) 300.0
Analysis Timestep 2.5 Second Increment (Extended)
DTS Status OFF
DVD Status ON
Inertia Status ON

Profile(s) Summer and Winter
Duration(s) (mins) 15, 30, 60, 120, 240, 360, 480, 960, 1440
Return Period(s) (years) 2, 30, 100
Climate Change (%) 0, 0, 40

WARNING: Half Drain Time has not been calculated as the structure is too full.

| PN | US/MH Name | Storm | Return Period | Climate Change | First (X) Surcharge | First (Y) Flood | First (Z) Overflow | Overflow Act. |
|---|---|---|---|---|---|---|---|---|
| S1.000 | SSW01 | 30 Summer | 30 | +0% | 100/15 Summer | | | |
| S1.001 | SSW02 | 30 Summer | 30 | +0% | 100/15 Summer | | | |
| S1.002 | SSW03 | 30 Summer | 30 | +0% | 100/15 Summer | | | |
| S1.003 | SSW04 | 30 Summer | 30 | +0% | 100/30 Summer | | | |
| S2.000 | SSW05 | 60 Summer | 30 | +0% | 2/30 Summer | | | |
| S2.001 | SSW06 | 30 Summer | 30 | +0% | 2/15 Summer | | | |
| S3.000 | SSW07 | 30 Summer | 30 | +0% | 30/15 Summer | | | |
| S3.001 | SSW08 | 15 Summer | 30 | +0% | 2/15 Summer | | | |
| S3.002 | SSW09 | 15 Summer | 30 | +0% | 2/15 Summer | | | |
| S2.002 | SSW10 | 15 Summer | 30 | +0% | 2/15 Summer | | | |
| S1.004 | SSW11 | 60 Winter | 30 | +0% | 30/15 Summer | | | |
| S1.005 | SEX MH25 | 60 Winter | 30 | +0% | 2/15 Summer | | | |

©1982-2020 Innovyze

## 30 year Return Period Summary of Critical Results by Maximum Level (Rank 1) for Southern Network

| PN | US/MH Name | Water Level (m) | Surcharged Depth (m) | Flooded Volume (m³) | Flow / Cap. | Overflow (l/s) | Half Drain Time (mins) | Pipe Flow (l/s) | Status |
|---|---|---|---|---|---|---|---|---|---|
| S1.000 | SSW01 | 27.002 | -0.098 | 0.000 | 0.61 | | | 23.3 | OK |
| S1.001 | SSW02 | 26.699 | -0.113 | 0.000 | 0.70 | | | 47.4 | OK |
| S1.002 | SSW03 | 26.604 | -0.004 | 0.000 | 1.00 | | | 69.3 | OK |
| S1.003 | SSW04 | 26.242 | -0.175 | 0.000 | 0.37 | | | 69.3 | OK |
| S2.000 | SSW05 | 27.391 | 0.666 | 0.000 | 0.77 | | 15 | 13.3 | SURCHARGED |
| S2.001 | SSW06 | 27.587 | 1.418 | 0.000 | 0.36 | | 28 | 16.3 | SURCHARGED |
| S3.000 | SSW07 | 27.518 | 0.699 | 0.000 | 0.66 | | 9 | 11.4 | SURCHARGED |
| S3.001 | SSW08 | 27.658 | 1.281 | 0.000 | 0.45 | | 18 | 20.9 | SURCHARGED |
| S3.002 | SSW09 | 27.642 | 1.433 | 0.000 | 0.26 | | 20 | 15.1 | SURCHARGED |
| S2.002 | SSW10 | 27.602 | 1.660 | 0.000 | 0.42 | | 27 | 28.0 | SURCHARGED |
| S1.004 | SSW11 | 26.212 | 0.366 | 0.000 | 0.11 | | | 19.2 | SURCHARGED |
| S1.005 | SEX MH25 | 26.224 | 0.874 | 0.000 | 0.22 | | | 13.3 | SURCHARGED |

| PN | US/MH Name | Level Exceeded |
|---|---|---|
| S1.000 | SSW01 | |
| S1.001 | SSW02 | |
| S1.002 | SSW03 | |
| S1.003 | SSW04 | |
| S2.000 | SSW05 | |
| S2.001 | SSW06 | |
| S3.000 | SSW07 | |
| S3.001 | SSW08 | |
| S3.002 | SSW09 | |
| S2.002 | SSW10 | |
| S1.004 | SSW11 | |
| S1.005 | SEX MH25 | |

©1982-2020 Innovyze

## 100 year Return Period Summary of Critical Results by Maximum Level (Rank 1) for Southern Network

### Simulation Criteria

Areal Reduction Factor 1.000 Additional Flow - % of Total Flow 0.000
Hot Start (mins) 0 MADD Factor * 10m³/ha Storage 2.000
Hot Start Level (mm) 0 Inlet Coeffiecient 0.800
Manhole Headloss Coeff (Global) 0.500 Flow per Person per Day (l/per/day) 0.000
Foul Sewage per hectare (l/s) 0.000

Number of Input Hydrographs 0 Number of Storage Structures 7
Number of Online Controls 2 Number of Time/Area Diagrams 3
Number of Offline Controls 0 Number of Real Time Controls 0

### Synthetic Rainfall Details

Rainfall Model FEH
FEH Rainfall Version 2013
Site Location GB 447800 117600 SU 47800 17600
Data Type Catchment
Cv (Summer) 0.840
Cv (Winter) 0.840

Margin for Flood Risk Warning (mm) 300.0
Analysis Timestep 2.5 Second Increment (Extended)
DTS Status OFF
DVD Status ON
Inertia Status ON

Profile(s) Summer and Winter
Duration(s) (mins) 15, 30, 60, 120, 240, 360, 480, 960, 1440
Return Period(s) (years) 2, 30, 100
Climate Change (%) 0, 0, 40

WARNING: Half Drain Time has not been calculated as the structure is too full.

| PN | US/MH Name | Storm | Return Period | Climate Change | First (X) Surcharge | First (Y) Flood | First (Z) Overflow | Overflow Act. |
|---|---|---|---|---|---|---|---|---|
| S1.000 | SSW01 | 120 Winter | 100 | +40% | 100/15 Summer | | | |
| S1.001 | SSW02 | 120 Winter | 100 | +40% | 100/15 Summer | | | |
| S1.002 | SSW03 | 120 Winter | 100 | +40% | 100/15 Summer | | | |
| S1.003 | SSW04 | 120 Winter | 100 | +40% | 100/30 Summer | | | |
| S2.000 | SSW05 | 60 Summer | 100 | +40% | 2/30 Summer | | | |
| S2.001 | SSW06 | 30 Summer | 100 | +40% | 2/15 Summer | | | |
| S3.000 | SSW07 | 60 Summer | 100 | +40% | 30/15 Summer | | | |
| S3.001 | SSW08 | 15 Summer | 100 | +40% | 2/15 Summer | | | |
| S3.002 | SSW09 | 15 Summer | 100 | +40% | 2/15 Summer | | | |
| S2.002 | SSW10 | 15 Summer | 100 | +40% | 2/15 Summer | | | |
| S1.004 | SSW11 | 120 Winter | 100 | +40% | 30/15 Summer | | | |
| S1.005 | SEX MH25 | 120 Winter | 100 | +40% | 2/15 Summer | | | |

©1982-2020 Innovyze

## 100 year Return Period Summary of Critical Results by Maximum Level (Rank 1) for Southern Network

| PN | US/MH Name | Water Level (m) | Surcharged Depth (m) | Flooded Volume (m³) | Flow / Cap. | Overflow (l/s) | Half Drain Time (mins) | Pipe Flow (l/s) | Status |
|---|---|---|---|---|---|---|---|---|---|
| S1.000 | SSW01 | 27.721 | 0.621 | 0.000 | 0.47 | | | 17.9 | FLOOD RISK |
| S1.001 | SSW02 | 27.705 | 0.894 | 0.000 | 0.54 | | | 36.7 | SURCHARGED |
| S1.002 | SSW03 | 27.690 | 1.082 | 0.000 | 0.83 | | | 57.2 | SURCHARGED |
| S1.003 | SSW04 | 27.668 | 1.251 | 0.000 | 0.29 | | | 55.6 | SURCHARGED |
| S2.000 | SSW05 | 27.578 | 0.853 | 0.000 | 0.58 | | 66 | 10.0 | SURCHARGED |
| S2.001 | SSW06 | 27.673 | 1.504 | 0.000 | 0.31 | | 9 | 14.2 | SURCHARGED |
| S3.000 | SSW07 | 27.764 | 0.945 | 0.000 | 0.60 | | 26 | 10.4 | FLOOD RISK |
| S3.001 | SSW08 | 27.869 | 1.492 | 0.000 | 0.40 | | 46 | 18.3 | SURCHARGED |
| S3.002 | SSW09 | 27.797 | 1.588 | 0.000 | 0.64 | | 47 | 36.8 | SURCHARGED |
| S2.002 | SSW10 | 27.686 | 1.744 | 0.000 | 0.44 | | 10 | 28.9 | SURCHARGED |
| S1.004 | SSW11 | 27.657 | 1.811 | 0.000 | 0.11 | | | 19.9 | SURCHARGED |
| S1.005 | SEX MH25 | 27.645 | 2.295 | 0.000 | 0.24 | | | 14.5 | SURCHARGED |

| PN | US/MH Name | Level Exceeded |
|---|---|---|
| S1.000 | SSW01 | |
| S1.001 | SSW02 | |
| S1.002 | SSW03 | |
| S1.003 | SSW04 | |
| S2.000 | SSW05 | |
| S2.001 | SSW06 | |
| S3.000 | SSW07 | |
| S3.001 | SSW08 | |
| S3.002 | SSW09 | |
| S2.002 | SSW10 | |
| S1.004 | SSW11 | |
| S1.005 | SEX MH25 | |

©1982-2020 Innovyze

## 100 year Return Period Summary of Critical Results by Maximum Level (Rank 1) for Southern Network

### Simulation Criteria

| | | | |
|---|---|---|---|
| Areal Reduction Factor | 1.000 | Additional Flow - % of Total Flow | 0.000 |
| Hot Start (mins) | 0 | MADD Factor * 10m³/ha Storage | 2.000 |
| Hot Start Level (mm) | 0 | Inlet Coeffiecient | 0.800 |
| Manhole Headloss Coeff (Global) | 0.500 | Flow per Person per Day (l/per/day) | 0.000 |
| Foul Sewage per hectare (l/s) | 0.000 | | |

| | | | |
|---|---|---|---|
| Number of Input Hydrographs | 0 | Number of Storage Structures | 7 |
| Number of Online Controls | 2 | Number of Time/Area Diagrams | 3 |
| Number of Offline Controls | 0 | Number of Real Time Controls | 0 |

### Synthetic Rainfall Details

| | |
|---|---|
| Rainfall Model | FEH |
| FEH Rainfall Version | 2013 |
| Site Location | GB 447800 117600 SU 47800 17600 |
| Data Type | Catchment |
| Cv (Summer) | 0.840 |
| Cv (Winter) | 0.840 |

| | |
|---|---|
| Margin for Flood Risk Warning (mm) | 300.0 |
| Analysis Timestep | 2.5 Second Increment (Extended) |
| DTS Status | OFF |
| DVD Status | ON |
| Inertia Status | ON |

| | |
|---|---|
| Profile(s) | Summer and Winter |
| Duration(s) (mins) | 15, 30, 60, 120, 240, 360, 480, 960, 1440 |
| Return Period(s) (years) | 100 |
| Climate Change (%) | 45 |

WARNING: Half Drain Time has not been calculated as the structure is too full.

| PN | US/MH Name | Storm | Return Period | Climate Change | First (X) Surcharge | First (Y) Flood | First (Z) Overflow | Overflow Act. |
|---|---|---|---|---|---|---|---|---|
| S1.000 | SSW01 | 120 Winter | 100 | +45% | 100/15 Summer | | | |
| S1.001 | SSW02 | 120 Winter | 100 | +45% | 100/15 Summer | | | |
| S1.002 | SSW03 | 120 Winter | 100 | +45% | 100/15 Summer | | | |
| S1.003 | SSW04 | 120 Winter | 100 | +45% | 100/30 Summer | | | |
| S2.000 | SSW05 | 120 Winter | 100 | +45% | 100/15 Summer | | | |
| S2.001 | SSW06 | 30 Summer | 100 | +45% | 100/15 Summer | | | |
| S3.000 | SSW07 | 60 Summer | 100 | +45% | 100/15 Summer | | | |
| S3.001 | SSW08 | 15 Summer | 100 | +45% | 100/15 Summer | | | |
| S3.002 | SSW09 | 15 Summer | 100 | +45% | 100/15 Summer | | | |
| S2.002 | SSW10 | 30 Summer | 100 | +45% | 100/15 Summer | | | |
| S1.004 | SSW11 | 120 Winter | 100 | +45% | 100/15 Summer | | | |
| S1.005 | SEX MH25 | 120 Winter | 100 | +45% | 100/15 Summer | | | |

©1982-2020 Innovyze

## 100 year Return Period Summary of Critical Results by Maximum Level (Rank 1) for Southern Network

| PN | US/MH Name | Water Level (m) | Surcharged Depth (m) | Flooded Volume (m³) | Flow / Cap. | Overflow (l/s) | Half Drain Time (mins) | Pipe Flow (l/s) | Status |
|---|---|---|---|---|---|---|---|---|---|
| S1.000 | SSW01 | 27.825 | 0.725 | 0.000 | 0.48 | | | 18.5 | FLOOD RISK |
| S1.001 | SSW02 | 27.806 | 0.995 | 0.000 | 0.56 | | | 38.0 | SURCHARGED |
| S1.002 | SSW03 | 27.787 | 1.179 | 0.000 | 0.85 | | | 59.3 | SURCHARGED |
| S1.003 | SSW04 | 27.759 | 1.343 | 0.000 | 0.30 | | | 56.5 | SURCHARGED |
| S2.000 | SSW05 | 27.606 | 0.881 | 0.000 | 0.60 | | 51 | 10.3 | SURCHARGED |
| S2.001 | SSW06 | 27.683 | 1.514 | 0.000 | 0.30 | | 11 | 13.7 | SURCHARGED |
| S3.000 | SSW07 | 27.782 | 0.963 | 0.000 | 0.56 | | 43 | 9.7 | FLOOD RISK |
| S3.001 | SSW08 | 27.885 | 1.508 | 0.000 | 0.40 | | 48 | 18.7 | SURCHARGED |
| S3.002 | SSW09 | 27.813 | 1.604 | 0.000 | 0.66 | | 50 | 38.4 | SURCHARGED |
| S2.002 | SSW10 | 27.695 | 1.753 | 0.000 | 0.43 | | 16 | 28.5 | SURCHARGED |
| S1.004 | SSW11 | 27.746 | 1.900 | 0.000 | 0.11 | | | 19.9 | SURCHARGED |
| S1.005 | SEX MH25 | 27.734 | 2.384 | 0.000 | 0.24 | | | 14.7 | FLOOD RISK |

| PN | US/MH Name | Level Exceeded |
|---|---|---|
| S1.000 | SSW01 | |
| S1.001 | SSW02 | |
| S1.002 | SSW03 | |
| S1.003 | SSW04 | |
| S2.000 | SSW05 | |
| S2.001 | SSW06 | |
| S3.000 | SSW07 | |
| S3.001 | SSW08 | |
| S3.002 | SSW09 | |
| S2.002 | SSW10 | |
| S1.004 | SSW11 | |
| S1.005 | SEX MH25 | |

©1982-2020 Innovyze