Air Conditioning | Product Information

MITSUBISHI ELECTRIC

PUZ-ZM200/250YKA R32

High Capacity Outdoor Units

Power Inverter Heat Pump (Three Phase)

Mr.SLIM™

Our high capacity Power Inverter outdoor units provide excellent system flexibility by connecting to 2, 3 or 4 Mr Slim indoor units.

Power Inverter technology allows high seasonal efficiency performance as well as extra-long pipe runs. These units provide efficient cooling or heating to large open areas such as retail units, gyms and halls.

R32 POWER INVERTER

Key Features & Benefits:

- Connectable to up to 4 cassette, wall mount, ducted or ceiling suspended units
- Exceptional application coverage with up to 100m pipe runs
- Maximum design flexibility due to 30m height difference between outdoor unit & indoor units
- Utilises lower GWP R32 refrigerant

Air Conditioning | Product Information

PUZ-ZM200/250YKA R32

High Capacity Outdoor Units
Power Inverter Heat Pump (Three Phase)

R32

POWER INVERTER

PUZ-ZM200/250YKA OUTDOOR UNITS		PUZ-ZM200YKA	PUZ-ZM250YKA
Capacity (kW)	Heating (nominal)	22.4	27.0
	Cooling (nominal)	19.0	22.0
SCOP (nsh) / SEER (nsc) (BS EN14825)*1		4.50 (177.1%) / 7.49 (296.4%)	4.47 (175.7%) / 7.43 (294.3%)
SOUND PRESSURE LEVEL (dBA)	Heating/Cooling	62 / 59	62 / 59
WEIGHT (kg)		137	138
DIMENSIONS (mm)	Width x Depth x Height	1050 x 330+40 x 1338	1050 x 330+40 x 1338
PIPE SIZE mm (in)	Gas	28.58 (1 1/8")	28.58 (1 1/8")
	Liquid	9.52 (3/8")	12.7 (1/2")
ELECTRICAL SUPPLY		380-415v, 50Hz	380-415v, 50Hz
PHASE		Three	Three
SYSTEM POWER INPUT (kW)	Heating/Cooling (nominal)	5.63 / 4.95	7.81 / 6.86
	Heating/Cooling (UK)	5.07 / 4.11	7.03 / 5.69
STARTING CURRENT (A)		5	5
SYSTEM RUNNING CURRENT (A)	Heating/Cooling [MAX]	9.57 / 8.58 [22.5]	13.3 / 11.6 [22.5]
FUSE RATING (BS88) - HRC (A)		25	25
MAINS CABLE No. CORES		5	5
MAX PIPE LENGTH (m)		100	100
MAX HEIGHT DIFFERENCE (m)		30	30
CHARGE REFRIGERANT (kg) / CO_2 EQUIVALENT (t)	R32 (GWP 675) - 30m	6.3 / 4.25	6.8 / 4.59
MAX ADDITIONAL REFRIGERANT (kg) / CO_2 EQUIVALENT (t)	R32 (GWP 675)	2.9 / 1.96	2.4 / 1.62

*1 PUZ-ZM200YKA connected to 2 x PLA-ZM100EA, PUZ-ZM250YKA connected to 2 x PLA-ZM125EA

PUZ-ZM200/250YKA DIMENSIONS

UPPER VIEW

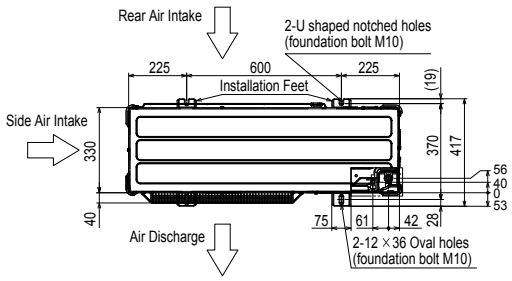

Model	① Refrigerant GAS pipe connection	② Refrigerant LIQUID pipe connection
PUZ-ZM200YKA	ø19.05 (3/4F)	ø9.52 (3/8F)
PUZ-ZM250YKA	ø19.05 (3/4F)	ø12.7 (1/2F)
PUHZ-ZRP200YKA.UK	ø19.05 (3/4F)	ø9.52 (3/8F)
PUHZ-ZRP250YKA.UK	ø19.05 (3/4F)	ø12.7 (1/2F)

※1···Indication of Terminal connection location.
※2···Refrigerant GAS pipe connection (BRAZING) O.Dø25.4.
※3···Indication of STOP VALVE connection location.

FRONT VIEW

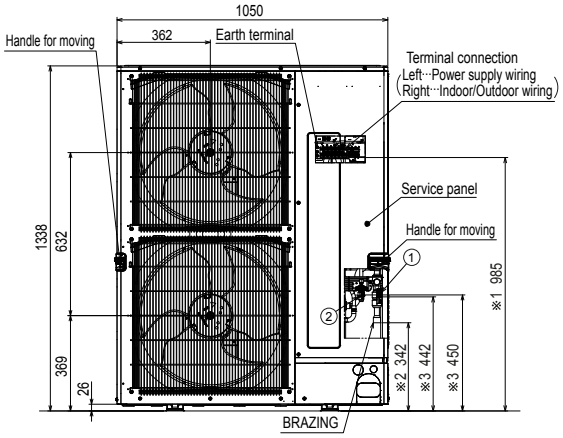

SIDE VIEW

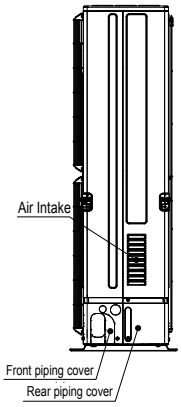

MITSUBISHI ELECTRIC
Changes for the Better

Telephone: **01707 282880**
email: **air.conditioning@meuk.mee.com**
les.mitsubishielectric.co.uk

@meuk_les @green_gateway | Mitsubishi Electric Living Environmental Systems UK | Mitsubishi Electric Cooling and Heating UK | mitsubishielectricuk_les | Mitsubishi Electric Living Environmental Systems UK | BLOG thehub.mitsubishielectric.co.uk

UNITED KINGDOM Mitsubishi Electric Europe Living Environment Systems Division, Travellers Lane, Hatfield, Hertfordshire, AL10 8XB, England. Telephone: 01707 282880 Fax: 01707 278881
IRELAND Mitsubishi Electric Europe, Westgate Business Park, Ballymount, Dublin 24, Ireland. Telephone: (01) 419 8800 Fax: (01) 419 8890 International code: (003531)

Country of origin: United Kingdom - Japan - Thailand - Malaysia. ©Mitsubishi Electric Europe 2020. Mitsubishi and Mitsubishi Electric are trademarks of Mitsubishi Electric Europe B.V. The company reserves the right to make any variation in technical specification to the equipment described, or to withdraw or replace products without prior notification or public announcement. Mitsubishi Electric is constantly developing and improving its products. All descriptions, illustrations, drawings and specifications in this publication present only general particulars and shall not form part of any contract. All goods are supplied subject to the Company's General Conditions of Sale, a copy of which is available on request. Third-party product and brand names may be trademarks or registered trademarks of their respective owners.

Note: The fuse rating is for guidance only. Please refer to the relevant databook for detailed specification. It is the responsibility of a qualified electrician/electrical engineer to select the correct cable size and fuse rating based on current regulation and site specific conditions. Mitsubishi Electric's air conditioning equipment and heat pump systems contain a fluorinated greenhouse gas, R410A (GWP:2088), R32 (GWP:675), R407C (GWP:1774), R134a (GWP:1430), R513A (GWP:631), R454B (GWP:466), R1234ze (GWP:7) or R1234yf (GWP:4). *These GWP values are based on Regulation (EU) No 517/2014 from IPCC 4th edition. In case of Regulation (EU) No.626/2011 from IPCC 3rd edition, these are as follows. R410A (GWP:1975), R32 (GWP:550), R407C (GWP:1650) or R134a (GWP:1300).

Effective as of May 2020

Green Gateway greengateway.mitsubishielectric.co.uk