1.0 INTRODUCTION

1.1 This Technical Note has been prepared by DTA Transport Planning Consultants on behalf of the applicant, Hargreaves to address transport comments raised by Hampshire County Council associated with planning application F/24/98415.

1.2 The applicant seeks permission planning application for construction of a 150m² coffee pod (Use Class E) on part of the car park associated with the existing Wickes DIY store at Unit F1, Hamilton Business Park, Hedge End, Southampton.

1.3 The application was supported by a Transport Statement (TS, DTA report reference 23448-01). Since the application was submitted, HCC as Local Highway Authority has reviewed the TS and has requested additional information relating specifically to delivery and servicing vehicles entering and departing the site.

1.4 HCC's formal response note to the TS review is contained within **Appendix A** of this note. For ease, the information requested by HCC is summarised in blue text prior to DTA commentary.

2.0 RESPONSE TO HCC COMMENT

2.1 **HCC:** Servicing is outlined to take place on site, with 3 parking spaces needing to be closed off whilst the delivery vehicle is on site… Whilst this is acceptable in principle, it is noted that the vehicle tracking for both delivery vehicles and refuse vehicles on site, that in addition to the 3 parking spaces outlined for closure, it is likely that a further 3 outside the retail unit will be inaccessible, and that a further 2 spaces are partially driven across.

2.2 As such, it would be requested that the tracking exercise is revisited, with adjustments made if necessary to a) affect less parking spaces; and b) show how parking spaces can be parked in by vehicles even with refuse / delivery vehicles in place.

2.3 **DTA**: A response to each of the above points are presented below:

2.4 a) The proposed operator of the site has confirmed that in terms of frequency, deliveries to a unit of this size would be limited to one daily delivery via a transit sized vehicle and one weekly delivery via an HGV (typically 7.5t goods vehicle). Refuse collection would be carried out periodically by a private commercial waste collector typically using a 6.6m long refuse vehicle.

2.5 As requested, the swept-path assessment has been revisited and presented in **DTA Drawing 23448-02a** (delivery vehicles) and **DTA Drawing 23448-02-2a** (refuse vehicle). The assessments demonstrate the following:

- Both daily delivery vehicle and refuse vehicle can be accommodated within bay 36;
- the weekly HGV delivery vehicle can be accommodated across bays 35 and 36.
- The arrangement would result in a maximum of five parking spaces (spaces 1, 2, 3, 35 and 36) becoming temporarily inaccessible during the visit of the HGV delivery vehicle.

2.6 These movements will be short in duration and infrequent, but will be carefully managed by the operator's management team. To support the deliveries and refuse collections, the following are proposed:

- temporarily positioning cones within relevant areas of the car park;
- Marshalling is to be provided when the HGV delivery vehicle reverses into the bays;
- Site specific advice (i.e. position to unload/load) will be made available to suppliers;
- The timing of arrival of the HGV delivery vehicle and refuse vehicle will be pre-arranged to ensure that the relevant arrangements can me made and spaces coned off in anticipation, thereby ensuring safe and efficient operation.

2.7 Even with five parking spaces being temporarily unavailable during deliveries, there will be ample spare capacity within the car park to accommodate the proposed development, as illustrated in the Transport Statement.

2.8 b) **DTA Drawing 23448-02-3a** presents a swept path assessment showing how car parking spaces near 35 and 36 can be parked in by vehicles with refuse / delivery vehicles in place. The assessment demonstrates that adjacent spaces can be safely parked in.

3.0 SUMMARY

3.1 This note address outstanding highways and transportation comments raised by Hampshire County Council (HCC) in respect of the current planning application F/24/98415. Based on the details set out above, it is considered that the comment raised by HCC highways has now been satisfactorily addressed. As such, it is anticipated that HCC should now be able to confirm there are no objections to the application on highways grounds.

Drawings

4.6t Light Van

Overall Length	5.885m
Overall Width	2.000m
Overall Body Height	2.526m
Min Body Ground Clearance	0.299m
Track Width	1.765m
Lock to lock time	4.00s
Kerb to Kerb Turning Radius	6.000m

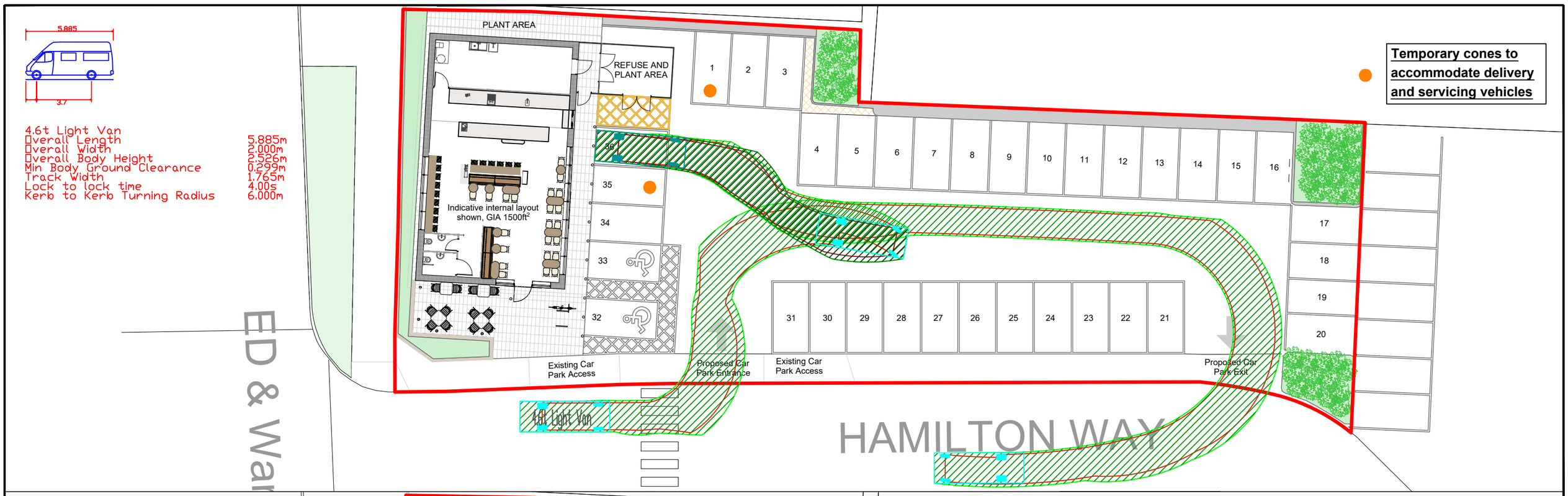

Delivery Vehicle

Overall Length	9.080m
Overall Width	2.550m
Overall Body Height	3.695m
Min Body Ground Clearance	0.490m
Track Width	2.550m
Lock to lock time	5.00s
Kerb to Kerb Turning Radius	8.500m

Based upon the ORDNANCE SURVEY MAPS with the permission of THE CONTROLLER OF HER MAJESTY'S STATIONERY OFFICE
© Crown Copyright AL 100030412

© David Tucker Associates

REV	DESCRIPTION	DRAWN	INITIALS	DATE

DTA
Transport Planning Consultants
Forester House, Doctors Lane,
Henley in Arden,
Warwickshire B95 5AW
Tel: +44(0)1564 793598
Fax: +44(0)1564 793983
www.dtatransportation.co.uk

JOB TITLE	CLIENT
Unit F1, Hamilton Business Park	Hargreaves

DRAWING TITLE
Vehicle Tracking Plan

Delivery

SCALE	DRAWN BY	DATE	DRAWING No	REVISION
1/250@A3	BP	27-11-24	23448-02	a

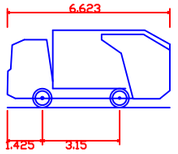

Small Refuse Vehicle

Overall Length	6.623m
Overall Width	2.200m
Overall Body Height	3.153m
Min Body Ground Clearance	0.358m
Track Width	2.200m
Lock to lock time	4.00s
Kerb to Kerb Turning Radius	6.750m

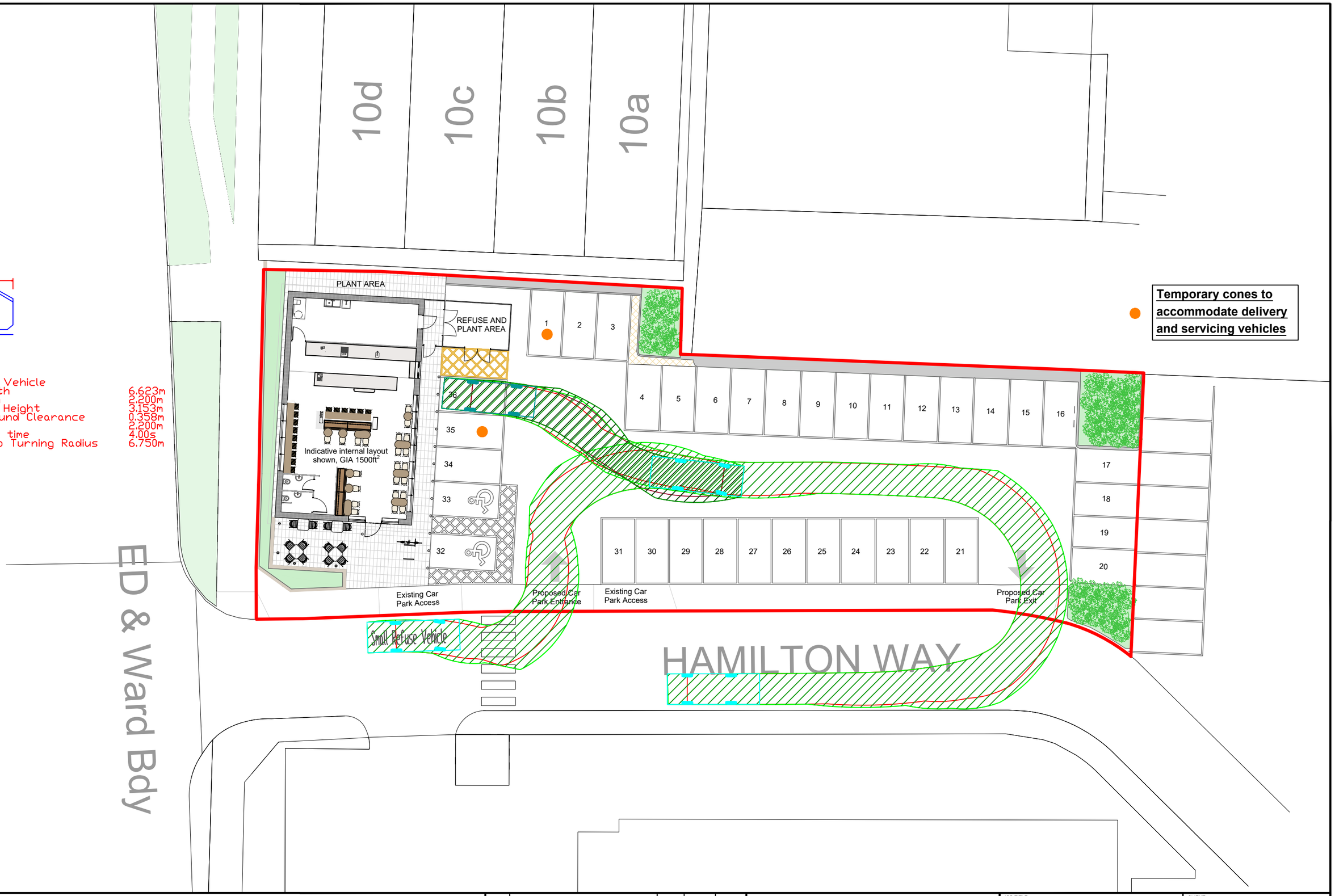

Based upon the ORDNANCE SURVEY MAPS with the permission of THE CONTROLLER OF HER MAJESTY'S STATIONERY OFFICE
© Crown Copyright AL 100030412

© David Tucker Associates

REV	DESCRIPTION	DRAWN	INITIALS	DATE

DTA
Transport Planning Consultants

Forester House, Doctors Lane,
Henley in Arden,
Warwickshire B95 5AW
Tel: +44(0)1564 793598
Fax: +44(0)1564 793983
www.dtatransportation.co.uk

JOB TITLE	CLIENT
Unit F1, Hamilton Business Park	Hargreaves

DRAWING TITLE
Vehicle Tracking Plan
Refuse

SCALE	DRAWN BY	DATE	DRAWING No	REVISION
1/250@A3	BP	27-11-24	23448-02-2	a

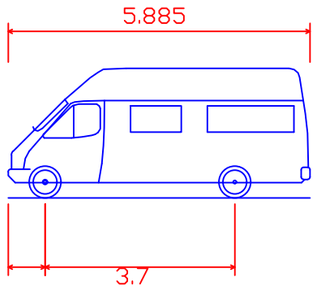

4.6t Light Van

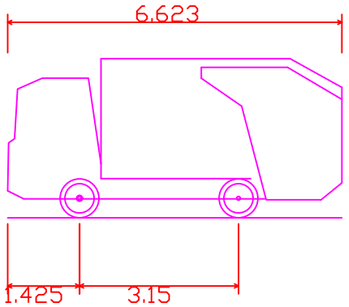

Small Refuse Vehicle

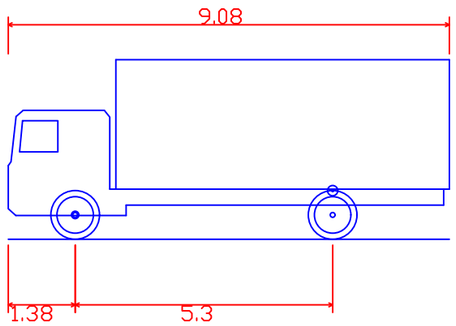

Delivery Vehicle

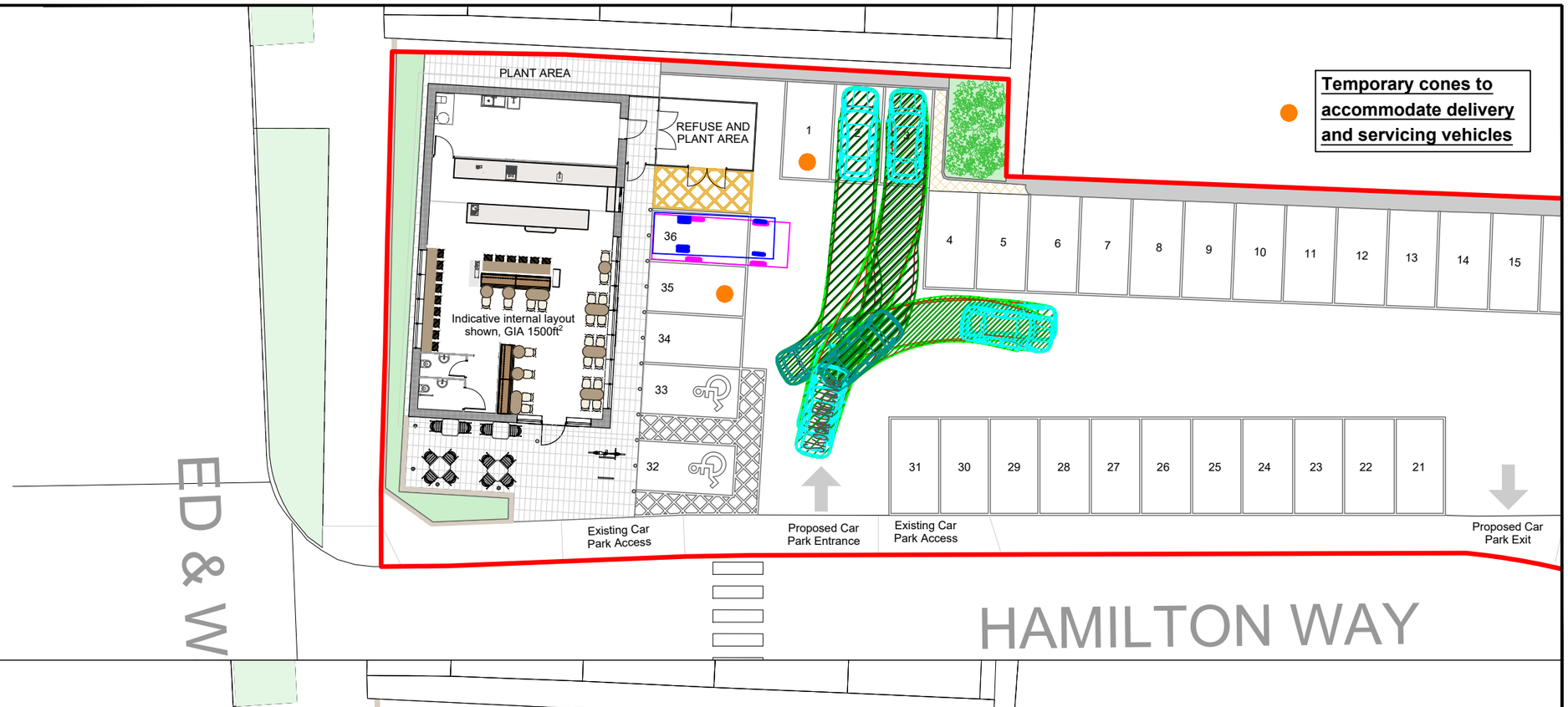

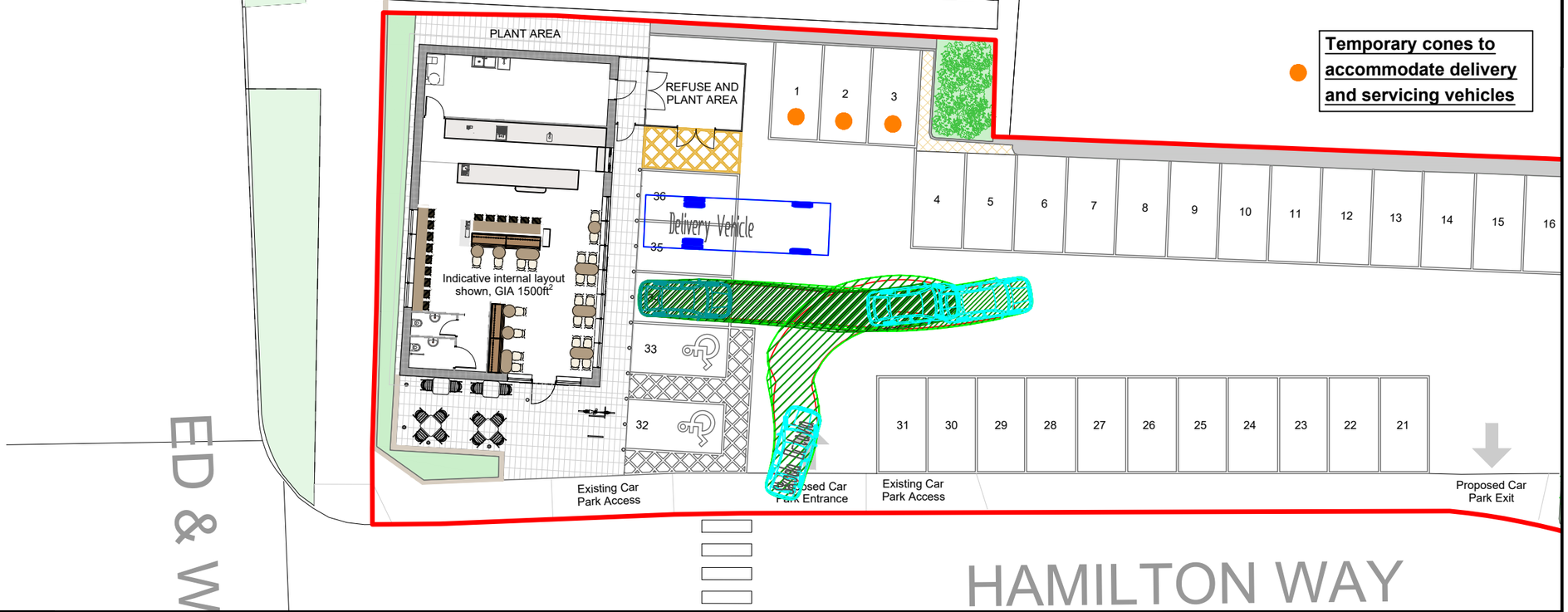

Based upon the ORDNANCE SURVEY MAPS with the permission of
THE CONTROLLER OF HER MAJESTY'S STATIONERY OFFICE
© Crown Copyright AL 100030412

© David Tucker Associates

REV	DESCRIPTION	DRAWN	INITIALS	DATE

DTA
Transport Planning Consultants
Forester House, Doctors Lane,
Henley in Arden,
Warwickshire B95 5AW
Tel: +44(0)1564 793598
Fax: +44(0)1564 793983
www.dtatransportation.co.uk

JOB TITLE: Unit F1, Hamilton Business Park

CLIENT: Hargreaves

DRAWING TITLE: Vehicle Tracking Plan
Car Parking

SCALE	DRAWN BY	DATE	DRAWING No	REVISION
1/250 @A3	BP	27-11-24	23448-02-3	a

Appendix A

Hampshire County Council

Hampshire 2050
The Castle
Winchester, Hampshire SO23 8UL

Telephone 0300 555 1375
Fax 01962 847055
www.hants.gov.uk

Eastleigh Borough Council
Eastleigh House
Upper Market Street
Eastleigh
SO50 9YN

Enquiries to	Matt Grantham	My reference	055029
Direct Line	N/A	Your reference	F/24/98415
Date	13 November 2024	Email	

For attention of Mr Huckfield

Dear Sirs

Re: F/24/98415 At UNIT F1, MANATON WAY, HEDGE END, SOUTHAMPTON, SO30 2XW

Proposed construction of single storey building to provide a coffee shop within part of existing car park area, together with associated rearrangement of car park access and layout and landscape planting.

In regard to application F/24/98415, having reviewed the information contained within the application pack, there would be no objection in principle to the proposals. However, prior to a formal recommendation being issued, it would be requested that additional and updated information is supplied as outlined below.

ACCESS:

It is proposed that access in and out of the site continues to be via two vehicle crossovers, one to the northern end of the existing car park area, and one to the south. The southern vehicle crossover is however relocated from its present position, being moved northwards to facilitate the new site and parking space layout.

Onwards, it is proposed that the car parking area will essentially become a one-way circulatory route with access from the southern crossover and exit via the northern crossover.

Whilst these proposals are acceptable, it should be noted by the applicant that even though Hamilton Way is not adopted highway, there would be a requirement for the existing southern crossover to be re-instated to full height

kerbs and footway, with the new southern vehicle crossover being provided prior to the development commencing, in order to fully retain access to the car park for the existing Wickes customers.

Appropriate signage highlighting access and egress points only will also be required, again needing to be in place prior to the start of works.

PARKING:

Within the associated Transport Statement (TS), parking is discussed, outlining how parking surveys undertaken on various days showed a peak utilisation of 31 parking spaces associated with the existing users of the site. Given the overall capacity of 74 spaces being available should the proposed development proceed, this would mean that 43 spaces would be available for the use of the proposed Coffee Shop.

Whilst it is for EBC to assess whether this provision is suitable, and in line with the EBC Parking Standards, it appears reasonable, particularly give the projections of 13 vehicle maximum at any one time, as highlighted in the Parking Accumulation Assessment table within the TS.

TRIP GENERATION:

Given that there is an existing coffee facility on site which will be replaced, along with the various other coffee purchasing options within a short distance of the site, it is not anticipated that any significant trip generation will occur as a result of the proposals. Trips will largely be pass-by, existing, or diverted trips from another local coffee destination.

SERVICING:

Servicing is outlined to take place on site, with 3 parking spaces needing to be closed off whilst the delivery vehicle is on site. Onwards a commitment is made for a Delivery Management Plan to be provided prior to opening, which will outline how deliveries will be managed.

Whilst this is acceptable in principle, it is noted that the vehicle tracking for both delivery vehicles and refuse vehicles on site, that in addition to the 3 parking spaces outlined for closure, it is likely that a further 3 outside the retail unit will be inaccessible, and that a further 2 spaces are partially driven across.

As such, it would be requested that the tracking exercise is revisited, with adjustments made if necessary to:

A) Affect less parking spaces; and

B) Show how parking spaces can be parked in by vehicles even with refuse / delivery vehicles in place.

If this work can be undertaken, then a re-assessment can be completed outlining how a delivery / refuse vehicle wont need to reverse onto Hamilton

Way, should a parked vehicle be in position blocking the delivery / refuse vehicle movement.

The results of this should also inform the Delivery Management Plan.

If the Case Officer is minded to permit the application despite the above concerns, it would be requested that the following conditions are put in place.

CONDITIONS:

ACCESS CONSTRUCTION PROVISION

No development shall start on site until the proposed southern access onto Hamilton Way, including the footway and/or verge crossing shall be constructed in accordance with the approved plans.

Reason - To provide satisfactory access and in the interests of highway safety.

CLOSURE OF EXISTING ACCESS PROVISION

Before use of the development is commenced the existing southern access from the site to Hamilton Way shall be permanently stopped up and effectively closed with the footway provided or verge reinstated, in accordance with details which have been submitted to and approved by the Planning Authority.

Reason - In the interests of highway safety.

CONSTRUCTION METHOD STATEMENT REQUIRED

No development shall start on site until a construction method statement has been submitted to and approved in writing by the Planning Authority, which shall include:
(a) A programme of and phasing of demolition (if any) and construction work;
(b) The provision of long term facilities for contractor parking;
(c) The arrangements for deliveries associated with all construction works;
(d) Methods and phasing of construction works;
(e) Access and egress for plant and machinery;
(f) Protection of pedestrian routes during construction;
(g) Location of temporary site buildings, compounds, construction material, and plant storage areas;
(h) Details of the methodology for ensuring dirt is not transferred onto the highway from the site (i.e. wheel washers), and onwards mitigation should this fail, such as the employment of mechanical road sweepers, and the subsequent refresh of street lining (as and when required) should this be damaged during the process.
Demolition and construction work shall only take place in accordance with the approved method statement.

Reason - In order that the Planning Authority can properly consider the effect of the works on the amenity of the locality.

DELIVERY MANAGEMENT PLAN

No development shall start on site until a Delivery Management Plan has been submitted and approved by the Local Planning Authority in consultation with the Highway Authority.

This plans must outline elements of on-site management, inclusive of how the vehicle parking spaces will be managed when deliveries are due, in order to ensure that (a) deliveries take place on-site and (b) unobstructed movement of customer vehicles through the site can be retained at such times.

Details on how this plan will be reviewed on a periodic basis and updated as necessary should also be provided.

Reason: In the interests of highway safety.

Yours faithfully,

Matt Grantham
Principal Transport Planner - Highway Development Planning
Hampshire 2050

Forester House
Doctor's Lane
Henley-in-Arden
Warwickshire
B95 5AW

Tel: +44(0)1564 793598
inmail@dtatransportation.co.uk
www.dtatransportation.co.uk