ecourban ARBORICULTURAL

Arboricultural Implications Assessment and Method Statement for Land at Stroudwood Lane, Upham

Arboricultural Implications Assessment and Method Statement

Land at Stroudwood Lane, Upham

Produced by:

Barrie Draper BSc (Hons) Arb TechCert(ArborA) CertArb(RFS)

Arboricultural Consultant

Report Ref: **241653 - AIA**

Report Date: **17 February 2025**

No.	Title	Page
1	Introduction	3
2	Site Visit, Description and Work Methodology	5
3	Arboricultural Implications Assessment	7
4	Summary of the implications of the development on trees	11
5	Preliminary Arboricultural Method Statement	12
Appendix 1	Tree Protection Plan	18
Appendix 2	Tree schedule and inventory	19
Appendix 3	Illustrative specification for tree protection barriers	23
Appendix 4	Illustrative specifications for 'low invasive' surfacing within Root Protection Areas	24
Appendix 5	BS 5837:2012 – Assessment categories	28
Appendix 6	Qualifications and experience of Barrie Draper	29

1 INTRODUCTION

1.1 **Instruction:** I am instructed by Mr and Mrs Wyre to report on trees which could be affected by a development proposal for land at Stroudwood Lane, Upham and prepare an Arboricultural Implications Assessment (AIA) and preliminary Arboricultural Method Statement (AMS) to support a planning application on the site.

1.2 **Document disclosure:** Initially, I was provided with a topographical survey (drawing reference 'Stroundwood Lane, Upham - Survey'). This showed the positions of the significant trees on or near the site, together with any existing or nearby buildings and any other important site features. Subsequently, I was supplied with a copy of the proposed layout, (drawing reference 'A24895[2.0]102.C3 Proposed Site Plan') showing a new site configuration.

1.3 **Scope of report:** All my tree observations are of a preliminary nature, with the tree survey carried out from ground level without any investigations using invasive or diagnostic equipment. I was not able to fully view all the trees detailed in this report from all directions, as some were located on adjacent private property. I have therefore confined observations of these trees to what was visible from within the site. I have not checked the accuracy of the positions of the trees shown on the provided plans and I have estimated all dimensions unless otherwise indicated.

1.4 **The Tree Protection Plan**: This is included in Appendix 1 and is a composite drawing derived from the information provided. It shows the existing landscape features (from the land survey) in grey superimposed over the proposed site changes shown in colour. This allows the relationship between the two to be clearly seen and an appropriate analysis of the implications of the proposed site changes to be undertaken. The Tree Protection Plan has also been annotated to show protection measures for any retained trees which could realistically be affected by the proposed development. It shows any activities in Root Protection Areas (RPAs) and if trees are to be removed, they are shown with a red dashed crown outline.

1.5 **Qualifications and experience:** This report is based on my site observations and I have come to my conclusions in the context of my experience as a former local government tree officer and a private practice arboricultural consultant. I have qualifications in both arboriculture and forestry and details of these, together with a career summary are provided in Appendix 6.

1.6 **Ecological issues and statutory tree protection:** Providing guidance on ecological issues is not within my sphere of expertise. However, trees and other vegetation can often provide nesting, roosting and feeding opportunities for protected species. Therefore, before any tree work proceeds on site, I advise that appropriate advice is sought to see whether the trees to be removed are being utilised by any protected species. At the time of writing, I have made no checks to ascertain whether any of the trees discussed are covered by tree preservation orders, or if the site is located within a conservation area. Therefore, any person intending to carry out any operations involving trees (before a formal planning consent is issued) should consult the council before any such works are undertaken.

2 SITE VISIT, DESCRIPTIONS AND SURVEY METHODOLOGY

2.1 **Site visit and description:** I visited the site on 13 January 2025 to gather my tree data. The site is located in Stroudwood Lane, which is situated in the Hampshire village of Upham. It is positioned on the eastern side of the road and consists of an agricultural barn with an area of hardstanding to the north and west. A linear grouping of oak trees is located to the south, with a further grouping of goat willow positioned to the north.

2.2 **Description of proposed development:** This development proposal is for the 'Erection of store and associated yard (B8 use) pursuant to PN/24/98380 following demolition and site preparation'.

2.3 **Soil assessment:** British Standard (BS) 5837:2012 Trees in relation to design, demolition and construction – Recommendations advocates that a soil assessment should be carried out to inform decisions relating to Root Protection Areas (RPAs), tree protection, new planting and foundation design. I have consulted the British Geological Survey (BGS) website and their Geology Viewer and this advises that the bedrock geology for the site is London Clay Formation - Clay, silt and sand. I did not undertake any excavations on site to confirm this and a full geotechnical site investigation may need to be undertaken to provide a more in-depth level of information regarding soil type for the site.

2.4 **Tree survey methodology:** My inspection of the trees was visual and did not involve any climbing or exploratory investigations. During my visit, I identified individual trees and obvious groups where this was appropriate and I assigned an identification number to each, as shown on the plan in Appendix 1. I then collected the tree data included in Appendix 2 and placed the vegetation in one of four categories (U, A, B or C), as set out in British Standard (BS) 5837:2012. I have included the BS categorisations in Appendix 5 for easy reference. Where of relevance, I also estimated the crown spreads for each tree/group at the appropriate cardinal compass points and this information is also shown in the tree schedule in Appendix 2. Although this document is not a full and detailed report on tree health and safety, any significant visible structural defects or physiological conditions identified, together with preliminary tree works, are also noted in the appropriate columns in the tree schedule. However, this report is not a tree condition survey and a full post development tree inspection is recommended to establish that the trees retained pose acceptable levels of risk once the development has been completed.

2.5 **Tree survey restrictions:** As discussed, many of the trees were located in areas that I was unable to access and some trees were covered in ivy. This, together with their close proximity to one another meant that some trees (or parts of trees) were not readily visible from all directions. These restrictions placed some significant limits on the capacity to assess tree condition and also on the use of laser measuring equipment, where clear line of sight is also required. I have therefore relied on an assessment of tree quality based on what was visible from vantage points around the site and I have estimated dimensions in accordance with the guidance set out in section 4.4.2.6 C of BS 5837:2012.

2.6 **Data interpretation:** The Root Protection Area (RPA) figures are included in Appendix 2. As set out in paragraphs 4.6.2 and 4.6.3 of BS 5837:2012, the RPAs may have been adjusted as a matter of arboricultural judgement to indicate the estimated likely position of important tree roots. These modified (or unmodified) RPAs can then help determine the location of the tree protection barriers and the position of any ground protection measures. Tree protection details are shown on the plan included in Appendix 1. Where there is a need for incursions into RPAs, an assessment of the implications of these activities is set out in Section 3 (Arboricultural Implications Assessment) of this report. Where appropriate, details of suitable work methodologies to protect trees and also mitigate any impact are set out in Section 5 (Arboricultural Method Statement).

3 ARBORICULTURAL IMPLICATIONS ASSESSMENT

3.1 **Introduction to the implications of the development proposal on trees:** BS 5837:2012 sets out in some detail how trees on development sites should be managed. It is usually accepted amongst arboriculturists that Category A (high quality) and Category B (moderate quality) trees are potential constraints on any development proposal. Trees and hedges belonging to Category C (low quality) are considered to be generally less important and such vegetation would not normally constrain site development proposals. Any trees/hedges graded Category U are in such poor condition that they are considered unsuitable for retention. This is because they cannot realistically be retained in acceptable condition in respect of the current land use for longer than 10 years. Therefore, these trees can be effectively discounted in the context of a planning application. On this site a total of seven individual trees/groups were recorded during the tree survey and these were assigned to the BS 5837:2012 categories, as set out in Table 1 below:

Category A and B trees	Category C trees	Category U trees
A total of three trees (T001, T004 and T005) were rated Category A and B	A total of four trees/groups (T002, T003, T006 and G007) were rated Category C	No trees, groups or hedges were rated Category U

Table 1: Tree numbers and BS categories

I have focussed on the implications of the development proposal mainly on the important trees on or near the site (Category A and B) in terms of tree loss/retention and by the extent of any incursions into and/or disturbance within Root Protection Areas (RPAs). I have also considered the implications for the Category C trees present. Of the total of seven trees/groups surveyed, most will be retained and only a small number of trees/stems are scheduled to be removed to facilitate this development proposal. Additionally, five trees will have activities arising from the development occurring within their RPAs. I have summarised the development related implications on trees in Table 2 below and set out the site tree issues in more detail in the following paragraphs.

Trees to be removed for development		Activities in RPAs arising from the development proposal	
Category A and B	Category C	Category A and B	Category C
None	Small number of trees in group G007	New security fence in RPAs of trees T004 and T005 Ground protection measures in RPA of tree T004 Surfacing upgrade in RPA of T005	New security fence in RPAs of trees T002 and T003 Surfacing upgrade in RPA of T006

Table 2: Trees lost and activities in RPAs arising from the development proposal

3.2 **Direct implications of the development proposal – Tree retention and loss**

3.2.1 **BS Category A and B trees to be retained (trees of high and moderate quality):** All the Category A and B trees surveyed will be retained and protected in accordance with the guidance set out in BS 5837:2012. Consequently, no high or moderate category trees will need to be removed to facilitate this development proposal.

3.2.2 **BS Category C trees to be removed (trees of low quality):** As discussed, trees belonging to Category C are not normally retained where they would impose a significant constraint on the development or redevelopment of a site. In this instance, a small number of Category C trees/stems in group G007 shown on the provided land survey drawing will likely need to be removed to allow the new storage yard to be formed. Most of the trees in the group will be retained and the trees to be lost will be from the inside (east) of the main grouping. I therefore feel that from outside of the site looking in, the tree cover in this area would likely appear to be largely unaffected. Consequently, I believe that there is unlikely to be any particular implications arising from the potential tree loss indicated.

3.3 Additional implications arising from the development proposal

3.3.1 **Trees and activities within RPAs:** Five trees will have activities arising from the development occurring within their RPAs. My comments on these issues are as follows:

- **New security fence:** Trees T002, T003, T004 and T005 could be affected by the position of the new fence because of the need for excavations within RPAs to accommodate upright posts to support steel mesh fence panels. I have set out some guidance in section 5.2.2 of this report on how this installation work should proceed in order to help reduce the risk of implications for these nearby trees. In my view, the ground disturbance from the quite narrow diameter holes is unlikely to have any significant implications for the nearby trees provided sufficient care is taken so that the holes are positioned to avoid large diameter (>25mm) tree roots and where appropriate, the holes are sleeved to prevent any contact between roots and wet concrete (which is injurious to tree roots). Provided the work proceeds in accordance with the methodology set out in this report, then I feel that any risk of implications for the nearby trees are likely to be low

- **Ground protection:** The protective barriers around tree T004 will need to be set back to allow sufficient room for the movement of materials and personnel during the construction phase of the project. The protective barrier positions around the trees are shown on the plan in Appendix 1. The area of the RPA that is outside of the barriers will be covered in ground protection and this will be installed after the erection of the barriers, but before any clearance or construction work starts on site. It is proposed that the ground protection will consist of a temporary cellular confinement system, which will be removed at the end of the development, with the area returned to soft landscaping. The provision of ground protection to allow access in RPAs is supported in paragraph 6.2.3 of BS 5837:2012 and I do not perceive this to be a particular problem provided it is implemented correctly and remains in situ during the construction phase of the project.

- **New surfacing:** The existing surfacing within the RPAs of trees T005 and T006 will need upgrading. After careful consideration and discussions with the client, it has been agreed that the sub base for the upgraded surfacing will be a cellular confinement system. This will reduce the need for significant excavation and disturbance within the RPAs of these nearby trees. The use of cellular confinement systems is supported in BS 5837:2012, together with bespoke suspended engineered solutions (paragraph 7.4.2.7 Note 1). The

surfacing will be installed before any clearance or construction activities occur on site and will act as ground protection throughout the construction phase. Consequently, the protective barrier positions shown on the plan included in Appendix 1 are set back from the full BS protection distances to allow space for this to be installed. I have also set out some guidance in section 5.2.3 of this report detailing how this work should proceed in order to help reduce the risk of implications for the nearby trees. Again, provided the work proceeds in accordance with this methodology, then I feel that the risk of any significant implications for the trees are also likely to be relatively low.

3.4 Additional site tree issues

3.4.1 **Tree protection during development:** A preliminary Arboricultural Method Statement is included in Section 5 and it details the various issues associated with successful tree protection in a development context on this site. If deemed appropriate by the council, this can be specifically referred to in a suitably worded planning condition attached to any subsequently issued planning consent.

4 SUMMARY OF THE IMPLICATIONS OF THE DEVELOPMENT ON TREES

4.1 **Summary:** Of the total of seven trees/groups surveyed, most will be retained and only a small number of trees/stems are scheduled to be removed to facilitate this development proposal. Additionally, five trees will have activities arising from the development occurring within their RPAs. The trees to be removed are part of a group, most of which will be retained and so there is unlikely to be any particular implications arising from their removal. Provided the tree protection measures set out in this report are realised and care is taken during the sensitive surfacing upgrade and fence installation works within tree RPAs, then the proposal is acceptable from an arboricultural perspective and the risk of significant implications for any retained trees are likely to be low.

5 PRELIMINARY ARBORICULTURAL METHOD STATEMENT

5.1 Tree protection issues

5.1.1 **Tree Protection Plan (TPP):** The plan in Appendix 1 is illustrative, but is based on the layout drawings and topographical survey provided. Therefore, all scaled measurements should be checked against the original design documents. The attached plan and all other information in this report should only be used for dealing with the tree protection issues and all other uses are prohibited, unless authorised by **eco**urban ltd. All the existing trees will have been numbered, with any higher categories (A and B) highlighted in green and blue rectangles and any low categories (C and U) highlighted in grey and red respectively. The plan also shows the locations of the proposed protective measures, including areas where special care may be required. Additionally, any trees to be removed are indicated with a red dashed outline. The TPP is an important document and a copy of it should be kept on site for reference during the construction phase of the project.

5.1.2 **Protective barriers:** The approximate location of the barriers is illustrated on the plan in Appendix 1 and information on barrier design based on BS 5837:2012 guidance is included in Appendix 3. The protective barriers will be erected before any materials or machinery are brought onto the site, and before any clearance or construction activities occur. With the exception of the barrier positions around trees T002, T003, T004 and T005 (see below), once the protective barriers have been positioned, these will stay in situ for the duration of the construction phase, unless previously agreed with the project arboricultural consultant or council's tree officer. There will be no access into the protected areas and the storage of excavated debris and building materials will be prohibited, unless authorised by the arboricultural consultant, after discussion with the council's tree officer. No fires or fuel storage will be allowed within (or near to) protected areas under any circumstances.

5.1.3 **Temporary repositioning of barriers:** With regard to trees T002, T003, T004 and T005, the barriers around the trees encompass an area where new security fencing is indicated. The tree protection barriers in this location will be redeployed to the edge of the construction zone to allow this activity to commence and then returned to the positions indicated on the TPP once the work has been completed. However, the movement of the barriers will only occur immediately prior to the commencement of these tree sensitive works, so as to reduce the risk of incidental construction related damage occurring to trees scheduled for retention. Tree protection barriers will be returned to original positioning until the end of the construction.

5.1.3 **Ground protection measures:** Where the positioning of tree protection barriers is not feasible due to the need for construction access, then ground protection measures will be needed to safeguard RPAs. The position of ground protection is shown on the plan included in Appendix 1. The ground protection will also be installed before any materials or machinery are brought onto the site and prior to any clearance or construction activities occurring. In this instance, it is proposed that the ground protection will consist of a temporarily installed cellular confinement system, as set out in section 5.2.3 below. Again, once the ground protection has been positioned, it will stay in situ for the duration of the construction phase, unless previously agreed with the project arboricultural consultant or council's tree officer.

5.2 **Arboriculturally sensitive operations**

5.2.1 **Activities within Root Protection Areas (RPAs):** Work within RPAs must be undertaken with care, as set out in the following text. Site personnel will be properly briefed before any activities start and all sensitive work will be inspected regularly during the course of operations.

5.2.2 **Installation of new security fencing:** Trees T002, T003, T004 and T005 could be potentially affected by this activity and great care must be taken to avoid damage, particularly to tree roots. With this in mind, I set out the following guidance to help minimise any risk of significant impact occurring:

- **Excavation for holes to accommodate fence uprights:** The excavation works will be undertaken using hand operated tools only, with operatives always checking for the presence of roots greater than 25mm diameter. If roots greater than 25mm diameter are encountered, then the hole will be either back filled and a new one excavated, or if large roots are encountered at the periphery of one or two sides of the excavated hole, then this may be widened away from any roots. Any small diameter tree roots (<25mm) can be cut, preferably to a side junction, using a sharp cutting tool such as bypass secateurs or handsaws. Once the uprights have been installed, the bottom of the fence panel will be accommodated at natural ground level, with no excavation required into the existing soil.

- **Use of concrete:** Concrete is phytotoxic to tree roots and so a dry concrete mix would be the preferred option for fixing the fence uprights in the ground. However, if wet concrete is to be used, then the excavated holes will be lined with minimum 1200 gauge polythene to avoid direct contact between tree roots and any wet concrete. Concrete

will be either brought to site ready mixed, or hand mixed in a designated batching area away from the trees. If site mixing, the designated batching area must be protected from any run off. Concrete is then to be moved from the batching area (or concrete lorry) to the excavated holes using wheel barrows and poured into the holes taking care to minimise any spillages. Polythene protection should be laid in and around the perimeter of the holes to avoid unnecessary soil/root contamination risk.

- **Vehicular access during installation phase:** Vehicular incursions into RPAs can be damaging to trees through soil compaction. Therefore, vehicular access across RPAs will not be permitted during the installation phase, with vehicles confined to the existing hardstanding area. Tree protection barriers will then be returned to the original positioning until the end of the construction phase.

5.2.3 **Upgrade of existing surfacing:** Trees T005 and T006 may be affected by this activity. I have shown the minimum extent of 'low invasive' type surfacing required to successfully retain the trees on the plan included in Appendix 1 and the extent of this is based on their BS derived RPAs. The cellular system will act as ground protection for the parts of the RPAs that are outside the protective barriers, and so will need to be installed before the main construction activity occurs on site. The use of a cellular confinement system is suggested in BS 5837:2012 as one appropriate way to achieve hard surfacing over tree roots and the following guidance is based on this principle. However, before implementation the following specifications and guidance will need to be reviewed by an engineering specialist, to ensure that the final construction is appropriate from an engineering viewpoint and suitable for the purpose intended.

- **Installation:** An installation video for a proprietary cellular confinement system is available to view at https://www.youtube.com/watch?v=OuyM1guylBM. Generally, any required changes in topography will be accomplished by the use of fill materials rather than cutting into the existing site levels, which could have a significant impact on tree health. Suitable fill materials include uncompacted crushed stone or sharp sand. In this instance, the removal of the top layer of existing compacted surfacing above any tree root activity to provide a flat surface for the installation of the cellular sub base should not damage any tree roots. However, this issue will need careful supervision at the time of implementation. Nonetheless, in the event that roots may need to be cut, those smaller than 25mm diameter may be pruned back, preferably to a side junction, using a cutting tool such as bypass secateurs or handsaws. Roots larger than 25mm should only be

severed following consultation with an arboriculturist, as they may be essential to tree health and stability.

- **Sub base and final wearing courses:** Once a level surface has been formed, the cellular system will be installed on top of the existing soil, with no compaction of its structure. The cell infill material will be crushed aggregate (typically Type 4/20mm or 20/40mm clean angular stone), with no fines, as per the manufacturer's specification. A temporary wearing course of tarmac and/or aggregate, separated by a geotextile membrane is likely to be the most appropriate way of providing a suitable ground protection/working surface during the clearance and construction phase of the project. At the final stages of the construction, the temporary wearing course will be removed (under arboricultural supervision), and the final surfacing will be installed. Suitable final wearing courses include resin bound gravel, paving slabs, washed gravel or block paviours set on a sand base, although other surfacing may be appropriate after consultation with an arboriculturist.

- **Edge retention:** The use of non-invasive ground contact structures (including proprietary edging products, gabions, wooden boards or railway sleepers) is suggested in BS 5837:2012 as effective edge supports in RPAs, to be secured by metal rods, track or road pins or wooden pegs. This, or a similar approach (negating the need for excessive ground disturbance within RPAs) will be used to minimise any adverse risk of impact on trees.

- **Illustrative specifications:** Final drawings will be prepared by the project engineer. These will be based on the illustrative manufacturers specifications for special surfacing included in Appendix 4, or an alternative 'low invasive' construction technique. These definitive plans can be secured by way of a suitably worded planning condition and approved by the council before any construction activity occurs on site.

5.3 Additional tree-related issues

5.3.1 **Site supervision:** Site personnel will be properly briefed regarding the tree protection issues before any work starts and the tree protection will be inspected periodically to ensure the retained trees are protected in accordance with this document and any conditions imposed by the council.

5.3.2 **Material storage areas and site compounds:** All construction material storage areas, cement silos or cement mixing areas, fuel storage points and compounds for machinery etc. will be outside protected areas, unless otherwise agreed with the council.

5.3.3 **Installation of new services or upgrading of existing provision:** Where practicable, all new services will be outside the protected areas indicated on the plan in Appendix 1, but where existing services within RPAs require upgrading or new provision is needed, great care will be taken to minimise any disturbance. Trenchless installation will be the preferred option, but if this is not feasible for any reason, then excavation will be carried out by hand in accordance with the guidelines set out in NJUG Volume 4 - Guidelines for the Planning, Installation and Maintenance of Utility Apparatus in Proximity to Trees.

5.3.4 **Site offices, welfare facilities and contractor's car parking:** Whilst it is possible to have site offices and welfare facilities within RPAs, care is needed in their positioning and also in the connection of water, electricity and drainage to service them. Therefore, these will generally be sited outside the tree RPAs, unless agreed previously with the council. Contractor's car parking facilities will also be located away from retained trees.

5.3.5 **Tree works:** Any tree pruning or tree removal operations are set out in the tree schedule included in Appendix 2. Additionally, those trees scheduled for removal are also shown on the Tree Protection Plan included in Appendix 1.

5.3.6 **Planning, communication and preliminary timing of events:** It is not unusual for the details of timing of operations which could impact on important trees to only be finalised once planning consent has been given. Site managers, clearance and construction teams and other important personnel are normally only appointed at this stage and it is these people who will be crucial in delivering the tree protection detailed in this report. My experience is that the pre commencement site meeting is critical in terms of avoiding damage to trees and this particular aspect, along with tree protection issues can be specifically referenced in a suitably worded planning condition imposed by the council. In the intervening time, I propose the following preliminary cascading timetable of events to help minimise the risk of impact on important trees. However, the following schedule may be modified at the pre-commencement meeting, subject to discussion with all parties and agreement with the council:

1. Pre-commencement site meeting
2. Extent of any arboricultural supervision agreed

3. Tree works undertaken
4. Protective barriers erected before any clearance or construction activities occur on site and notification to the council that this is in place
5. Ground protection installed before any clearance or construction activities occur on site and notification to the council that this is in place
6. Installation of new surfacing – Where this is to also act as ground protection, this must be installed before any clearance or construction activities occur on site
7. Redeployment of tree protection barriers and installation of new security fence. Tree protection barriers then returned to original positioning.
8. Tree protection only removed at the end of the construction phase when there is no longer any risk to trees

Barrie Draper **BSc (Hons) Arb TechCert(ArborA) CertArb(RFS)**
Arboricultural Consultant

Date: **17 February 2025**

1 A2 plan

Indicative North

G007
Goat willow

Existing Bund

Shrubbery cut back

Shrubbery cut back to roadside

New Permeable Storage Yard

Hay pile removed

overgrown no access to survey

New Tarmacadam Yard Area

New boundary fence

2700k temperature downward LED lighting to front of building

Minimum extent of low invasive surfacing

New access gates set back from road

Small area of ground protection for construction access

Slab 43.59

Eaves 48.59

2700k temperature emergency bulkhead LED lighting linked to fire alarm to escape route

New security fencing

1.0m wooden post & barbed wire fence

T006
Pedunculate oak

T005
Pedunculate oak

T004
Pedunculate oak

T003
Pedunculate oak

T002
Pedunculate oak

T001
Pedunculate oak

New tarmacadam yard area

New permeable Storage yard, compacted Type 1 MOT

Block paved parking spaces and front path

New paved fire escape route

SCALEBAR 1/200

ecourban ARBORICULTURAL

ECO 1 - TREE PROTECTION FOR
LAND AT STROUDWOOD LANE, UPHAM

SCALE: 1:200 @ A2

COMPOSITE PLAN:
LAND SURVEY IN GREY,
PROPOSED LAYOUT IN COLOUR

T1 Tree sp — **BS Category A:** Trees of high quality and value

T1 Tree sp — **BS Category B:** Trees of moderate quality and value

T1 Tree sp — **BS Category C:** Trees of low quality and value

Tree protection barriers

RPA outside barriers where 'Low Invasive' type surfacing is to be installed

RPA outside barriers where 'Low Invasive' type surfacing is to be installed as temporary ground protection

Root Protection Areas (RPAs): Below ground tree constraints for retained trees based on BS 5837 guidance

Trees to be removed

This drawing was originally produced in colour, therefore any subsequent monochrome photocopies may not show appropriate levels of detail and should not be relied upon for the purposes of dealing with site tree issues

Appendix 2: Tree Schedule and Inventory

Background fill colour represents BS 5837:2012 categories: A Category trees have green backgrounds, B Category trees have light blue backgrounds, C Category trees have grey backgrounds and U Category trees have red backgrounds.

Tree No.	Species	Ht (m)	No. of stems	Stem dia. at 1.5m (mm)	Combined stem diameter (mm)	Branch spread (m)				Ht above ground (m)	Age class	Notes	Management proposals	BS cat	RPA area (m²)	RPA radius (m)
						N	E	S	W							
All trees													Where needed for construction access, crown lift trees by up to 4m over site			
T001	Pedunculate oak *(Quercus robur)*	15	1	900#	-	9	8	9	8	4	Mature	Offsite tree, part of linear group of boundary trees. No direct access to survey. Ivy on main stem and scaffolds. Some dead wood in canopy.		A1	366	10.8
T002	Pedunculate oak *(Quercus robur)*	9	1	300#	-	4	4	4	4	3	Young	Small, offsite tree, part of linear group of boundary trees. No direct access to survey and restricted clear line of sight due to lorry trailer position.		C1	41	3.6
T003	Pedunculate oak *(Quercus robur)*	7	1	300#	-	4	4	4	2	3	Young	Small, offsite tree, part of linear group of boundary trees. No direct access to survey. Unbalanced canopy due to proximity to adjacent tree.		C1	41	3.6

Appendix 2: Tree Schedule and Inventory

Tree No.	Species	Ht (m)	No. of stems	Stem dia. at 1.5m (mm)	Combined stem diameter (mm)	Branch spread (m)				Ht above ground (m)	Age class	Notes	Management proposals	BS cat	RPA area (m²)	RPA radius (m)
						N	E	S	W							
T004	Pedunculate oak *(Quercus robur)*	13	1	650#	-	5	6	6	2	4	Early Mature	Offsite tree, part of linear group of boundary trees. No direct access to survey. Some crown asymmetry and deadwood in canopy.		B1	191	7.8
T005	Pedunculate oak *(Quercus robur)*	19	1	1100#	-	9.0	9.0	9.0	8.0	5	Mature	Offsite tree, part of linear group of boundary trees. Limited access to survey. Ivy on main stem and scaffolds and some deadwood in canopy.		A1	547	13.2
T006	Pedunculate oak *(Quercus robur)*	10	1	450#	-	4.0	2.0	4.0	4.0	3	Early Mature	Offsite tree, part of linear group of boundary trees. Limited access to survey. Unbalanced canopy due to proximity to adjacent tree.		C1	92	5.4
G007	Goat willow *(Salix caprea)*	7	1	200# Avg.	-	6	4	3	1	2	Early Mature	Grouping of closely spaced trees/shrubs. Usual poor form and structural deficiencies associated with species. Severely pruned branches by motorised flail west side. No access to survey due to dumped farm detritus and brambles.	Fell trees/stems as per site plan in Appendix 1.	C1	18	2.4

Appendix 2: Tree Schedule and Inventory

Abbreviations:

Abbreviations	Meaning	Abbreviations	Meaning	Abbreviations	Meaning
T	*Individual tree*	**M**	*Mature*	>	*More than*
G	*Groups of trees*	**MA**	*Maturing*	<	*Less than*
H	*Hedge*	**Y**	*Young*	**Lgst**	*Largest tree diameter within group*
W	*Woodland*	**RPA**	*Root Protection Area*	**Avg**	*Average tree diameter within group*

Tree Schedule Notes:

Tree number	*Assigned during the site visit and also referenced on the plan in Appendix 1.*
Species	*Common name and referenced to scientific name in the above list. Where I have some doubt over the actual tree species, the genus will have been noted followed by sp. Where trees are numerous and present in groups, not every individual species may have been noted.*
Height	*Measurement of total tree height using a laser hypsometer to nearest metre or where clear line of site is not possible then an estimate based on interpolation of heights of nearby measured trees.*
Stem diameters	*Measurement of stem diameter either at 1.5m above ground (or in accordance with BS guidance where trees have multiple stems) with a forester's girth measuring tape.* ***Diameters followed by asterisk symbol indicate estimated diameters because of access difficulties, presence of ivy or other obstructions.*** *Where trees are present in a group, the tree with the largest stem diameter within the group will have been measured/estimated.*
Branch spread	*Where appropriate and where ground conditions allow, an estimate of the crown spread at each of the cardinal compass points. Where only part of the site is affected by trees, measurement may be in one or two directions only*
Existing height above ground level	*Distance in metres to first significant branch or canopy or a height above which crown lifting operations would not be appropriate*
Age class	*Simplistic estimate of tree age in one of FOUR categories (young, maturing, mature or over mature).*

Appendix 2: Tree Schedule and Inventory

Notes	*Although this document is not intended to be a full and detailed report on tree health and safety, any significant structural defects or physiological conditions have been identified where these were visible. Where no entries are recorded, this indicates no observable issues were identified. Where there is restricted access to the base of a tree, its attributes are assessed from the nearest point of access. Climbing inspections are not carried out during a walkover tree survey and, if heavy ivy is present, tree condition is assessed from what can be seen from the ground.*
Management proposals	*The inspection of all trees was of a preliminary nature and only defects visible from the ground have been identified. Each individual tree may not have been inspected closely because of access difficulties and only defects visible from the inspection point have been identified. Monitoring may be indicated where tree risk can be adequately managed by increased frequency of site inspections. Further investigation may be indicated where additional data may be required beyond a purely visual assessment. However, a full post development tree inspection is recommended to establish that the trees retained during construction pose acceptable levels of risk once the development has been completed.*
BS 5837 :2012 Category	*Either U, A, B or C based on the BS 5837:2012 guidance.*
RPA and RPA radius	*RPA and RPA radius calculations have been undertaken in accordance with the guidance set out in BS 5837:2012.*

Appendix 3: Illustrative Specification for Tree Protection Barriers

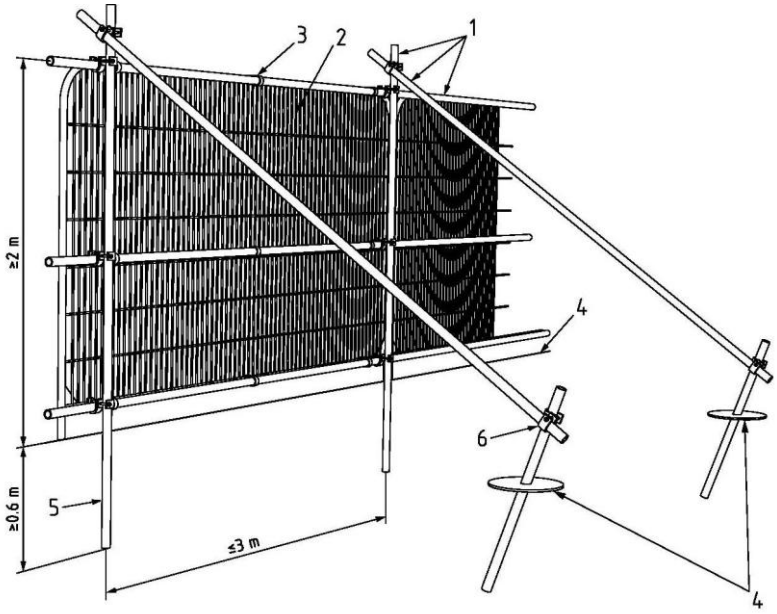

Key

1 Standard scaffold poles
2 Heavy gauge 2 m tall galvanized tube and welded mesh infill panels
3 Panels secured to uprights and cross-members with wire ties
4 Ground level
5 Uprights driven into the ground until secure (minimum depth 0.6 m)
6 Standard scaffold clamps

Illustration taken from British Standard 5837 (2012): Trees in relation to design, demolition and construction – Recommendations.

The default specification should consist of a vertical and horizontal scaffold framework, well braced to resist impacts. The vertical tubes should be spaced at a maximum interval of 3 m and driven securely into the ground. Onto this framework, welded mesh panels should be securely fixed.
– BS 5837:2012

Ref: Tree Protection Barriers (Type 1)	**Drawing No. TPB1**
Scale: N/A	

Appendix 4: Illustrative Specification for 'Low Invasive' Surfacing within RPAs

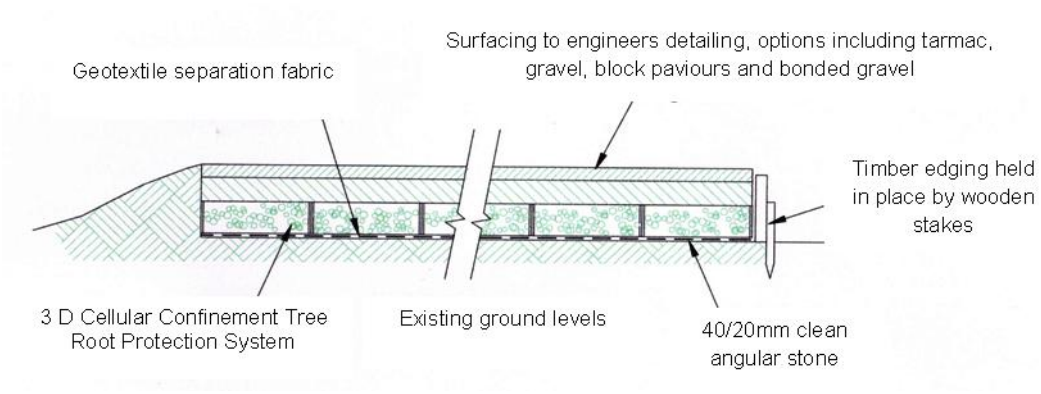

Illustration adapted from original drawings provided by Geosynthetics Ltd.

Appropriate sub-base options for new hard surfacing include three-dimensional cellular confinement systems. Alternatively, piles, pads or elevated beams can be used to support surfaces to bridge over the RPA or, following exploratory investigations to determine location, to provide support within the RPA while allowing the retention of roots greater than 25 mm in diameter.

– BS 5837:2012

Ref: No dig surfacing	**Drawing No. NDS 1**
Scale: N/A	

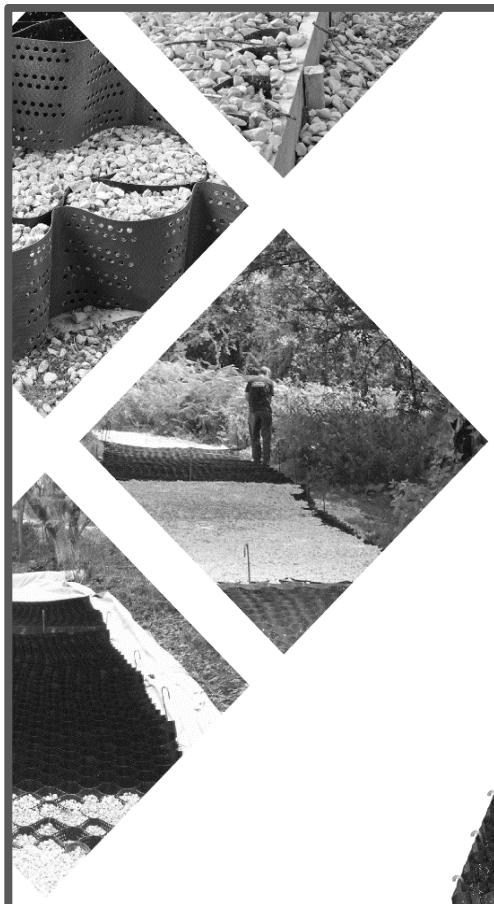

Cellweb®TRP

Why protect trees?

Trees provide a wealth of benefits within the urban environment including cleaning the air, prevention of flooding and moderation of the climate.

As a result, within the UK it is an offence to cut down, lop, uproot, top, wilfully damage or destroy a protected tree without authorisation. Fines, if the defendant is found guilty in a Crown Court, are unlimited.

To minimise the environmental impact and avoid legal proceedings, we offer the independently tested Cellweb®TRP system.

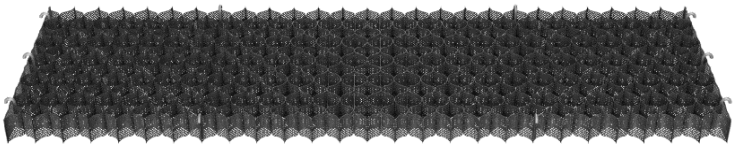

What is Cellweb®TRP?

Cellweb®TRP is a cellular confinement system specifically designed for tree root protection. The system creates a stable, load-bearing surface for traffic or footfall whilst eliminating damage to roots through compaction and desiccation.

The Cellweb®TRP system comprises of three specific elements, Cellweb®TRP, Treetex™ pollution control geotextile and an infill of clean angular stone. The system has been designed to create an unparalleled solution to tree root protection applications.

Cellweb®TRP is a no-dig solution that ensures that the load placed upon it is laterally dissipated rather than transferred to the soil and roots below. The use of Treetex™ pollution control geotextile allows for drainage and separation whilst preventing contaminants from reaching the roots.

The walls of the cells are perforated and when combined with the infill of clean angular stone, enables free movement of water and oxygen, ensuring that supplies to the tree roots are maintained.

Geosynthetics
Engineered Solutions

"Creating Innovative Solutions with Outstanding Products"

What makes Cellweb®TRP different?

With over 15 years of captured data and thousands of installations, the Cellweb®TRP system has developed a reputation for excellence.

We are so confident in our system, we offer a guarantee that covers the replacement of the trees and of the system itself. With Cellweb®TRP being quick to install and having a 100% success rate it is clear to see why the Cellweb®TRP is regularly specified by tree officers and arboriculturalists across the country.

From the drawing board to installation, we are here to help.

We have been supplying the Cellweb®TRP system since 1998 and our technical team have vast experience with tree root protection and the associated legislation.

Delivering complete peace of mind to customers is our number one priority. As part of this customer care package we offer free on site consultations, technical recommendations and on site installation guidance on all projects.

Our in-house engineering team provide site specific recommendations to ensure the solution used is cost effective and environmentally sound.

For more information on Cellweb®TRP or Geosynthetics Limited please contact our sales office on 01455 617139 or visit www.geosyn.co.uk.

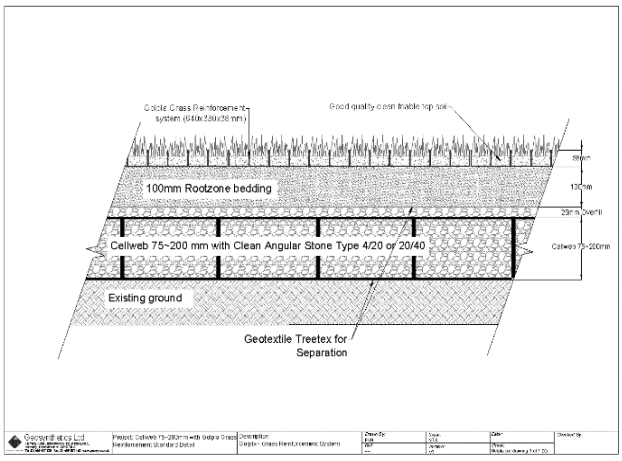

ISOQAR UKAS 0026 CERTIFICATE NO. 11161 ISO 14001:2004

ISOQAR UKAS 0026 CERTIFICATE NO. 11161 ISO 9001:2008

INVESTORS IN PEOPLE | Bronze

Geosynthetics Limited | Fleming Road | Harrowbrook Ind Est | Hinckley | Leicestershire | LE10 3DU
sales@geosyn.co.uk | Tel: 01455 617 139 | Fax: 01455 617 140 |www.geosyn.co.uk

PRODUCT DATA SHEET

Geosynthetics Limited Tel: 01455 617 139 Fax: 01455 617 140 Email: sales@geosyn.co.uk

Clean Angular Stone

Type 4/20

Specification for open graded subbase for use as storage below pervious pavements (also Coarse Aggregate in accordance with Series 500 Clause 503) Type 4/20.

Material to BS EN 13242 or BS EN 12620
Material to comprise crushed rock, concrete or blast furnace slag or similar approved.
Crushed rock from granite, basalt, gabbro
Concrete with more than 90% fractures faces.

Materials NOT permitted/NOT recommended:
Crushed gravel
Limestone
River gravel
Single size aggregate
Rounded aggregate

Properties	Test Method	Value	Comments
Grading	BS EN 13242	Grading 4/20 (Preferred) or 4/40, Gc 80/20, GTc 20/15	Aggregate size in mm
Fines Content	BS EN 13242	f_4	Mass fraction of passing 0.063mm sieve <4%
Shape	BS EN 13242	FI_{20}	Flakiness Index <20
Resistance to Fragmentation	BS EN 13242	LA_{30}	Los Angeles coefficient <30
Durability:			
- Water absorption to BS En 1097-6:2000, Clause 7	BS EN 13242	$WA_{24}2$	Water abs 24h <2%
- For WA > 2%, magnesium sulfate soundness	BS EN 13242	MS_{18}	Magnesium Sulfate loss (by mass) <18%
Resistance to Wear	BS EN 13242	$M_{DE}20$	Micro Deval Coefficient <20
Acid-soluble sulfate content:			
- Aggregates other than air-cooled blast-furnace slag	BS EN 13242	$AS_{0.2}$	Less than 0.2% by mass
- Air-cooled blast-furnace slag	BS EN 13242	$AS_{0.1}$	Less than 0.1% by mass
Total Sulfur:			
- Aggregates other than air-cooled blast-furnace slag	BS EN 13242	$\leq$ 1 % by mass	
- Air-cooled blast-furnace slag	BS EN 13242	$\leq$ 2 % by mass	
Volume Stability of blast-furnace and steel slags:			
- Air-cooled blast-furnace slag	BS EN 13242	Free from dicalcium silicate and iron disintegration in accordance BS EN 13242:2002, 6.4.2.2: V_5 (expansion by volume less than 5%)	
- Steel slag	BS EN 13242		
Leaching of contaminants	BS EN 13242	Blast furnace slag and other recycled materials should meet the requirements of the Environment Waste Acceptance Criteria for inert waste when tested in accordance with BS EN 12457-3	

If compaction is required should be in 150mm layers with 4 passes of a smooth wheeled roller max weight of 1000kg/m width **without vibration**.

Aggregate gradings for sub-base materials to BS EN 12620
Recommended grading is 4mm to 20mm Type 4/20. Other gradings may be used such as 4/40, if they meet all the requirements.

NOT to use single size aggregate.

Sieve Size (mm)	Percentage Passing (%)	
	Coarse aggregate 4/40	Coarse aggregate 4/20
80	100	-
63	98-100	-
40	90-99	100
31.5	-	98-100
20	25-70	90-99
10	-	25-70
4	0-15	0-15
2	0-5	0-5

This information corresponds to our current knowledge on the subject. It is offered solely to provide possible suggestions for your own experimentation. It is not intended, however, to substitute for any testing you may need to conduct to determine for yourself the suitability of our products for your particular purposes. This information may be subject to revision as new knowledge becomes available. Since we cannot anticipate all variations in actual end use conditions, Geosynthetics Limited makes no warranties and assumes no liabilities in connection with this information. Nothing in this publication is to be considered as a licence to operate under or a recommendation to infringe any patent right.

DR: 97/V2/04.06.2021

Appendix 5: BS 5837:2012 – Assessment Categories

TREES FOR REMOVAL		
Category and definition	**Criteria**	**Identification on plan**
Category U Those in such a condition that they cannot realistically be retained as living trees in the context of the current land use for longer than 10 years	• Trees that have a serious, irremediable, structural defect, such that their early loss is expected due to collapse, including those that will become unviable after removal of other category U trees (e.g. where, for whatever reason, the loss of companion shelter cannot be mitigated by pruning) • Trees that are dead or are showing signs of significant, immediate, and irreversible overall decline • Trees infected with pathogens of significance to the health and/or safety of other trees nearby, or very low quality trees suppressing adjacent trees of better quality *NOTE Category U trees can have existing or potential conservation value which it might be desirable to preserve.*	RED

TREES TO BE CONSIDERED FOR RETENTION				
Category and definition	**Criteria — Subcategories**			**Identification on plan**
	1 Mainly arboricultural qualities	**2 Mainly landscape qualities**	**3 Mainly cultural values, including conservation**	
Category A Trees of high quality with an estimated remaining life expectancy of at least 40 years	Trees that are particularly good examples of their species, especially if rare or unusual; or those that are essential components of groups or formal or semi-formal arboricultural features (e.g. the dominant and/or principal trees within an avenue)	Trees, groups or woodlands of particular visual importance as arboricultural and/or landscape features	Trees, groups or woodlands of significant conservation, historical, commemorative or other value (e.g. veteran trees or wood-pasture)	GREEN
Category B Trees of moderate quality with an estimated remaining life expectancy of at least 20 years	Trees that might be included in category A, but are downgraded because of impaired condition (e.g. presence of significant though remediable defects, including unsympathetic past management and storm damage), such that they are unlikely to be suitable for retention for beyond 40 years; or trees lacking the special quality necessary to merit the category A designation)	Trees present in numbers, usually growing as groups or woodlands, such that they attract a higher collective rating than they might as individuals; or trees occurring as collectives but situated so as to make little visual contribution to the wider locality	Trees with material conservation or other cultural value	BLUE
Category C Trees of low quality with an estimated remaining life expectancy of at least 10 years, or young trees with a stem diameter below 150 m	Unremarkable trees of very limited merit or such impaired condition that they do not qualify in higher categories	Trees present in groups or woodlands, but without this conferring on them significantly greater collective landscape value; and/or trees offering low or only temporary/transient landscape benefits	Trees with no material conservation or other cultural value	GREY

Appendix 6: Qualifications and Experience of Barrie Draper

1 **Qualifications:** I have a BSc degree (with Honours) in Arboriculture from the University of Central Lancashire. I also hold a BTEC Higher National Diploma (HND) in Forestry (Lowland Management), the Arboricultural Association's Technician's Certificate in Arboriculture (Tech Cert), the Royal Forestry Society's Certificate in Arboriculture (Cert Arb) and the National Examinations Board (NEB) Certificate in Forestry.

2 **Career experience:** I began my arboricultural career in 1993 as an arborist with Portsmouth City Council. During my time with the council I worked for both the direct labour organisation and for a private contractor where I obtained valuable hands on experience in all aspects of arboriculture. From 1999 to 2002 I was employed as Senior Arborist by Parchment Housing Group, a housing association based near Portsmouth. I managed the Groups' tree stock on their behalf, carrying out tree inspections and practical management operations. I have also worked in local government, spending time with Thurrock Borough Council in Essex where I was the Tree and Landscape Officer, and with Winchester City Council, where I was Arboricultural Officer for a period of 2 years. During my time working in local government, I was responsible for making Tree Preservation Orders, administering applications to work on protected trees and advising on planning applications when trees were considered potential constraints on development. Working within a planning environment allowed me to gain valuable experience in the management of trees in development situations and an understanding of the planning process and how it relates to trees. From January 2005 I worked for Barrell Tree Consultancy Ltd advising clients on a wide range of tree related issues. I then left the company in September 2008 and set up **eco**urban ltd.

ecourban
ARBORICULTURAL

ecourban ltd, 13 The Greencroft, Salisbury SP1 1JD

T: 07532 373 563 E: barrie@eco-urban.co.uk

W: www.eco-urban.co.uk