Uniclass L7314:P7114			
CI/SfB	(52.5)	Xn6	1214

Swish®
BUILDING PRODUCTS

Sustainable Rainwater Systems

84 percent recycled content

70 percent carbon saving

KM508760

BES 6001 Responsible Sourcing
www.greenbooklive.com

bsi. ISO 9001 Quality Management
FM 09180

bsi. ISO 14001 Environmental Management
EMS 513947

bsi. OHSAS 18001 Occupational Health and Safety Management
OHS 523157

The Specifier's Choice for Sustainable PVC Roofline, Cladding and Rainwater Systems

www.swishbp.co.uk

Introduction

Swish Rainwater systems are ideal for those who wish to specify quality products that have a reduced carbon footprint. They are unique in the UK in that they contain a high proportion of post consumer recycled PVC. Approximately 84% by weight of Swish gutters and pipes is composed of recycled material that is derived from old PVC windows and gutter systems that have been removed from buildings when refurbished or demolished.

Gutters and Pipes

Swish gutters and pipes are two-tone in appearance. The core recycled material is grey and has been left this colour in order to avoid the unnecessary use of additional colouring agent.

The outer skin is virgin material that is co-extruded onto the surface of the core to enhance the finished appearance and to aid colour matching.

The production of PVC components from recycled material requires a fraction of the energy needed to make virgin PVC.

A 70% saving in CO_2 output is made during production of Swish gutter and pipe profiles, when compared to production of 100% virgin material.

This innovative design results in a far more sustainable product without any compromise in strength, weather resistance or functionality.

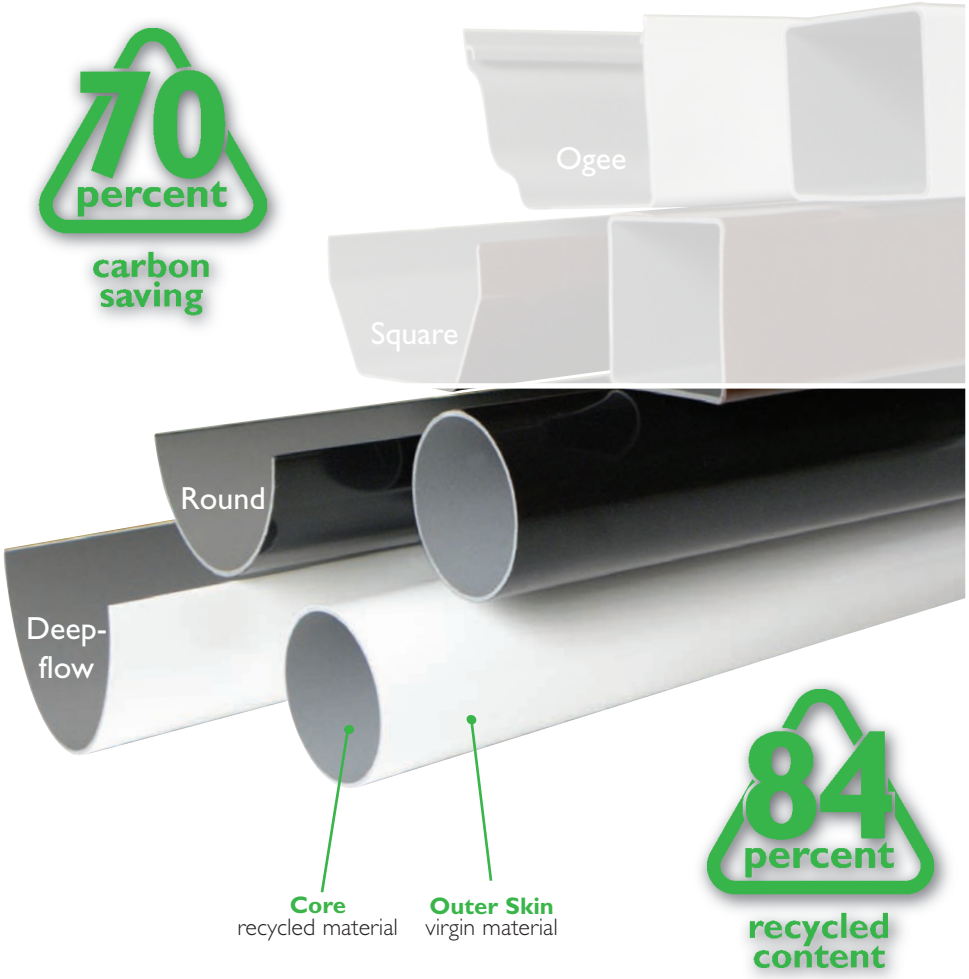

Accessories

Swish Rainwater accessories are injection moulded using virgin PVC. These components incorporate a simple clip together system for fitting gutter and pipe profiles. The gutter clips include pre-installed seals that are lubricated during manufacture to ease the clipping process.

Certification

Swish rainwater systems are manufactured to the following standards:

KM508760

- Kitemark KM508760
- BS EN 607:2004 (Eaves Gutters & Fittings)
- BS EN 12200-1:2000 (Plastic Piping Systems)
- BS EN 1462:2004 (Brackets for Eaves Gutters)
- Manufactured under ISO 9001 Quality, ISO 14001 Enviromental and OHSAS 18001 Health & Safety Management Systems

Swish Roofline & Cladding Systems

Swish Cellular PVC is suited to the exposed conditions encountered on clad facades and at the roofline. Situated in elevated positions and subject to extreme weather conditions, these areas are difficult and costly to access and maintain. Cellular PVC requires no maintenance; it will last the life time of the building and can be fully recycled at the end of its service life.

Swish BUILDING PRODUCTS

Specification Guidance

General

Swish Rainwater systems are designed for application in most domestic properties throughout the UK.

The following information is given to help specifiers determine the basic requirements of a gutter system. Swish Technical Services can provide further information and guidance as required. Tel: 01827 317238

System Performance

To determine the elements of the gutter system the designer must calculate the likely quantity of rainwater run-off from the roof as follows:–

- Decide on the local rainfall intensity that the system must cope with.
- Calculate the effective roof area (m^2) to be drained.

To meet these requirements, the designer will need to:

- Choose a gutter with sufficient flow capacity (litres per second)
- Decide on the system layout including the fall of gutter and the number and position of outlets required to maximise the flow.

Rainfall Intensity

BS EN 12056 suggests likely rainfall intensities for different areas of the UK, which may be experienced as unusual events of 2 minutes duration, once every 1, 5, 50 and 500 years. The volume of water involved in these events increases as they get rarer, but because of their relative infrequency, it is suggested that domestic gutter systems should be designed for a storm event that is likely to occur once a year. The intensity of such an event will vary across the UK, but it is sensible to design a system for a minimum intensity of 75mm/hour per m^2 or a flow rate of 0.021 litres per second.

Roof Area

The area of roof that drains into any one gutter (effective roof area : m^2) can be calculated in two ways (see diagram):–

- (H/2) + W x L
- L x W x Pitch Factor

A selection of pitch factors is shown in table A. For other pitch factors please contact Swish Technical Services.

Table A

Roof Pitch	Pitch Factor
10°	1.088
20°	1.182
30°	1.288
40°	1.419

Flow Capacity

In general terms the most efficient section of gutter runs from the outlet, for a distance of 50 times the maximum height of water the gutter can hold when level. In the case of Swish Round gutter this is approximately 2.4m (ie. 48mm x 50). The capacities shown for Swish gutter systems have been independently assessed on a flow rig in accordance with BS EN 12056:2000 and are based on the following:–

- A 'short' run of gutter (ie 50 x height of water the gutter is capable of containing).
- The gutter is set straight and level (ie a fall of up to 3mm/m).
- A storm event running at 75mm per hour per m^2 or 0.021 litres per second.
- Capacities are reduced by a 'safety factor' of 10%.

Table B

Short Gutter system	Flow litres* per second	Max. area drained m^2
Round	0.9	43
Square	1.6	76
Ogee	2.2	105
Deepflow	1.8	86

*Outlet positioned at end of run

System Layout

It is at once obvious from the flow capacity table that different gutter shapes have different flow and area drainage capabilities.

The roof area to be drained should be compared with the maximum area that a gutter type is able to drain (Table B: right column). If the figure in the table is too low the designer has the following options:

- Select a system with a higher capacity
- Increase the fall on the gutter. With a longer gutter this has its limitations, as water coming off the tiles is more likely to overshoot the gutter at the lower end. With a shallow fascia this may not even be an option. In addition the greater volume of water in a long gutter will tend to reduce the speed of flow.
- Move the outlet point to a central position to significantly increase the gutter drainage capacity.

For further guidance please consult Swish Technical Services.

Other Notes on Layout

- If an end outlet is located around a corner flow rates should be reduced by 15%.
- Larger valleys may require a dedicated outlet at the corner.
- Where the roof is likely to discharge water rapidly eg. long slopes or where low friction roof coverings are employed, a larger gutter may be required to avoid water overshooting the gutter.

Snow Loading

In locations where heavy snowfall is common, fixing centres for gutter brackets should be reduced to 600mm for all Swish systems.

In addition all fixing holes should be used on all brackets and the use of snowboards is recommended where appropriate.

For further advice on the specification and installation of Swish gutters please email:info@swishbp.co.uk or call 01827 317200

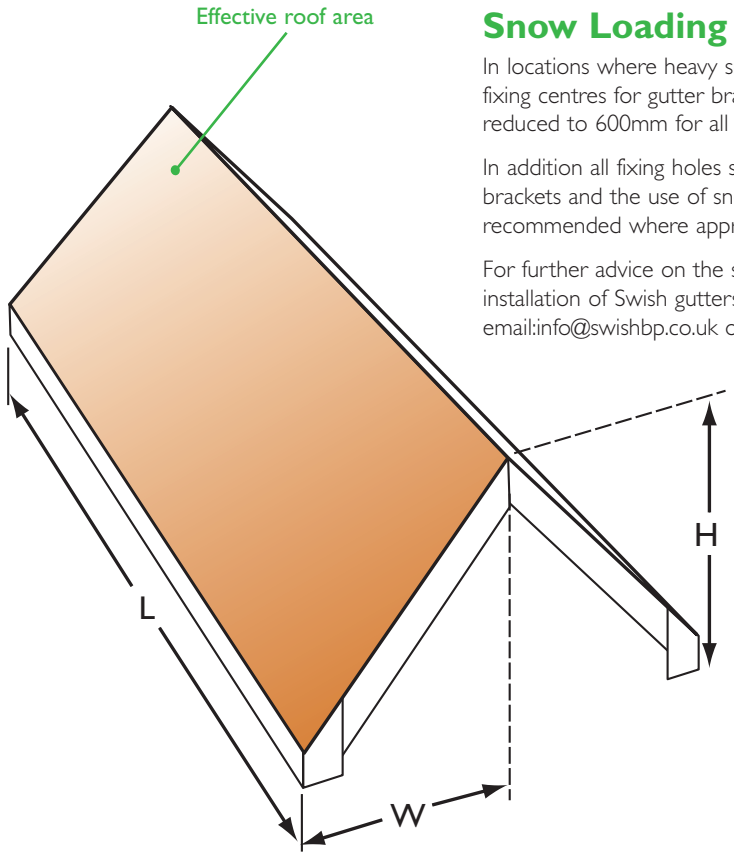

Half Round System

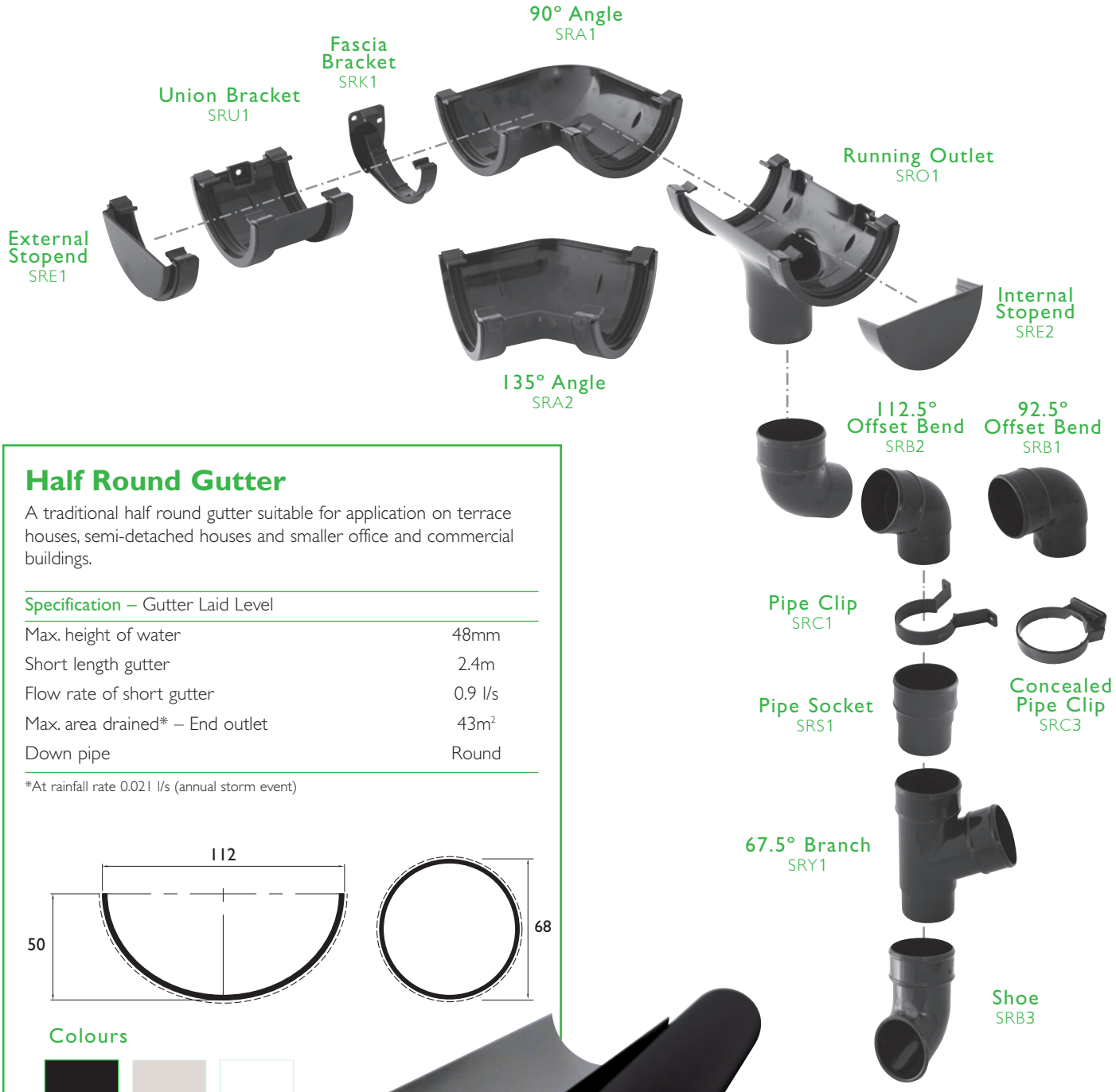

Half Round Gutter

A traditional half round gutter suitable for application on terrace houses, semi-detached houses and smaller office and commercial buildings.

Specification – Gutter Laid Level	
Max. height of water	48mm
Short length gutter	2.4m
Flow rate of short gutter	0.9 l/s
Max. area drained* – End outlet	43m²
Down pipe	Round

*At rainfall rate 0.021 l/s (annual storm event)

Colours

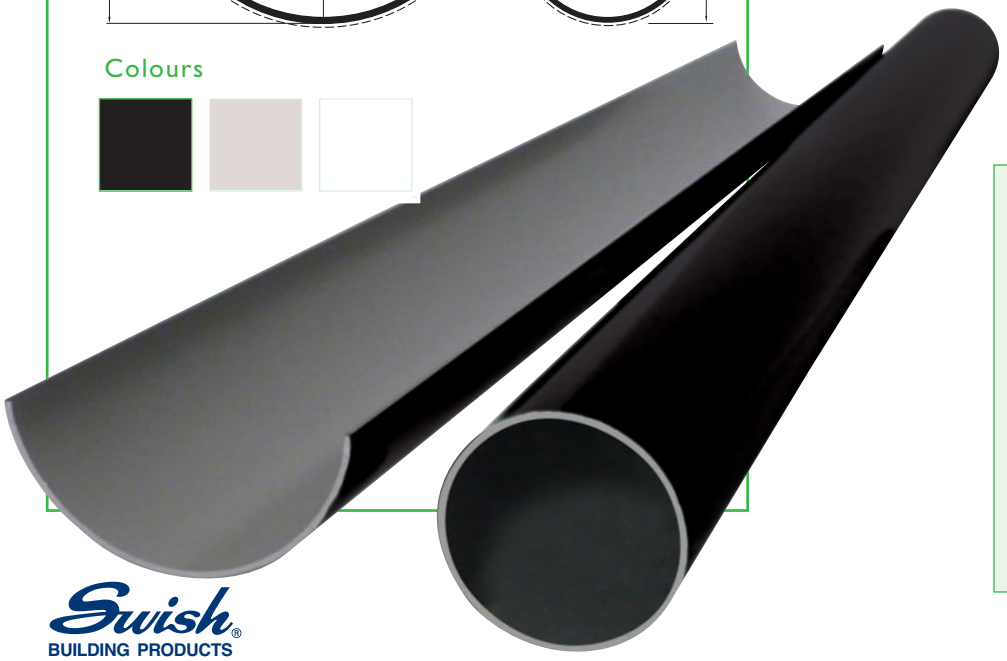

Accessories

Hopper for Square/Round
SRH1

Swish BUILDING PRODUCTS

Deepflow Gutter

A high capacity round system for larger houses and accomodation blocks. The higher flow rate is espcially suitable for draining larger roof areas.

Specification – Gutter Laid Level	
Max. height of water	68mm
Short length gutter	3.4m
Flow rate of short gutter	1.8 l/s
Max. area drained* – End outlet	86m²
Down pipe	Round

*At rainfall rate 0.021 l/s (annual storm event)

Colours

For further details contact:

Swish®
BUILDING PRODUCTS
Pioneer House, Mariner, Lichfield Road Industrial Estate, Tamworth,
Staffordshire B79 7TF
Telephone: (01827) 317200
Fax: (01827) 317201
e-mail: marketing@swishbp.co.uk
www.swishbp.co.uk

© Swish Building Products 12/14

A600