54 Common Lane
Titchfield, Hants,
PO14 4BU

07717 759149
www.aquacallidus.co.uk

12 March 2025

Terry Brennan
c/o Wessex Planning
Meadowsweet Cottage
Morleys Lane
Ampfield
Hants
SO51 9BJ

FAO Louise Cutts

Ref: 24067

Willowmead, Wildern Lane, Hedge End, Hants
Drainage Proposals

Dear Sirs

The site is located on Clay geology. Permeability testing was undertaken to establish if the soils were suitable for a soakaway. testing determined permeability of 1.9 x 10^{-6} m/sec (Vp=174 secs/mm) . A copy of the test results is attached. The soil permeability is very low and is not suitable for soakaway infiltration discharge as a half drain time of 24 hours is not possible.

Surface Water
It is proposed that the roofs will drain to the existing surface water drain network on the main site. This outfalls to the public surface water sewer network in the southwest corner of the property. The surface water drains in the existing property are shallow and a pump is required. Provision of a package pump station with minimum 1,100L storage and minimum pump rate of the 7 l/sec is required to drain the proposed development. It is necessary to limit the rate at which the flow enters the existing surface water network. Calculations are attached which demonstrate for a 2 l/sec flow restriction the 1%AEP + 45% climate change + 10% urban creep storm scenario requires 4.7m^3 of attenuation storage. It sir porose to provide this to the south of the existing property as 3.5 x 3.5 x 0.4m deep geocellular storage tank (4.7m^3 storage) with a 2.0 l/sec vortex flow control outfall to the existing site drainage. The calculations for this are attached.

The use comprises low risk surface water pollution hazards. The attached water quality assessment confirms the proposed drainage will provide sufficient treatment. A catch pit is specified upstream of the attenuation storage to intercept sediment.

The drainage will be of private status and should accord with building regulations standards. ICs are generally located within soft private landscape areas or pedestrian paths, and generic preformed PPICs complying with Building Regulations would be suitable given the private status of the network. The proposed drainage layout is shown on drawing ACC24067-01-A.

A SUDS O&M schedule is attached.

Foul Water
The existing Willowmead property is served by 150mm DN foul sewer connection from the south west corner of the property. Foul water from the proposed bungalows will drain by conventional gravity FW drain

network to a small package pump station with min 1,200L storage to pump treated effluent across to the existing foul drainage manhole in the south west corner of Willowmead.

Unless noted otherwise this is to be 100mm DN. ICs are generally located within soft private landscape areas or pedestrian paths, and generic preformed PPICs complying with Building Regulations would be suitable given the private status of the network. The construction and the drains and chambers shall be to Building Regulations standard specifications.

Yours Sincerely,

Aqua Callidus Consulting Ltd

Andy Traves

Enc. Permeability test results
ACC24067-01-A
Attenuation tank calculations
Water quality calculations
SUDS O&M
DET-0005
DET-0007
DET-0009
DET-0200
DET-0201
DET-0202
DET-0401

Aqua Callidus Consulting Ltd
52 Common Lane, Titchfield,
Hants, PO14 4BU

t: 07717 759149
www.aquacallidus.co.uk

Site Ref Willowmead **project** 24067

BS6297 Percolation Test

Hole Reference **TH01**

D1	0.4	m	Notes	
D2	0.3	m		by 0.3m (into page)
D3	0.15	m		
D4	0.3	m		

Notes on soil nature:

brown sandy silty clay

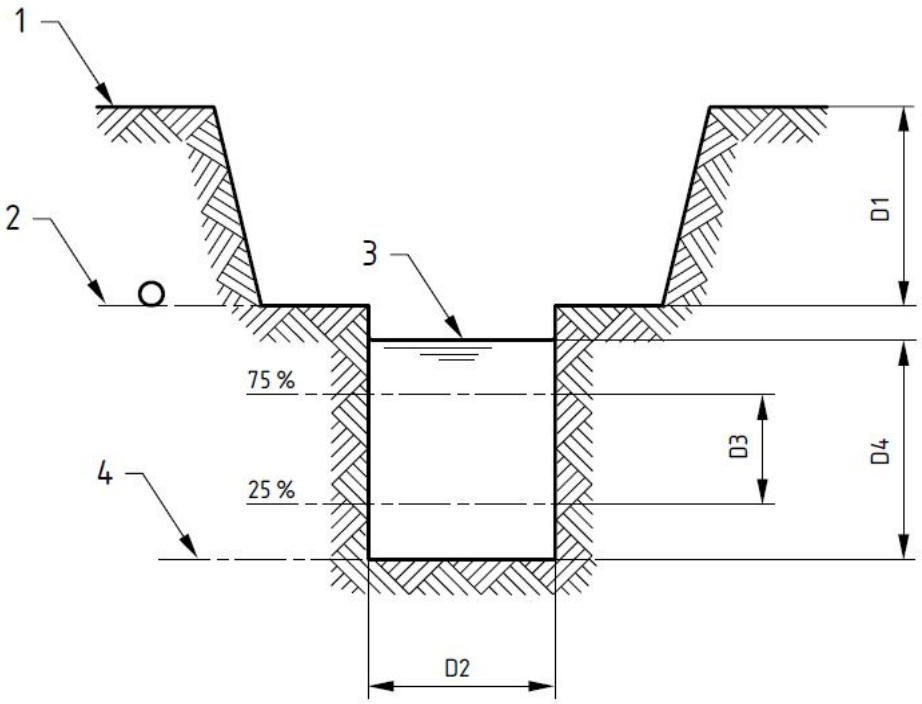

Results

Test No	Time to drop D3 (0.15m)			Total time	V_p	Notes
	hours	mins	secs	secs	secs/mm	
1	7	15	0	**26100**	174.0	
2				**0**	0.0	
3				**0**	0.0	
				AVERAGE	**174.0**	

If V_p greater than 100 a drainage mound may be necessary and where less than 12 a retarding sand blanket may be necessary.

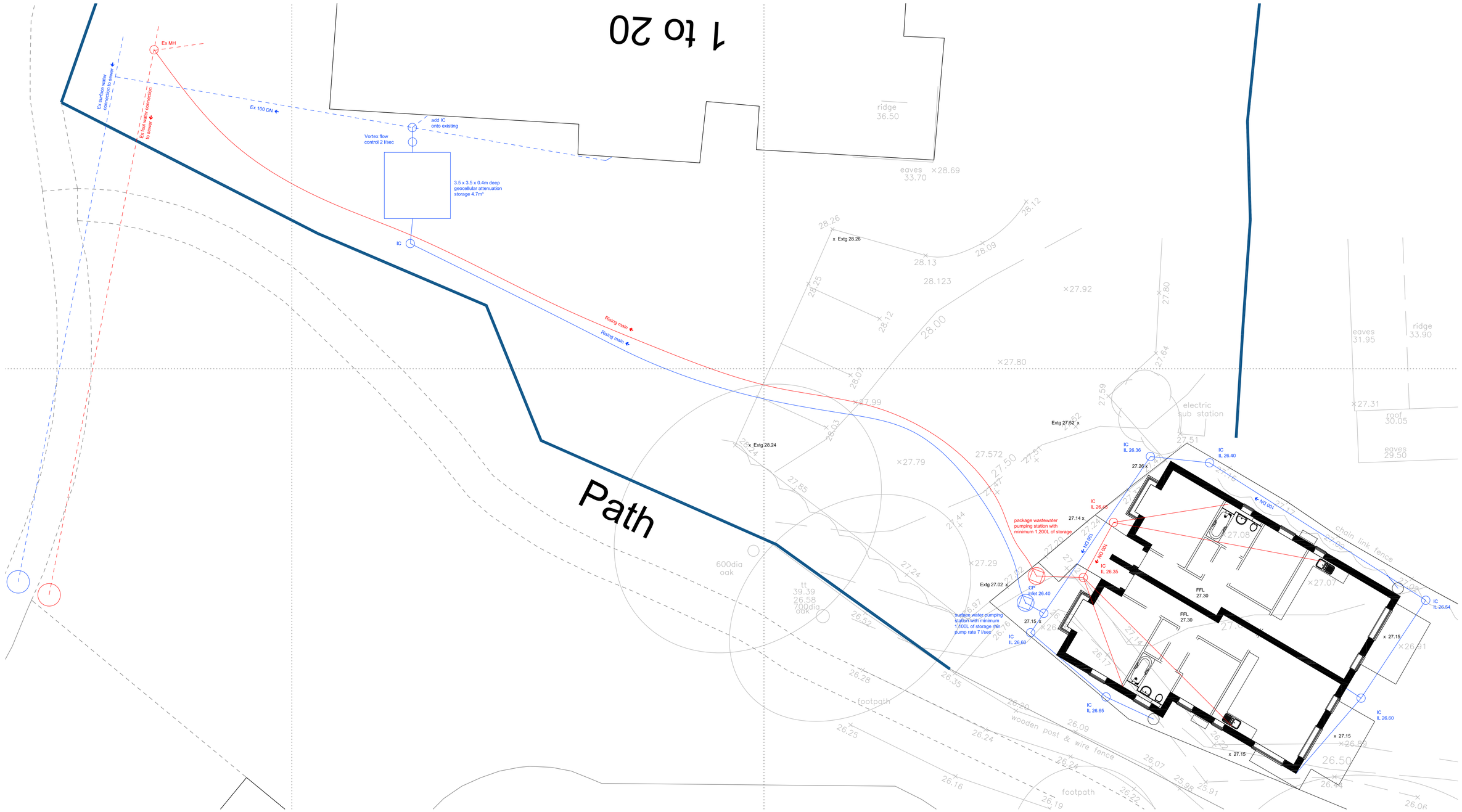

Rev.	Amendment	Date
A	site layout revised	12-03-2025

Original Sheet Size A1 (841 x 594)

0 10 mm 50

Aqua Callidus CONSULTING
54 Common Lane
Titchfield
Hants
PO14 4BU
07717 759149

Project
Bungalows at Willowmead
Wildern Lane
Hedge End

Subject
Drainage Layout

Scale	Project No.	Drawing No.	Sheet No.	Revision
1:100	24067	ACC-24067-01	na	A

Aqua Callidus Consulting Ltd
52 Common Lane
Titchfield, Hants,
PO14 4BU

t: 07717 759 149

www.aquacallidus.co.uk

Project No.: 24067
Project Title: Willowmead

Detention Assessment to CIRIA C753

No infiltration

Site Location: Hedge end
Catchment ID: gross

r =	0.36	*(range 0.12 to 0.45)*
Drained Area =	165	m^2
Design storm 1 in =	100	year
Runoff volume uplift =	45	% for climate change
	10	% for urban creep

C_v = 1.00

Technical Assessment

Base axis Length L_x =	3.50	m
Base axis Length L_y =	3.50	m
Discharge rate =	2.00	l/s
Storage depth =	0.400	m
storage porosity =	95	%

Base area = 12.3 m^2

storage volume = 4.7 m^3
Design volume = 4.7 m^3
M5-60 Rainfall = 20 mm

Storm Duration	**5 min**	**10 min**	**15 min**	**30 min**	**1 hr**	**2 hr**	**4 hr**	**6 hr**	**10 hr**	**24 hr**
(secs)	300	600	900	1800	3600	7200	14400	21600	36000	86400
r= 0.36 Value Z1	0.36	0.51	0.62	0.79	1.00	1.22	1.48	1.67	1.90	2.42
Rainfall M5 (mm)	7.2	10.2	12.4	15.8	20.0	24.4	29.6	33.4	38.0	48.4
M100/M5 gf Value Z2	1.84	1.91	1.95	2.00	2.03	2.01	1.97	1.94	1.91	1.82
Rainfall M100 (mm)	**13.3**	**19.5**	**24.2**	**31.5**	**40.6**	**49.1**	**58.4**	**64.9**	**72.4**	**88.2**
ith climate uplift (mm)	**19.2**	**28.3**	**35.0**	**45.7**	**58.9**	**71.2**	**84.7**	**94.1**	**105.0**	**127.9**
With urban creep (mm)	**21.2**	**31.1**	**38.5**	**50.3**	**64.8**	**78.3**	**93.2**	**103.5**	**115.5**	**140.7**
RUNOFF (m^3)	**3.5**	**5.1**	**6.4**	**8.3**	**10.7**	**12.9**	**15.4**	**17.1**	**19.1**	**23.2**
inflow rate (l/s)	11.6	8.6	7.1	4.6	3.0	1.8	1.1	0.8	0.5	0.3
storage rate (l/s)	9.6	6.6	5.1	2.6	1.0	0.0	0.0	0.0	0.0	0.0
Discharge (m^3)	**0.6**	**1.2**	**1.8**	**3.6**	**7.2**	**12.9**	**15.4**	**17.1**	**19.1**	**23.2**
Req'd STORAGE (m^3)	**2.9**	**3.9**	**4.6**	**4.7**	**3.5**	**0.0**	**0.0**	**0.0**	**0.0**	**0.0**
Residual drain time (h)	**0.4**	**0.5**	**0.6**	**0.7**	**0.5**	**0.0**	**0.0**	**0.0**	**0.0**	**0.0**

Aqua Callidus Consulting Ltd
52 Common Lane, Titchfield,
Hants, PO14 4BU

t: 07717 759149
www.aquacallidus.co.uk

Date: 20/08/2024

Site Ref Willowmead

SuDS Water Quality Management CIRIA C753 Ch26 **Simple Index Approach**

Catchment roof

Is discharge to: SPZ1? N Drinking Water Protection Area ? N

Is site in close proximity to an area with sensitive environmental designation? N

if so how close? m

Is an additional treatment component required due to sensitivity? Y

Land Use	Hazard	TSS index	Metals index	HydroCar index
roofs-residential	very low	0.2	0.2	0.05

**2 residential roofs remove gross solids and sediments*

Treatments

To surface water discharge Y

	Component	TSS MIndex	Metals MIndex	HydroCa MIndex	factor
1	catch pit & leaf guard	0.2	0.2	0.05	1.00
2	N/A	0	0	0	0.50
3	N/A	0	0	0	0.50
	mitigation index	**0.2**	**0.2**	**0.05**	
X1	N/A	0	0	0	1.00
	Enhanced mitigation index	**0.2**	**0.2**	**0.05**	
	Residual pollution index	**0**	**0**	**0**	

Land Use	Hazard	TSS index	Metals index	HydroCar index	*residual*
roofs-residential	very low	**0**	**0**	**0**	

**2 residential roofs remove gross solids and sediments*

Treatments

To groundwater discharge N

	Infiltration surface	TSS MIndex	Metals MIndex	HydroCa MIndex	factor
1	N/A	0	0	0	1.00
2	N/A	0	0	0	0.50
	Final residual pollution index	**0**	**0**	**0**	

Is a groundwater risk screening required? N

Notes:

SUDS operation and maintenance - general

There are three categories on maintenance activities:

Regular maintenance consists of basic tasks done on a frequent and predictable schedule, including vegetation management, litter and debris removal, and inspections.

Occasional maintenance comprises tasks that are likely to be required periodically, but on a much less frequent and predictable basis than the routine tasks (sediment removal is an example). The table below summarises the likely maintenance activities required for each SUDS component and specific maintenance activities is given in the following sections.

Remedial maintenance comprises intermittent tasks that may be required to rectify faults associated with the system. Where remedial work is found to be necessary, it is likely to be due to site-specific characteristics or unforeseen events, and as such timings are difficult to predict. Remedial maintenance items can comprise items such as:

- inlet/outlet repairs
- erosion repairs
- reinstatement or realignment of edgings, barriers, rip-rap or other erosion control
- infiltration surface rehabilitation
- replacement of blocked filter fabrics
- construction stage sediment removal (although this activity should have been undertaken before the maintenance contract)
- system rehabilitation immediately following a pollution event.

	SUDS component												
O&M activity	Pond	Wetland	Detention basin	Infiltration basin	Soakawayu	Infiltration trench	Filter trench	Modular storage	Pervios pavements	Swale/bioretention/greenroofs	Filter strip	Sand filter	Pre-treatment systems
Regular maintenance													
Inspection	■	■	■	■	■	■	■	■	■	■	■	■	■
Litter/debris removal	■	■	■	■	□	■	■	□	■	■	■	■	■
Grass cutting	■	■	■	■	□	■	■	□	□	■	■	□	□
Wee/invasive plant control	□	□	□	□		□	□		□	□	□	□	□
Shrub management	□	□	□	□					□	□	□		□
Shoreline vegetation management	■	■	□										□
Aquatic vegetation management	■	■	□										□
Occasional maintenance													
Sediment management *	■	■	■	■	■	■	■	■	■	■	■	■	■
Vegetation/plant replacement	□	□	□	□						□	□		□
Vacuum sweeping and brushing									■				
Remedial maintenance													
Structure rehabilitation/repair	□	□	□	□	□	□	□	□	□	□	□	□	□
Infiltration surface reconditioning				□	□	□	□		□	□	□	□	

■ will be required □ may be required * sediment to be collected upstream of the main device

GENERAL MAINTENANCE

Litter/debris removal

This is an integral part of SUDS maintenance and reduces the risks of inlet and outlet blockages, retains amenity value and minimises pollution risks. High litter removal frequencies may be required at high profile commercial/retail parks where aesthetics are a major driver.

Grass cutting

It is recommended that grass cutting be minimised around SUDS facilities, apart from swales and filter strips and structural embankments where a height of 100–150 mm is recommended to prevent the plants falling over, or "lodging", when water flows across the surface. In general, allowing grass to grow tends to enhance water quality performance. Short grass around a wet system such as pond or wetland provides an ideal habitat for nuisance species such as geese; allowing the grass to grow is an effective means of discouraging them. Grass around wet pond or wetland systems should not be cut to the edge of the permanent water. Grass cutting is an activity undertaken primarily to enhance the perceived aesthetics of the facility. The frequency of cutting will tend to depend on surrounding land uses, and public requirements. Therefore, grass cutting should be done as infrequently as possible, recognising the aesthetic concerns of local residents. However, grass around inlet and outlet infrastructure should be strimmed closely to reduce risks to system performance. If a manicured, parkland effect is required, then cutting will need to be undertaken more regularly than for meadow type grass areas, which aim to maximise habitat and biodiversity potential.

Weed/invasive plant control

Weeds are generally defined as vegetation types that are unwanted in a particular area. For SUDS, weeds are often alien or invasive species, which do not enhance the technical performance or aesthetic value of the system, or non-native species and the spread of which is undesirable. In some places, weeding has to be done by hand to prevent the destruction of surrounding vegetation (hand weeding should generally be required only during the first year, ie during plant establishment). However, over grassed surfaces, mowing can be an effective management measure. The use of herbicides and pesticides should be prohibited since they cause water quality deterioration. The use of fertilisers should also be limited or prohibited to minimise nutrient loadings which are damaging to water bodies.

Shrub management

Shrubs tend to be densely planted and are likely to require weeding at the base, especially during the first year to ensure that they get enough water. Shrubs should be selected so they can grow to their maximum natural height without pruning.

Aquatic/shoreline vegetation management

Aquatic plant aftercare in the first 1–3 years may be required to ensure establishment of planted vegetation and control nuisance weeds/invasive plants. Once established, the build-up of dead vegetation from previous seasons should be removed at convenient intervals to reduce organic silt accumulation (eg every three years and at the end of landscape contract periods).

Emergent vegetation may need to be harvested every 5–10 years to maintain flood attenuation volumes, optimise water quality treatment potential and ensure fresh growth, although this is often not required. Care should be taken to avoid nesting birds during the breeding season and to avoid great crested newt and water vole habitats. The typical window for this activity is towards the end of the growing season (September and October). As vegetation matures, plant height may also become a safety issue in residential areas.

Where emergent vegetation is managed, up to 25 per cent can be removed by cutting at 100 mm above soil level using shearing action machinery. Up to 25 per cent of submerged vegetation can be cut and raked out at any one time, using approved rakes, grabs or other techniques, depending on whether clay or waterproof membranes are present. Aquatic vegetation arisings should be stacked close to the water's edge for 48 hours to de-water and allow wildlife to return to the SUDS feature. They should then be removed to wildlife piles, compost heaps or off site before decomposition, rotting or damage to existing vegetation can occur.

Algae removal may be undertaken for aesthetic purposes during the first 3–5 years of a pond/wetland's life. The growth of algae, which is considered by some to be visually intrusive, is encouraged by nutrients introduced into the water body. This situation should settle down once upstream construction activities are complete.

Management of green waste
Appropriate methods should be implemented to dispose of green waste, including

- The development of wildlife piles
- On- or off-site composting
- Disposal to landfill

REMEDIAL MAINTENANCE

Structure rehabilitation/repair
There will come a time with most SUDS techniques when a major overhaul of the system is required to remove clogged filters, geotextiles, gravel etc. This will typically be between 10 and 25 years, depending on the technique and factors such as the type of catchment and sediment load. For example the use of geotextiles close to the surface in pervious surfaces traps the majority of sediment in a relatively easily accessible location. Reconstruction of the surface layer and bedding layer is all that is required, rather than reconstruction of the whole pavement depth.

Major overhaul is most likely to be required on techniques that rely on filtration through soils or aggregates, such as sand filters and infiltration devices. Other SUDS techniques are unlikely to need major overhaul if routine maintenance is undertaken as required (for example ponds and wetlands).

Rehabilitation activities for each SUDS component are described on the following tables.

Infiltration surface rehabilitation
In the event that grassed surface permeability has reduced, there are a number of landscape techniques that can be used to open the surface to encourage infiltration. Such activities are not commonplace and are likely to be required only in circumstances where silt has not been effectively managed upstream.

1. Scarifying to remove "thatch". Thatch is a tightly intermingled organic layer of dead and living shoots, stems and roots, developing between the zone of green vegetation and the soil surface. Scarifying with tractor-drawn or self-propelled equipment to a depth of at least 50 mm breaks up silt deposits, removes dead grass and other organic matter and relieves compaction of the soil surface.
2. Spiking or tining the soil, using aerating equipment to encourage water percolation. This is particularly effective if followed by top dressing with a medium to fine sand, and is best undertaken when the soil is moist. Spiking or tining with tractor drawn or self-propelled equipment penetrates and perforates soil layers to a depth of at least 100 mm (at 100 mm centres) and allows the entry of air, water, nutrients and top dressing materials.
3. As a last resort, it may be necessary to remove and replace the grass and topsoil by:
    - removing accumulated silt and (subject to a toxicity test) applying to land or dispose of to landfill
    - removing damaged turf which should be composted
    - cultivating remaining topsoil to required levels
    - re turfing (using turf of a quality and appearance to match existing) or reseeding (to BS 7370: Part 3, Clause 12.6 (BSI, 1991) using seed to match existing turf) area to required levels. It may be necessary to supply and fix fully biodegradable coir blanket to protect seeded soil. Turf and seeded areas should be top dressed with fine sieved topsoil to BS 3882 (BSI, 1994) to achieve final design levels. Watering will be required to promote successful germination and/or establishment.

Water butts operation and maintenance

Maintenance schedule	Required action	Frequency
Regular maintenance	Cleaning of tank, inlets, outlets, gutters, withdrawal devices and roof drain filters of silts and other debris..	Annually (or following poor performance).
Occasional maintenance	Replacement of any filters.	As required
Remedial actions	Repair of erosion damage, or damage to tank.	As required
Monitoring	Inspection of the tank for debris and sediment build up.	Annually (or following poor performance).
	Inspection of inlets, outlets and withdrawal devices.	Annually (or following poor performance).
	Inspection of areas receiving overflow, for evidence of erosion.	After extreme storms.
	Inspection of roof drain filters	Annually (or following poor performance).

Modular systems operation and maintenance

Maintenance schedule	Required action	Frequency
Regular maintenance	Inspect and identify any areas that are not operating correctly. If required, take remedial action.	Monthly for 3 months, then six monthly
	Debris removal from catchment surface (where may cause risks to performance)	Monthly
	Where rainfall infiltrates into blocks from above, check surface of filter for blockage by silt, algae or other matter. Remove and replace surface infiltration medium as necessary.	Monthly (and after large storms)
	Remove sediment from pre-treatment structures	Annually, or as required
Occasional maintenance	-	-
Remedial actions	Repair/rehabilitation of inlets, outlet , overflows and vents	As required
Monitoring	Inspect/check all inlets, outlets, vents and overflows to ensure that they are in good condition and operating as designed	Annually and after large storms

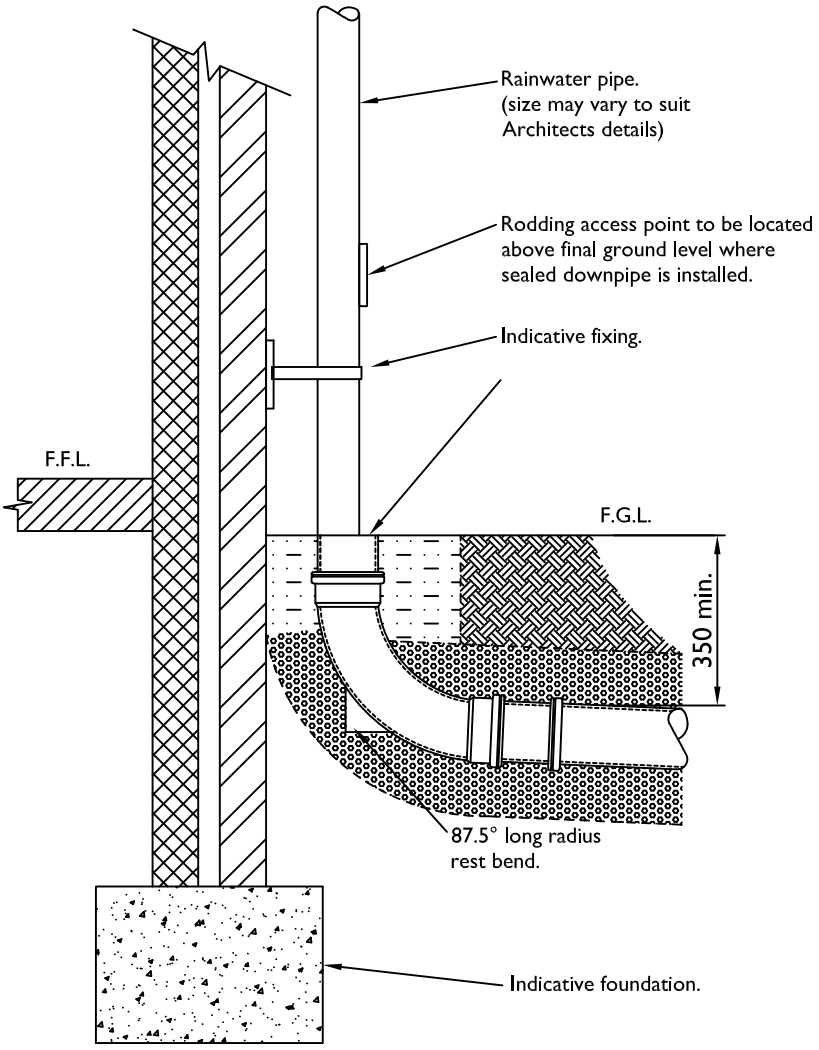

DETAIL OF RAINWATER PIPE

(Scale 1:20)

Original Sheet Size A4 (297 x 210)

0 10 mm 50

Aqua Callidus CONSULTING

52 Common Lane
Titchfield
Hants
PO14 4BU

07717 759149

Project

Subject

RWP connection

Scale	Project No.	Drawing No.	Sheet No.	Revision
As stated		DET-0005	na	-

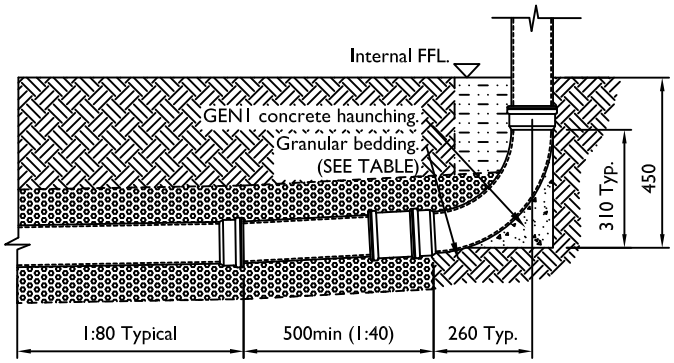

DETAIL OF FOUL REST BEND

(Scale 1:20)

Original Sheet Size A4 (297 x 210)

0 10 mm 50

52 Common Lane
Titchfield
Hants
PO14 4BU

07717 759149

Project

Subject

Foul rest bend

Scale	Project No.	Drawing No.	Sheet No.	Revision
As stated		DET-0007	na	-

Arched or lintelled opening to give 50mm min clearance all around the pipe.

Mask opening both sides with rigid sheet material to prevent overspill of fill or entry for vermin.

Pipe to be laid through foundation at 1:80 slope min to ensure self cleansing velocity is maintained in the unlikely event of settlement.

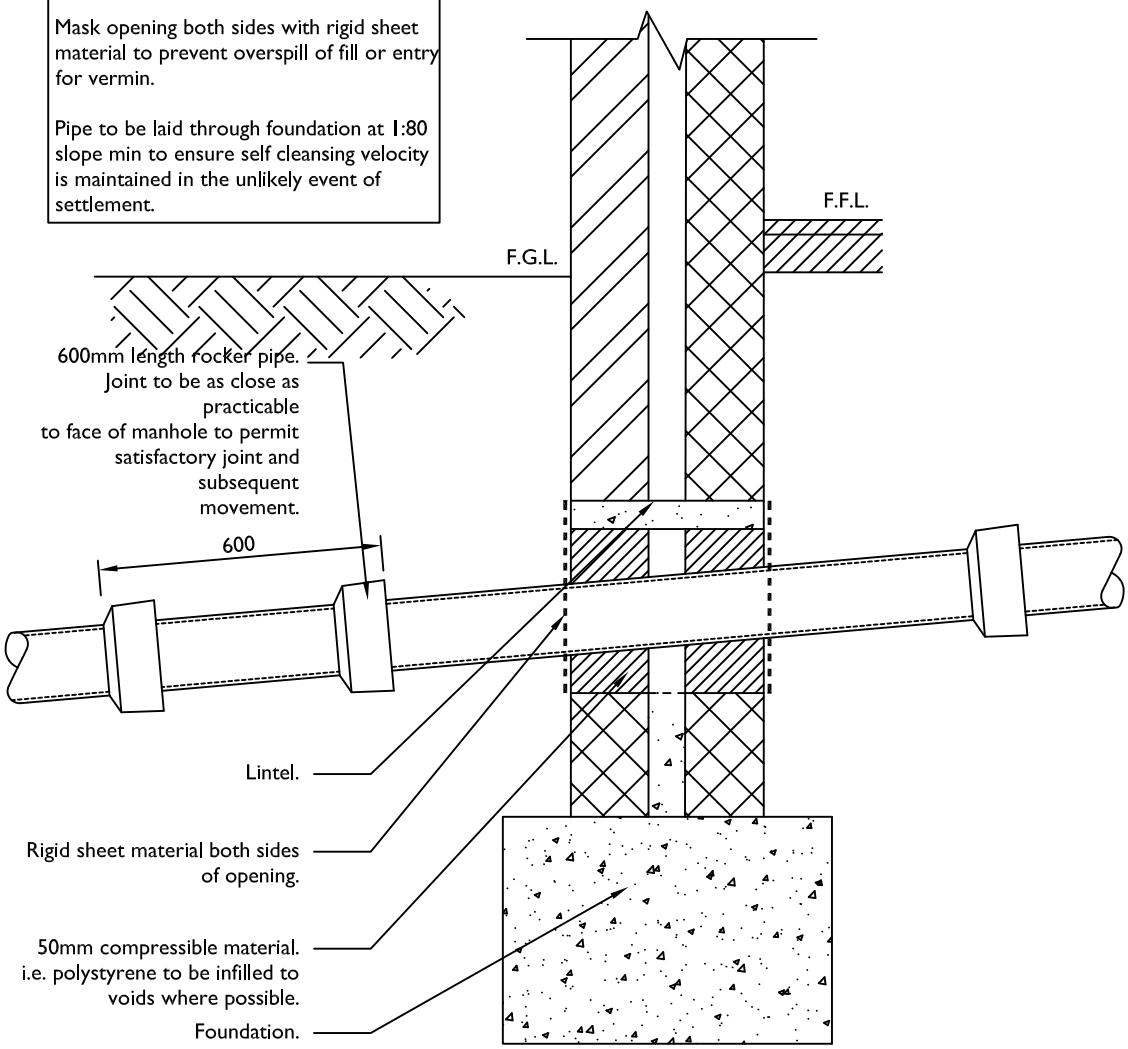

TYPICAL SECTION DETAILING PIPE 'SLEEVE' THROUGH LINTEL OPENING

(Scale 1:20)

Original Sheet Size A4 (297 x 210)

0 10 mm 50

Aqua Callidus CONSULTING

52 Common Lane
Titchfield
Hants
PO14 4BU

07717 759149

Project

Subject

Foundation Lintel

Scale	Project No.	Drawing No.	Sheet No.	Revision
As stated		DET-0009	na	-

TABLE (i)

Diameter of largest pipe in manhole (mm)	Internal diameter of manhole (mm)
Less than 375	1200 (1050 where depth to soffit is 1.35m to 1.5m)
375 - 700	1500
750- 900	1800
Greater than 900	Consult Undertaker/Engineer's Specification

TABLE (ii)

Pipe Diameter (mm)	Rocker Pipe Length (mm)
150 - 600	600
601- 750	1000
> 750	1250

TABLE (iii)

MH Location	Cover Grade	Test Load
Non-traffiked/ Pedestrian areas	A15	15
Private drives	B125	125
Parking courts	C250	250
Carriageway	D400	400
Airfields/Dockyards	E600	600
Airfields/Dockyards	F900	900

TABLE (iv)

NRSWA Road Category	Description	Minimum Frame Depth (mm)
I	Trunk roads and dual carriageways	150
II	All other 'A' roads	150
III	Bus Services	150
IV	All other roads except residential cul-de-sacs	150
	Residential cul-de-sacs	100

STEP IRONS (v)

1. Steps for manholes and other chambers shall be Type D Class 1, complying with the requirements of BS EN 13101: 2002.
2. Precast concrete manhole pattern step irons at 300mm centres vertically and staggered 300mm horizontally between centres.
3. Unprotected aluminium steps should not be permitted for adoptable applications.
4. Plastic encapsulated stepsare subject to undertaker's requirements/approval.

LADDERS (vi)

1. Mild steel ladders for vertical fixing shall comply with the relevant provision of BS 4211, class A and PD 970.
2. After fabrication, mild steel ladders shall be hot dip galvanised in accordance with BS EN ISO 1461:2009.
3. Stainless steel ladders for vertical fixing shall be fabricated from Grade 316S31 steel complying with BS 970: Part 1 and BS EN 10084, 10085, 10087, 10095, 10250, 10029, 10048, 10051, 10258, 10259.
4. GRP ladders shall be manufactured to the relevant requirements of BS EN 131, and from glass-reinforced polyester using an appropriate resin for the ladder location. Undirectional reinforcement shall be provided in the GRP matrix to maximise the strength of the product.

HIGH STRENGTH TOPPING (vii)

1. High-strength concrete topping shall be produced, laid and finished in accordance with the relevant provisions of BS 8204: Part 2 and the following approximate proportions by weight shall be used: 1 part cement, 1 part natural sand and 2 parts single sized coarse aggregate.

RECESSED COVERS (viii)

1. Where inspection chamber is located in areas of block paving it shall be fitted with a recessed cover to accommodate paving blocks.

PRE-CAST CONCRETE PRODUCTS (x)

1. Products shall comply with the relevant provisions of BS 5911: Part 2, 200 & 230.

MANHOLE COVERS & FRAMES (ix)

1. Manhole cover and frames shall comply with the relevant provisions of BS EN 124, BS 7903 and Highway Agency Guidance Document HA 104/02. They shall be of a non-rocking design which does not rely on the use of cushion inserts.
2. All manhole covers shall be the non-ventilating type and shall have closed keyways.
3. Refer to TABLE (iv) for frame depths.
4. Refer to Manhole Schedule/Drainage Drawing for cover grades.

Original Sheet Size A4 (297 x 210)

0 10 mm 50

Project

Aqua Callidus CONSULTING
52 Common Lane
Titchfield
Hants
PO14 4BU
07717 759149

Subject

Manhole and chamber notes

Scale	Project No.	Drawing No.	Sheet No.	Revision
As stated		DET-0200	na	-

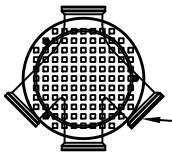

Inlets that are not required are to be blanked with stoppers.

PLAN

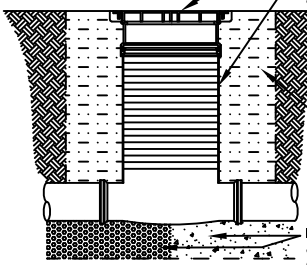

Cover and frame minimum clear opening. (SEE NOTE (ix)

Shaft cut to size and chamfered to 15°.

150mm thick suitable as dug or granular material.

100mm bed of selected as-dug material (well compacted) or granular material or 150 mm of GEN3 concrete. If concrete is used place chamber in position whilst concrete is wet in order that it takes the shape of the chamber base.

SECTION

POLYPROPYLENE SHALLOW INSPECTION CHAMBER DETAIL (250Ø)

(Scale 1:20)

Depth to invert of less than 600mm.

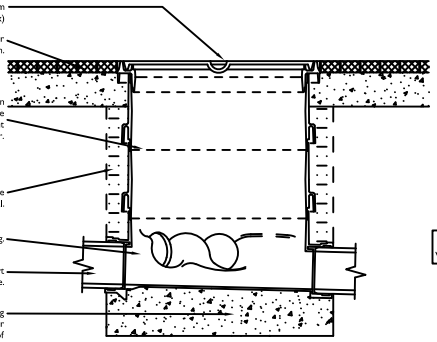

Cover and frame minimum clear opening. (SEE NOTE (ix)

Concrete flags or other finish.

480Ø Polypropylene Inspection chamber code supersleve PPIC100/150 or equivalent approved by the engineer.

150mm thick suitable as dug or granular material.

Preformed benching.

0.6m short rocker pipe.

100mm bed of selected as-dug material (well compacted) or granular material or 150 mm of GEN3 concrete. If concrete is used place chamber in position whilst concrete is wet in order that it takes the shape of the chamber base.

SECTION

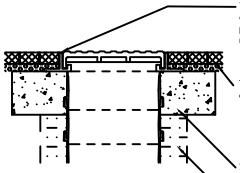

Where blocks are butted against cover they shall be bedded with polymer modified mortar. Ronafix mix C or equivalent.

Typical concrete block construction.

225mm (min.) Concrete collar.

150mm of selected as-dug material (well compacted).

Detail of cover where used under areas accessible to wheeled vehicles with wheel load in excess of 1.5 tonnes.

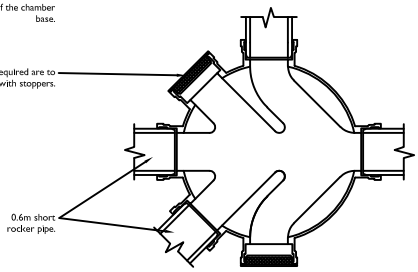

Inlets not required are to be blanked with stoppers.

0.6m short rocker pipe.

PLAN OF PPIC100

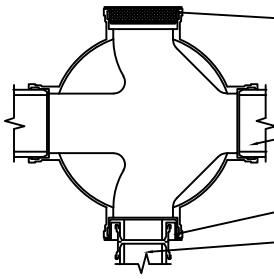

Inlets not required are to be blanked with stoppers.

0.6m short rocker pipe.

Adapter for DN100.

0.6m short rocker pipe.

PLAN OF PPIC150

POLYPROPYLENE INSPECTION CHAMBER DETAIL (480Ø)

(Scale 1:10)

Depth to invert of less than 930mm.
Depth to invert with concrete collar of less than 1.0m.

Original Sheet Size A4 (297 x 210)

0 10 mm 50

Aqua Callidus CONSULTING

52 Common Lane
Titchfield
Hants
PO14 4BU

07717 759149

Project

Subject

PPIC
250mm & 480mm DN

Scale	Project No.	Drawing No.	Sheet No.	Revision
As stated		DET-0201	na	-

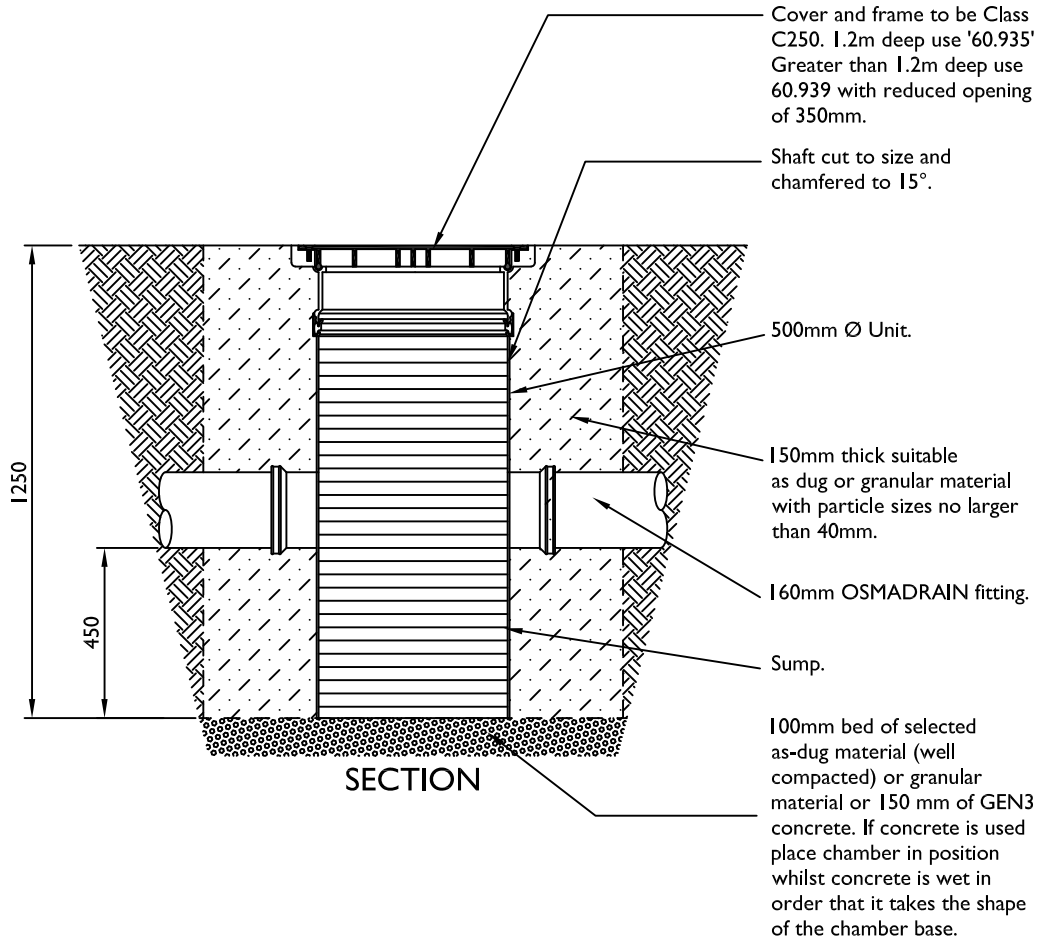

POLYPROPYLENE SHALLOW SILT TRAP DETAIL (500Ø)

(Scale 1:20)

Depth to invert 1.25m (standard unit)
Silt Traps installed greater than single unit depth to be extended using Wavin inspection chamber shaft units.

Original Sheet Size A4 (297 x 210)

0 10 mm 50

Aqua Callidus CONSULTING
52 Common Lane
Titchfield
Hants
PO14 4BU
07717 759149

Project

Subject

Polypropylene Catch Pit 500mm DN

Scale	Project No.	Drawing No.	Sheet No.	Revision
As stated		DET-0202	na	-

(*) Minimum cover requirements:
UNTRAFFICKED = 500mm
TRAFFICKED = 700mm

Installations requiring reductions on these figures will require further assessment for protection by Engineer prior to installation.

Pre-formed sockets on the Aquacells take a 160mm Ø pipe. An Osmadrain reducer is required for smaller pipes

Surface course: 150mm imported topsoil to BS 3882.

Sub-base course: 150mm (min) layer of selected clean excavated soil or sub-soil. (Well compacted)

Geotextile/Membrane: Imermeable membrane 1mm polyproplene heat sealed geomembrane

Laying course: 100mm coarse sand or non angular granular material base and surround.

Storage: Aquacell Blocks (Refer to Plan & Sections for arrangement)

Laying course: 100mm coarse sand or non angular granular material base and surround.

Geotextile/Membrane: Imermeable membrane 1mm polyproplene heat sealed geomembrane

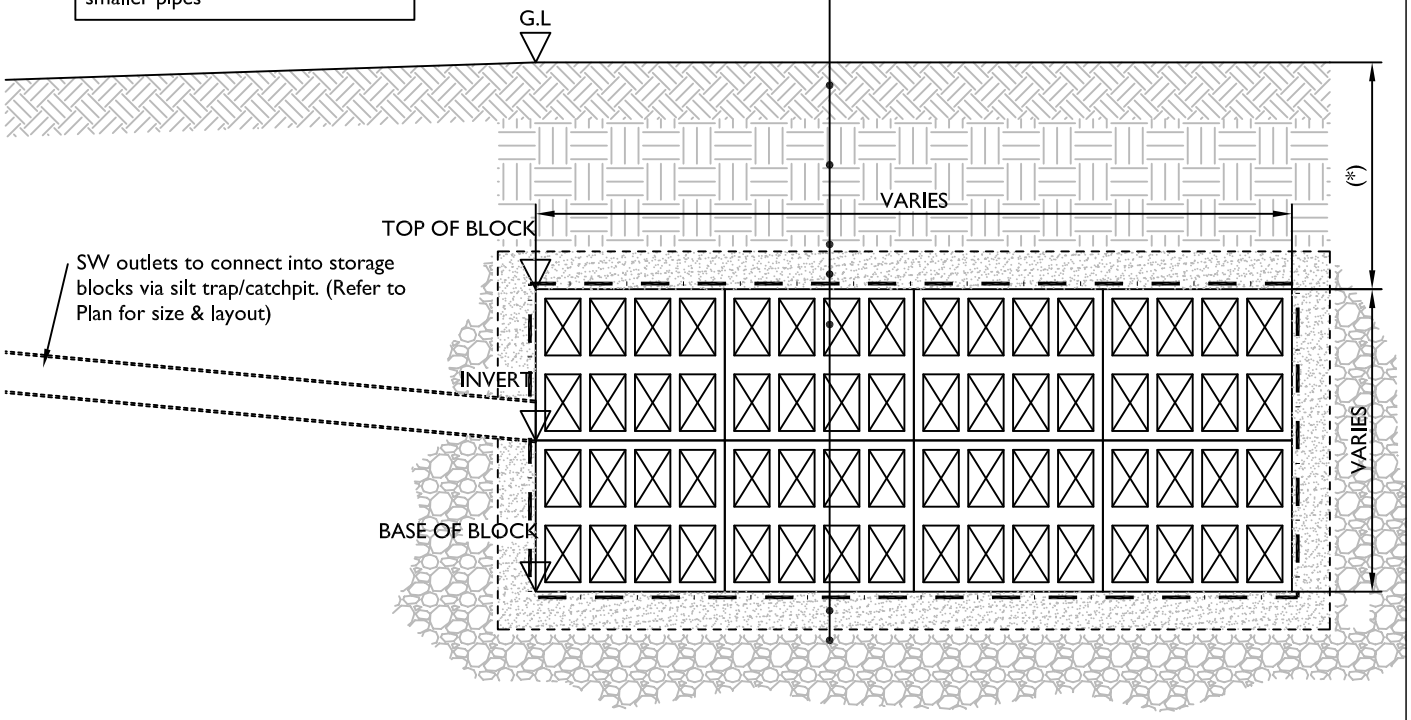

TYPICAL AQUACELL INSTALLATION (ATTENUATION METHOD)

(Scale 1:20)

Geolcellular module geomtery varies between suppliers.
If located under trafficked areas the appropriate module grades and minimum cover depths shall accord with manufactuers requirements
If located under trafficked areas the overlying pavement construction shall be to the pavement construction details shown elsewhere

Original Sheet Size A4 (297 x 210)

0 10 mm 50

Project

Aqua Callidus CONSULTING

52 Common Lane
Titchfield
Hants
PO14 4BU

07717 759149

Subject

Geocellular attenuation tank

Scale	Project No.	Drawing No.	Sheet No.	Revision
As stated		DET-0401	na	-