MADE IN BRITAIN

plaswood®

Recycled Plastic Products

Boardwalk, Decking & Fencing Installation Guide

Sustainable
Non Staining
Recyclable*
Long Lasting
UV Stable**
Maintenance Free
Durable
Weather Proof
Versatile
High Strength

Our Ethos

Environmental stewardship is at the heart of everything we do.

Our responsibility extends far beyond a hope for a cleaner environment. We are striving for a world where recycled plastic has endless possibilities.

Sustainability underpins our product designs and the way we run our recycling and remanufacturing operations.

*As part of our commitment to manage the resources that we use in our production, Plaswood operate a TAKE BACK SCHEME on our products that have served their useful life. All eligible products are capable of being returned to our recycling facilities and be re-used into new Plaswood products to be enjoyed by future generations. T&C's apply, for more details please contact Plaswoodsales@rpc-bpi.com

**Dark colours only

What we do

Plaswood offers a high quality, innovative, durable range of recycled plastic products and solutions that are made from recycled plastic and are recyclable*.

Innovation

We are proud of our continuous investments in innovation and in people which enables delivery of a competitive product and sustainable growth.

Sustainability

Our recycling processes are transforming waste into new supplies and solutions making the planet safer, greener, and better for future generations.

Quality

Plaswood products and raw materials are tested by independent experts, because we understand that performance and consistency are fundamental to our customers.

Features

Unlike wood or steel, Plaswood is impervious to all weather conditions, it is rot resistant, splinter free, moisture repellent and maintenance free.

The Circular Economy

Our process engineers are continuously working on developing sustainable, efficient recycling and re-manufacturing processes that support and develop the circular economy.

Visit us at **www.plaswood.eco** or call us on **+44 (0) 333 202 6800**

Plaswood recycling and remanufacturing process

All Plaswood products are manufactured from recycled plastic and are recyclable*

Therefore when you are ready for something new Plaswood can be re-recycled and remanufactured into third, fourth, fifth... life product.
Our customers can enjoy our product range for years to come, knowing that it is kind to our environment.

*As part of our commitment to manage the resources that we use in our production, Plaswood operate a **TAKE BACK SCHEME** on our products that have served their useful life. All eligible products are capable of being returned to our recycling facilities and be re-used into new Plaswood products to be enjoyed by future generations. T&C's apply, for more details please contact Plaswoodsales@rpc-bpi.com

1. It all starts here at Dumfries when the plastic waste arrives at our recycling and remanufacturing plant

2. Prior to the recycling process the material is quality checked

3. All plastics are shredded

4. To remove all contaminants and odour the shredded material is washed*
   * The water we use is being treated and re-used, when compared to production of virgin plastic this remanufacturing process reduces water usage by a whopping 90%.

5. Clean flake/crumb is dried and quality checked

6. Once our experts are satisfied with the quality of the raw material it is melted and ready to be blended

7. The blend composition is critical to the technical properties of our product, which is why we choose our blend ingredients (raw materials) very carefully

8. The blend mix is quality checked

9. Molten plastic material is extruded into recycled plastic lumber profiles – Plaswood

10. The extruded Plaswood will rest and cool for a period of time depending on profile size

11. Cooled profiles are exposed to rigorous quality control and technical tests to ensure they meet our quality standards

12. Subject to passing quality control, the profiles are ready to use

13. Plaswood profiles are ideal for fencing, decking, furniture, raised beds, planters, boardwalks, revetment walls and more...

Plaswood
Features & Benefits

Kind to our environment...

- Maintenance Free
- Durable
- Weather Proof
- Versatile
- High Strength
- Sustainable
- Non Staining
- Recyclable*
- Long Lasting
- UV Stable**

*As part of our commitment to manage the resources that we use in our production, Plaswood operate a TAKE BACK SCHEME on our products that have served their useful life. All eligible products are capable of being returned to our recycling facilities and be re-used into new Plaswood products to be enjoyed by future generations. T&C's apply, for more details please contact Plaswoodsales@rpc-bpi.com

**Dark colours only

Recycled Plastic Boardwalk

get on board with our recycled plastic boardwalks

Home | Horticulture | Road/Highways | Education | Docks/Marinas | Agriculture | Events | Building Material

Boardwalk

with handrails

Available in the following colours:

The structure with handrails was developed for public open spaces where safety, robust framework and durability are essential. This design principle can be applied across wider and narrower spans, with a wheelchair passing area option also available. This design is successfully used in coastal and forest paths, moor or fishing platforms.

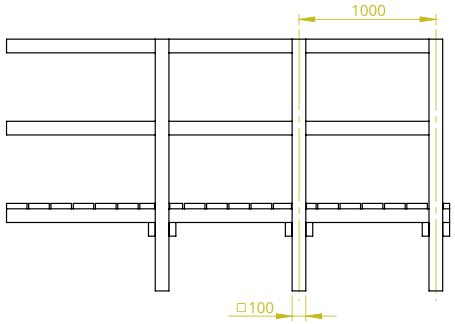

SIDE VIEW

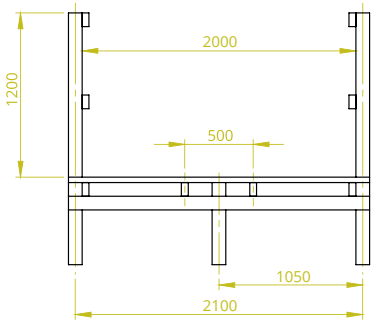

FRONT VIEW

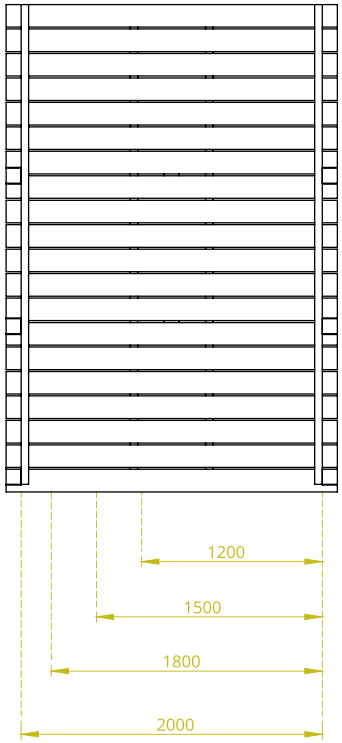

Available in four different widths

Quantities by Width - Per 3m

Component	Description	1200mm	1500mm	1800mm	2000mm
Handrail Posts	100mm x 100mm x Height*	6	6	6	6
Support Posts	100mm x 100mm x Height*	3	3	6	9
Bearers	50mm x 120mm x Width*	6	6	6	6
Joists	50mm x 120mm x 3000mm	4	4	6	6
Decking Boards	40mm x 150mm x Width*	20	20	20	10
Kickboards/ Edging	50mm x 50mm x 3000mm	2	2	2	2
Hand Rails	50mm x 100mm x 3000mm	4	4	4	4

*Customer to specify

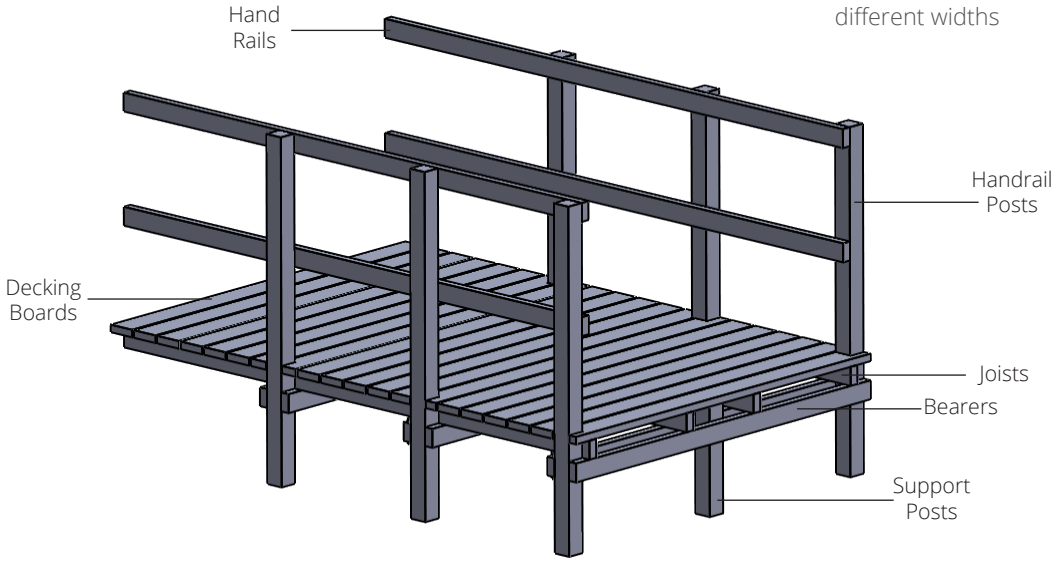

Boardwalk

without handrails

Available in the following colours:

This simple design focuses on a robust and functional structure. With no handrails it is a comparatively lower cost option that will offer a durable solution for fishing pegs, cycle paths, piers and floating docks.

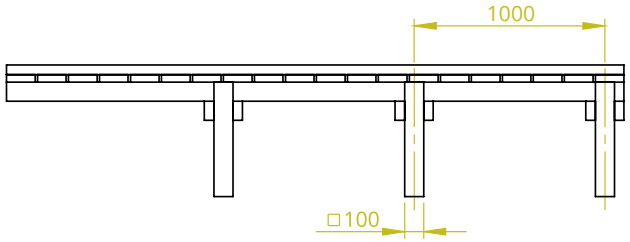

SIDE VIEW

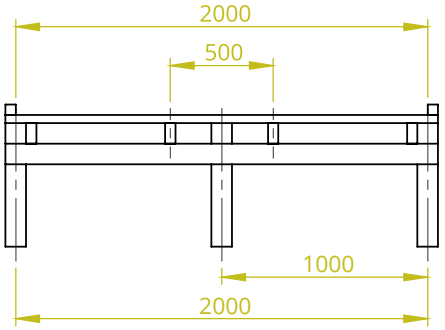

FRONT VIEW

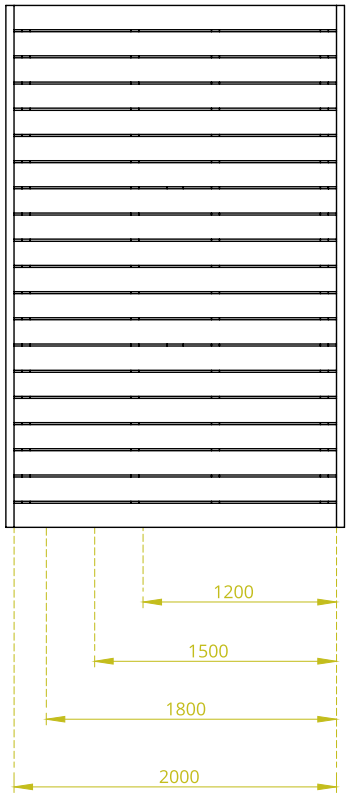

Available in four different widths

Quantities by Width - Per 3m

Component	Description	1200mm	1500mm	1800mm	2000mm
Posts/Up-rights	100mm x 100mm x Height*	6	9	12	12
Bearers	50mm x 120mm x Width*	6	6	6	6
Joists	50mm x 120mm x 3000mm	4	4	6	6
Decking Boards	40mm x 150mm x Width*	20	20	20	10
Kickboards/ Edging	50mm x 50mm x 3000mm	2	2	2	2

*Customer to specify

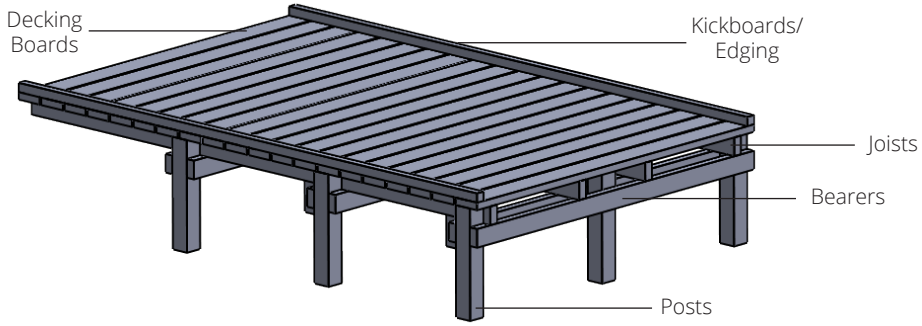

Boardwalk

roll-out

Available in the following colours:

This innovative design can be rolled out like a carpet and used as a temporary or permanent fixture. This product does not require mounting, screws or bolts, its flexibility makes it an ideal solution for soft grounds such as beach or meadow making it a hassle free alternative for festival pathways, beach cafes and domestic gardens.

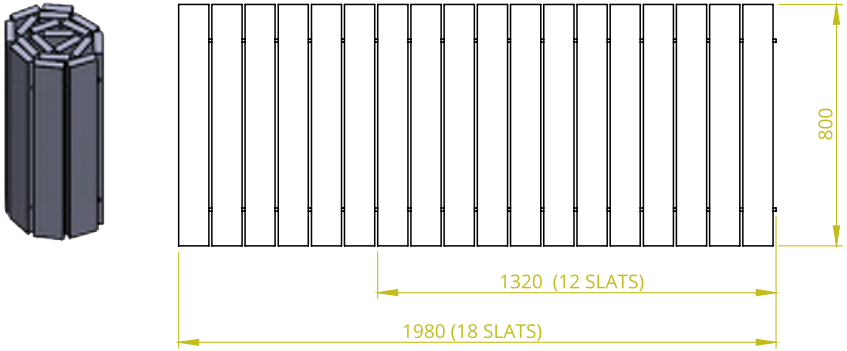

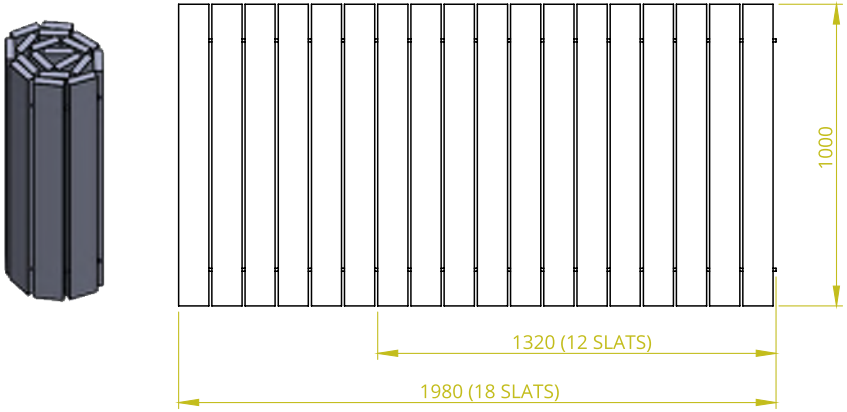

Component	Description	Dimension	Quantities per Unit
Lumber	30mm x 100mm x 800mm	800mm W x 1320mm L	12
Lumber	30mm x 100mm x 800mm	800mm W x 1980mm L	18
Decking	30mm x 100mm x 1000mm	1000mm W x 1320mm L	12
Decking	30mm x 100mm x 1000mm	1000mm W x 1980mm L	18

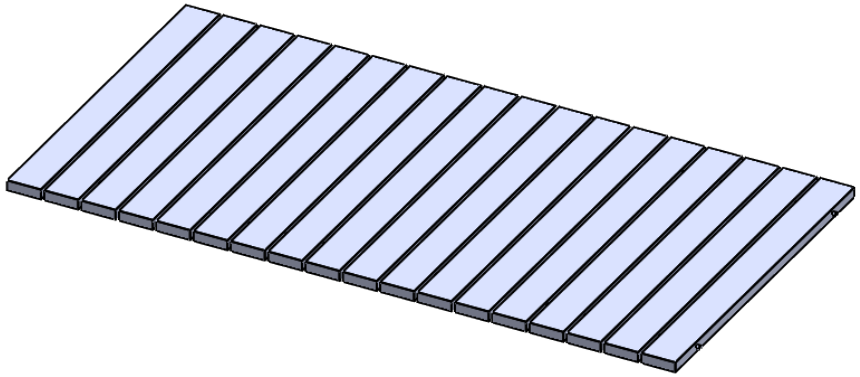

Boardwalk

pre-fabricated

Available in the following colours:

This ingenious design will save you time, the new preassembled alternative to standard boardwalk is as easy and quick to install as it is to take it apart. It makes it a logical option for temporary use without compromising on strength and durability required if used as a permanent application.

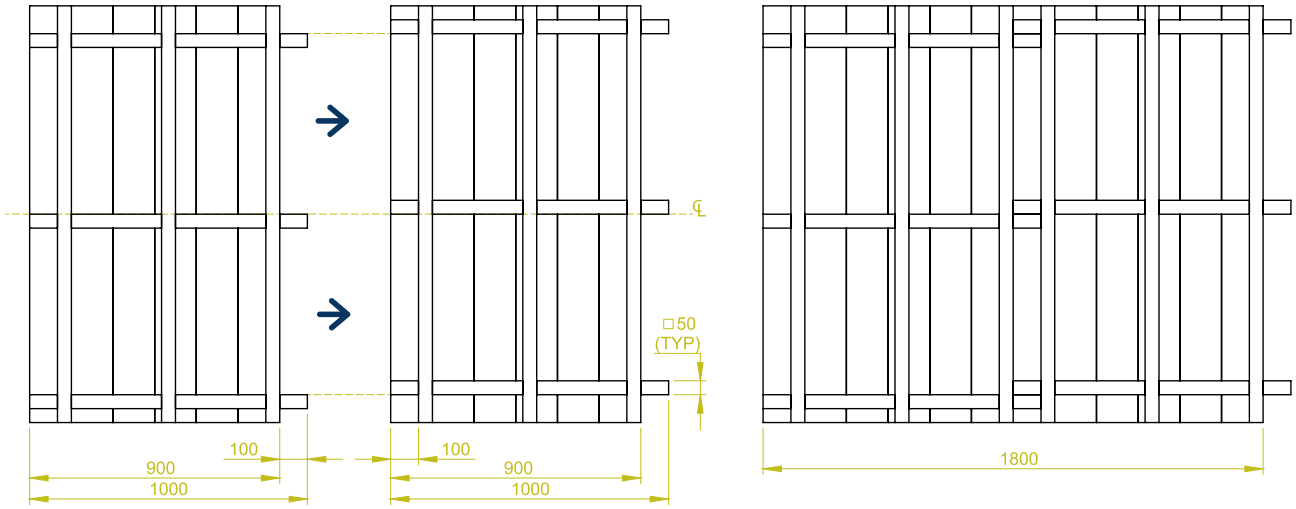

Component	Description	Dimension	Quantities per Unit
Joists (Vertical)	50mm x 50mm x 1000mm	1000mm W x 900mm L	3
Joists (Width)	50mm x 50mm x 1000mm		3
Decking	30mm x 150mm x 1000mm		6
Joists (Vertical)	50mm x 50mm x 1000mm	1200mm W x 900mm L	3
Joists (Width)	50mm x 50mm x 1200mm		3
Decking	30mm x 150mm x 1200mm		6
Joists (Vertical)	50mm x 50mm x 1050mm	1500mm W x 900mm L	3
Joists (Width)	50mm x 50mm x 1500mm		3
Decking	30mm x 150mm x 1500mm		6

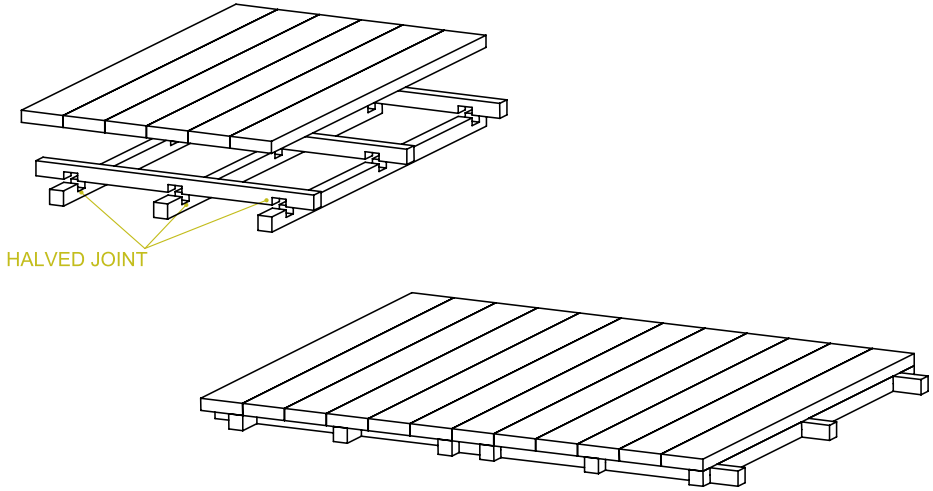

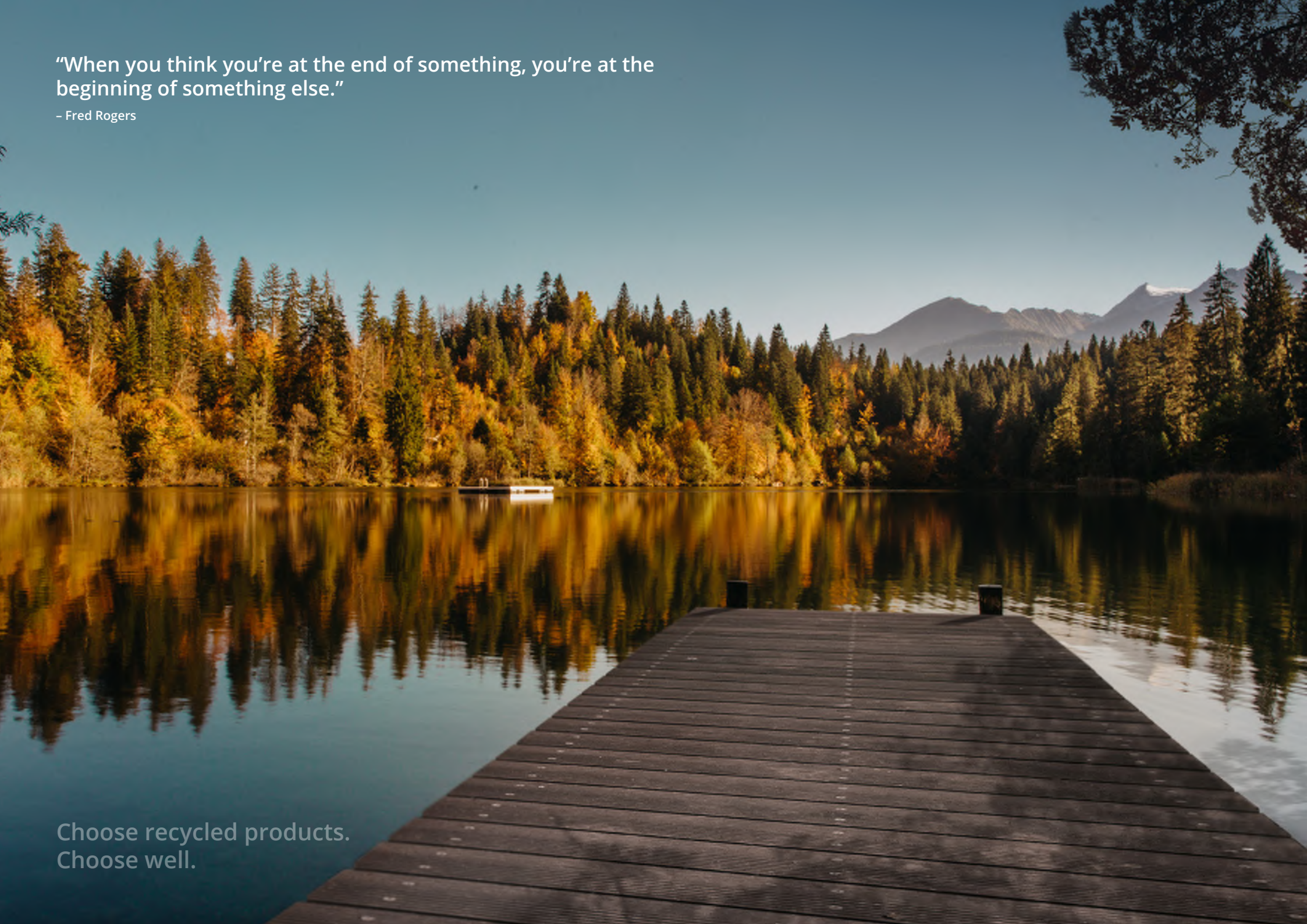

“When you think you’re at the end of something, you’re at the beginning of something else.”

– Fred Rogers

Choose recycled products.
Choose well.

Recycled Plastic Decking

all hands on deck with our maintenance free decking solutions

Home | Horticulture | Road/Highways | Education | Docks/Marinas | Agriculture | Events | Building Material

Decking

Available in the following colours:

Our innovative decking profiles are manufactured from recycled plastic. Our profiles were developed for use on terraces, patios and in gardens, offering neat and sophisticated finish in primary colours: carbon black and dark brown.
Plaswood decking profile design has been perfected to ensure it is maintenance free, high performance, durable and weather proof. For you to enjoy, not maintain.

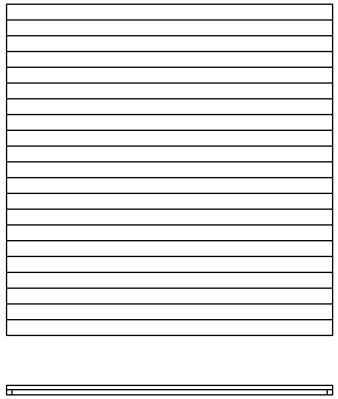

JOIST INSTALLATION

JOISTS ARE AN IDEAL SOLOUTION FOR STABILISING CORNER JOISTS

1 - THE JOISTS ARE PLACED DIRECTLY ONTO THE SUBSOIL BUT ARE NOT ANCHORED TO THE GROUND

2 - TO ENSURE A STABLE STRUCTURE, IT IS ADVISED TO ATTACH CROSSBEAMS/ NOGGINGS BETWEEN THE JOISTS - THIS WILL ALSO MAKE IT EASIER TO INSTALL THE BOARDS

3 - WHERE MORE THAN ONE JOIST IS REQUIRED TO RUN THE LENGTH OF THE APPLICATION, THE JOISTS NEED TO BE ATTACHED TO EACH OTHER. THIS CAN BE ACHIEVED BY SAWING OFF A PIECE OF JOIST AND SCREWING IT TO BOTH JOISTS AT THE JOIN - PLEASE SEE DRAWING A AND B

4 - WHERE TWO BOARDS ABUT ALONG THE LENGTH OF THE APPLICATION, THIS REQUIRES TWO JOISTS TO SUPPORT THE ENDS OF THE BOARDS, I.E. ONE JOIST IS REQUIRED TO SUPPORT THE END OF ONE JOIST AND ANOTHER JOIST IS NEEDED TO SUPPORT THE START OF THE NEXT BOARD

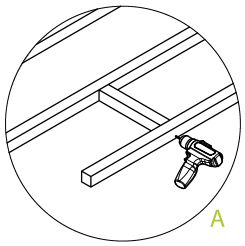

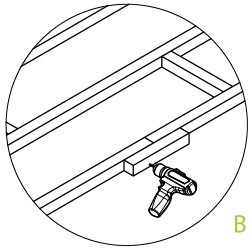

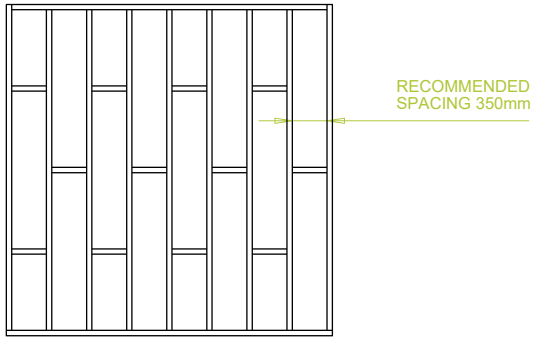

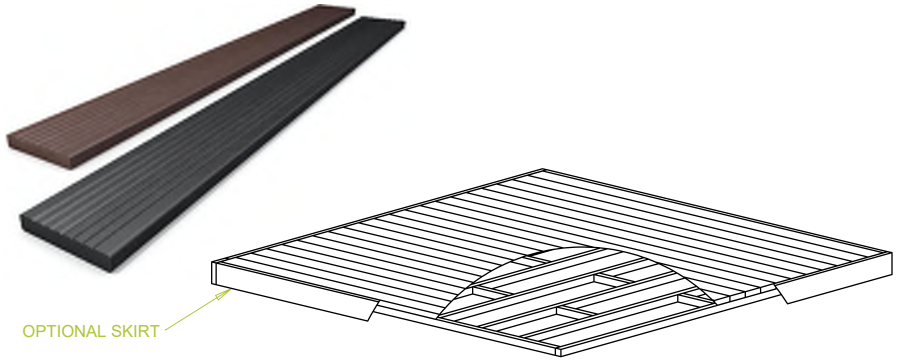

RECOMMENDATION: ALWAYS ALLOW A 50mm MINIMUM EXPANSION GAP BETWEEN THE JOIST AND ANY WALL.
ONLY ALLOW A 50mm OVERHANG OF THE BOARD AT THE ENDS OF THE APPLICATION.

Component	Dimension	Quantity per 1m x 1m area	Quantity per 3m x 3m area
Decking	40mm x 150mm x 3100mm	3	20
Decking	30mm x 150mm x 3100mm	3	20
Joists	50mm x 50mm x 3100mm	2	14
Noggins	50mm x 50mm x 3100mm	1	3

Elevated structures will require uprights and 50x100 or 50x120 joists, depending on elevation height- please contact our team for advice.

Recycled Plastic Fencing

don’t be on the fence about recycled plastic products

Home | Horticulture | Road/Highways | Education | Docks/Marinas | Agriculture | Events | Building Material

Birdmouth
fencing

Available in the following colours:

Plaswood Birdsmouth fencing (also referred to as knee rail fencing) creates an attractive, strong and durable boundary, it is particularly popular for use around car parks, play areas and parks.

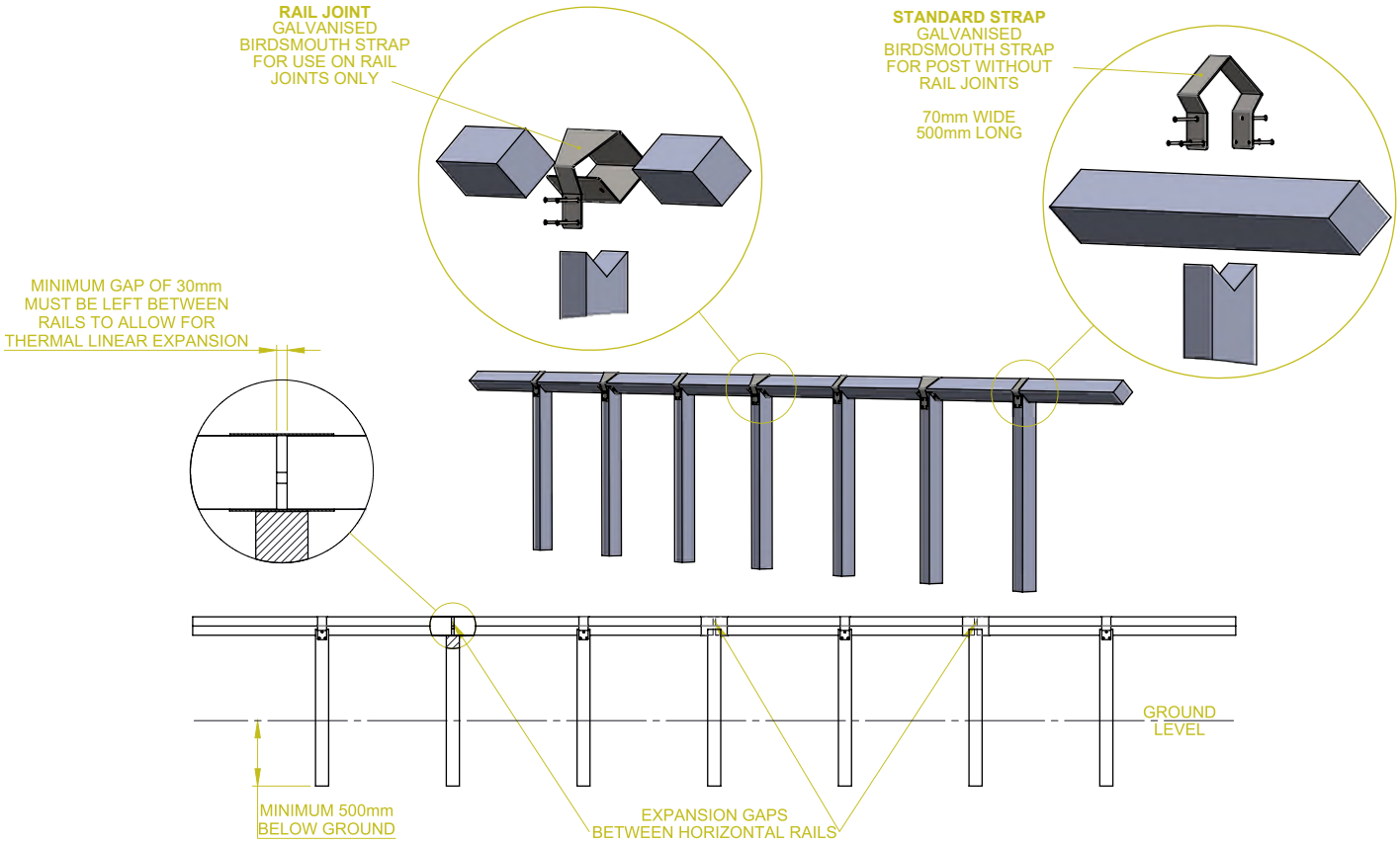

Component	Dimension	Quantity per 3m
Post	80mm x 80mm x Height*	3
Rail	80mm x 80mm x 3000mm	1
Post	100mm x 100mm x Height*	3
Rail	100mm x 100mm x 3000mm	1

*Customer to specify

Component	Dimension	Pack Size
Standard Stap	70mm wide/500mm long	Per Item
Rail Joints	Birdsmouth 2 piece straps	Per Item
Fixings for Straps	8mm x 40mm round head screws	1000

Mortise Post and Rail

fencing

Available in the following colours:

Post and Rail fencing offers a classic rural look for any rural landscape but can also add effective demarcation within urban areas.

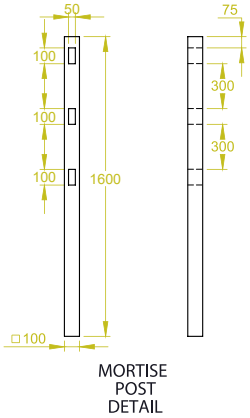

MORTISE POST DETAIL

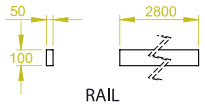

RAIL DETAIL

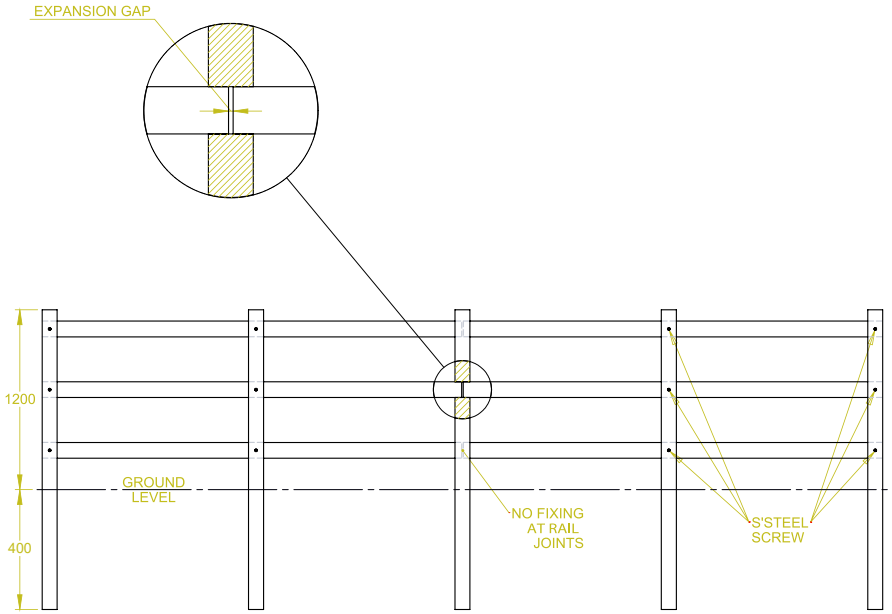

Posts can be anchored to the ground using the same method as timber and steel posts, by concreting, hammered mechanically or surface fixed.

Rails	Component	Dimension	Quantity per 3m
Two rails	Post	100mm x 100mm x Height*	3
	Rail	50mm x 100mm x 3000mm	2
Three rails	Post	100mm x 100mm x Height*	3
	Rail	50mm x 100mm x 3000mm	3

*Customer to specify

Post and Rail 2 Rail System

fencing

Available in the following colours:

Plaswood post and rail is an iconic sight in the British landscape, it is attractive, functional and durable. Often used for paddock fencing and roadside fencing, post and rail is a cost-effective option. Plaswood is rustic looking yet maintenance free.

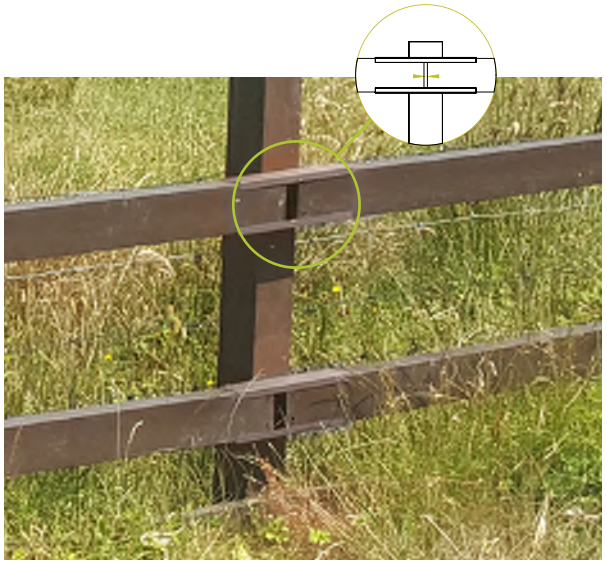

Posts can be anchored to the ground using the same method as timber and steel posts, by concreting, hammered mechanically or surface fixed.

Component	Dimension	Quantity per 3m
Post	100mm x 100mm x Height*	3
Rail	50mm x 100mm x 3000mm	2

*Customer to specify

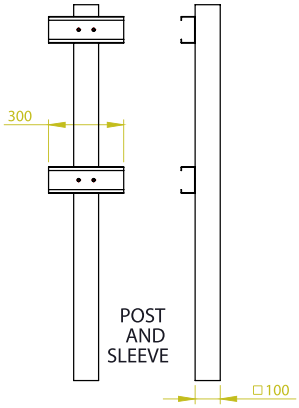

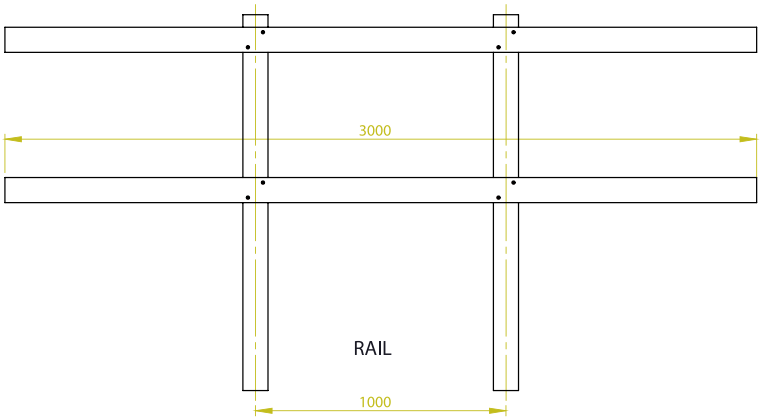

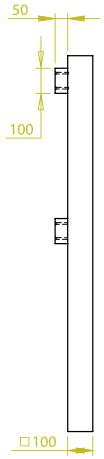

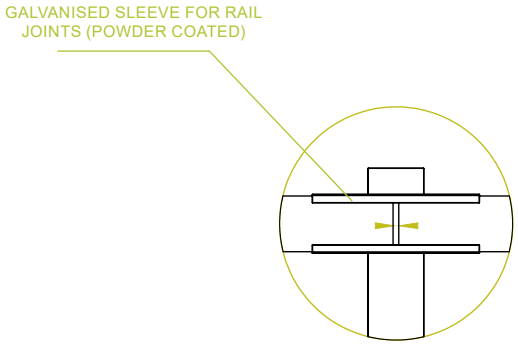

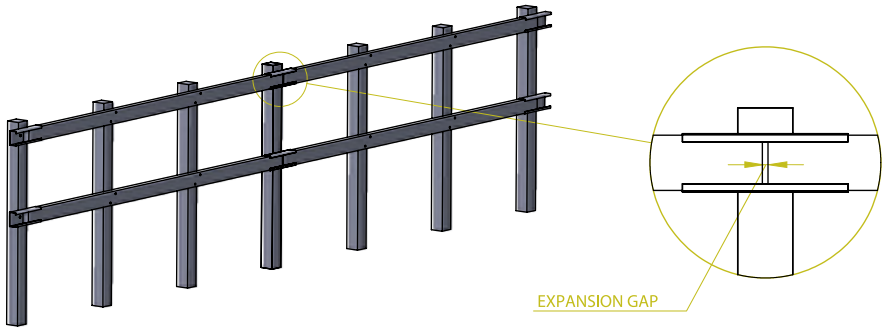

Post and Rail 3 Rail System

fencing

Available in the following colours:

Plaswood Post and Rail fencing design can be installed with two, three or more rails depending on requirements. Rails can be face fixed with screws/bolts or joined by means of mortise and tenon.

Posts can be anchored to the ground using the same method as timber and steel posts, by concreting, hammered mechanically or surface fixed.

Component	Dimension	Quantity per 3m
Post	100mm x 100mm x Height*	3
Rail	50mm x 100mm x 3000mm	3

*Customer to specify

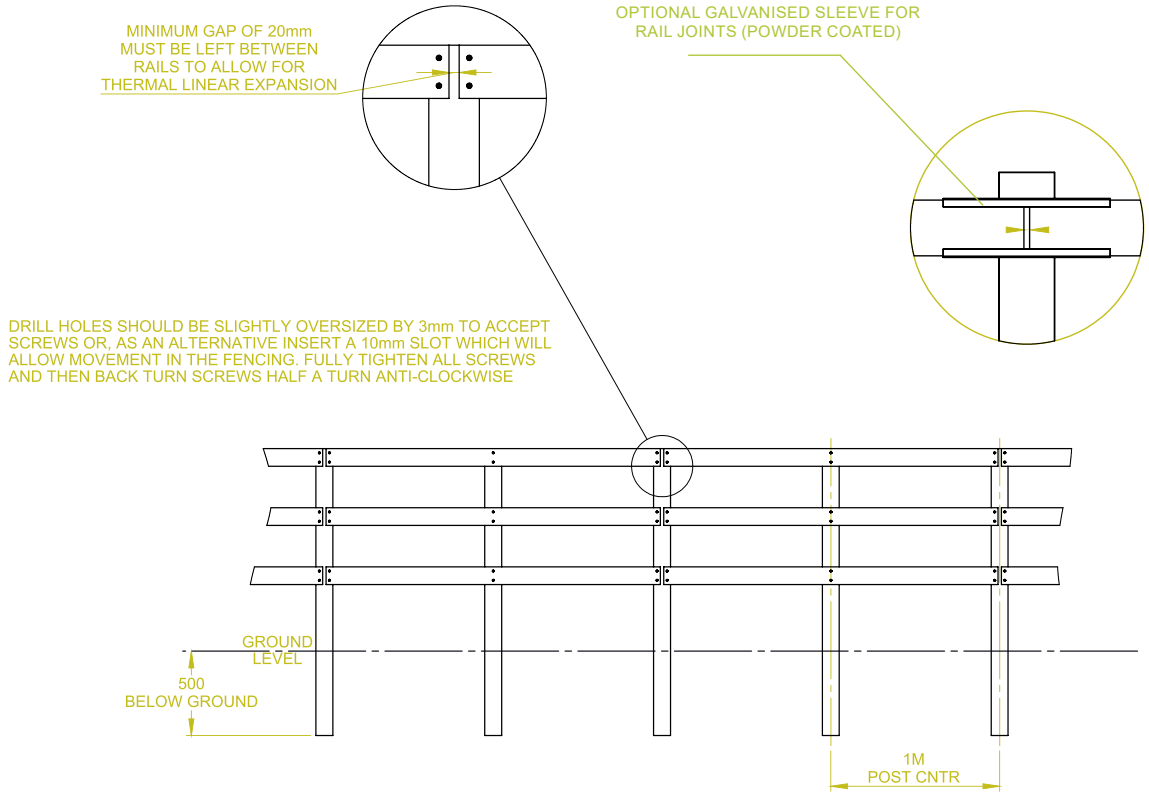

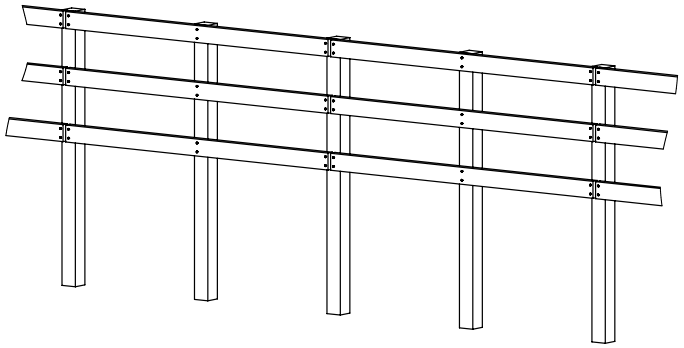

Picket Pale

fencing

Available in the following colours:

Picket pales can be used in conjunction with either the face fixed or mortised post and rail type of structure. This traditional pale cottage fence is equally suitable for low-level boundary fencing or six foot privacy screen. Our picket pales are available pointed, round or flat top.

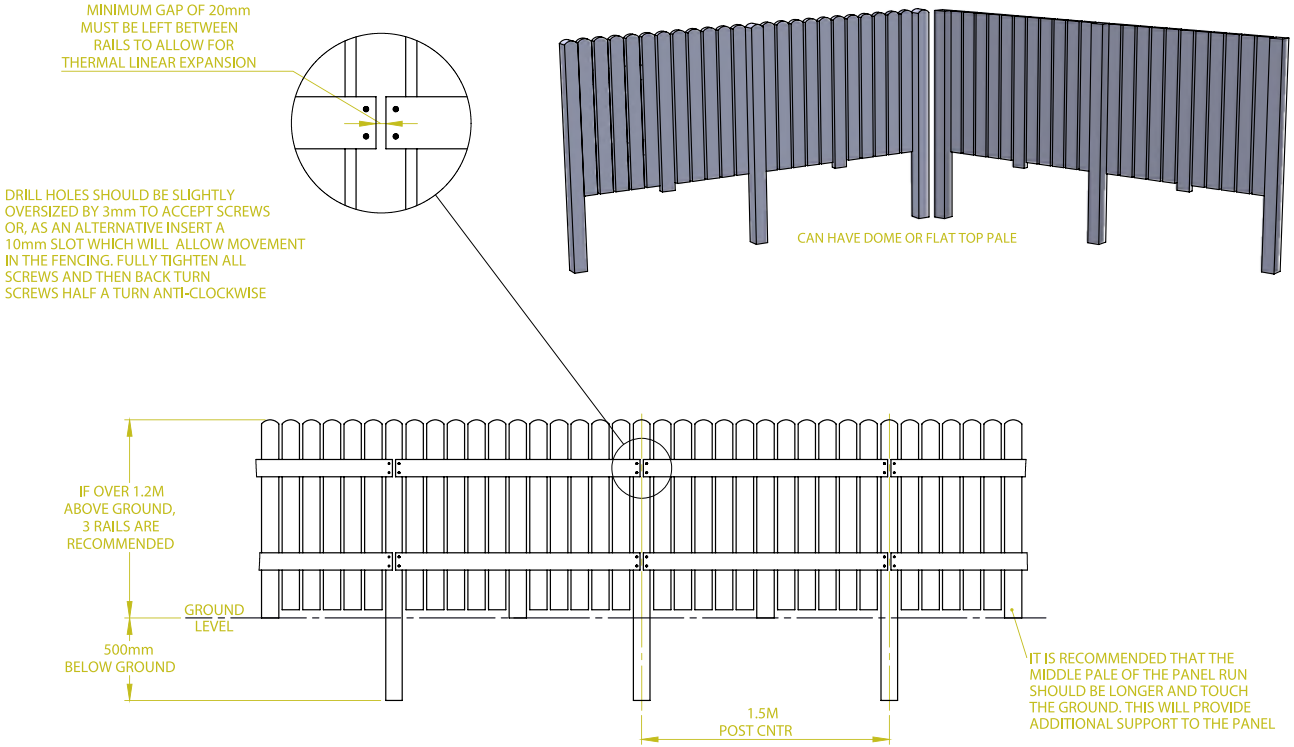

Description	Component	Dimension	Quantities per 3m
Black 1.2m High / Posts at 1.5m centres	Post	100mm x 100mm x 1700mm	2
	Rail	50mm x 100mm x 3000mm	2
	Pale	30mm x 100mm x 1100mm	22
	Centre Pale	30mm x 100mm x 1200mm	2
			Quantities per 2.8m
Brown 1.2m High / Posts at 1.4m centres	Post	100mm x 100mm x 1700mm	2
	Rail	45mm x 105mm x 2800mm	2
	Pale	20mm x 100mm x 1100mm	20
	Centre Pale	20mm x 100mm x 1200mm	2
			Quantities per 3m
Multi-Coloured 1.2m High / Posts at 1.5m centres	Post	100mm x 100mm x 1700mm	2
	Rail	50mm x 100mm x 3000mm	2
	Pale	18mm x 140mm x 1100mm	16
	Centre Pale	18mm x 140mm x 1200mm	2

Description	Component	Dimension	Quantities per 3m
Black 1.8m High / Posts at 1.5m centres	Post	100mm x 100mm x 2300mm	2
	Rail	50mm x 100mm x 3000mm	3
	Pale	30mm x 100mm x 1700mm	22
	Centre Pale	30mm x 100mm x 1800mm	2
			Quantities per 2.8m
Brown 1.8m High / Posts at 1.4m centres	Post	100mm x 100mm x 2300mm	2
	Rail	45mm x 105mm x 2800mm	2
	Pale	20mm x 100mm x 1700mm	20
	Centre Pale	30mm x 100mm x 1800mm	2
			Quantities per 3m
Multi-Coloured 1.8m High / Posts at 1.5m centres	Post	100mm x 100mm x 2300mm	2
	Rail	50mm x 100mm x 3000mm	3
	Pale	18mm x 140mm x 1700mm	16
	Centre Pale	18mm x 140mm x 1800mm	2

Post and Rail Screen

fencing

Available in the following colours:

This flexible design will allow you to create a privacy screen with components and bracing configurations matching your requirements.
It can be fabricated with or without gaps between rails, suitable for garden screen, bin covers or just ordinary boundary fencing.

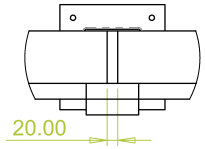

DETAIL A

MINIMUM GAP OF 20MM MUST BE LEFT BETWEEN RAILS TO ALLOW FOR THERMAL EXPANSION

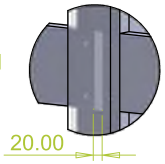

DETAIL B

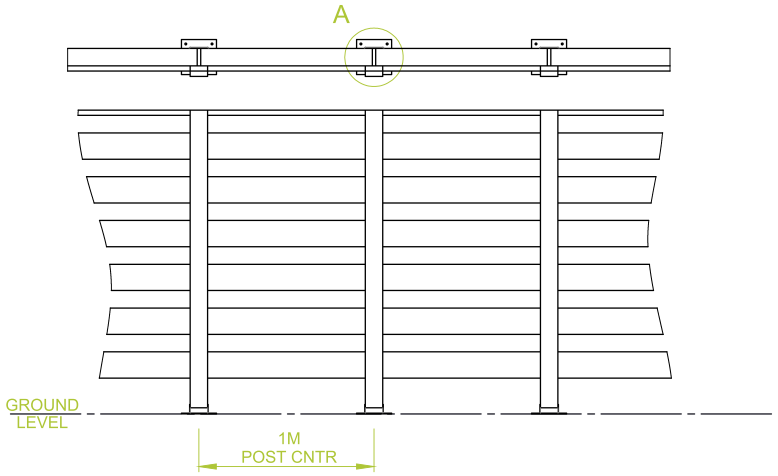

DRILL HOLES SHOULD BE SLIGHTLY OVERSIZED BY 3mm TO ACCEPT SCREWS OR, AS AN ALTERNATIVE INSERT A 10mm SLOT WHICH WILL ALLOW MOVEMENT IN THE FENCING. FULLY TIGHTEN ALL SCREWS AND THEN BACK TURN SCREWS HALF A TURN ANTI-CLOCKWISE

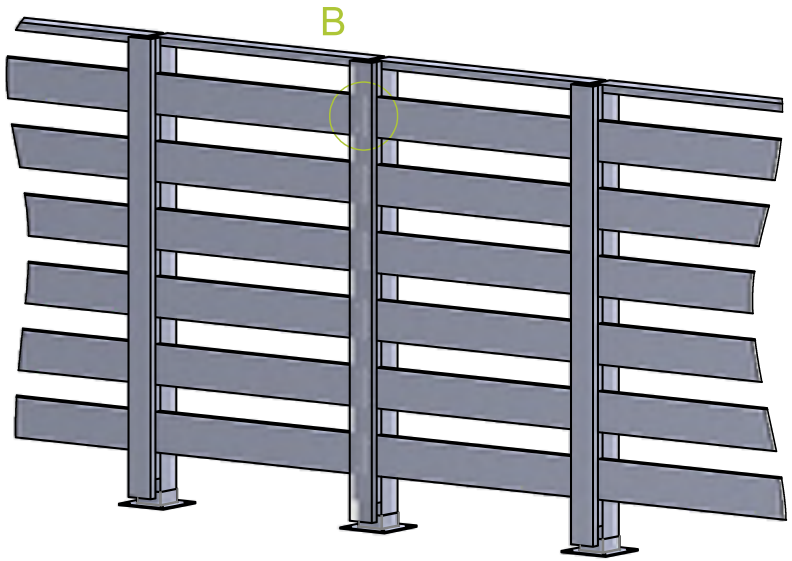

Description	Component	Dimensions	Quantity per Panel
Panel - 1m Wide x 1.7m High	Post - Surface Fixed	100mm x 100mm x 1700mm	1
	Post - Ground Fixed	100mm x 100mm x 2200mm	1
	Rails	30mm x 150mm x 1000mm	6
	Stoppers	30mm x 100mm	6
	Cover for Post	30mm x 100mm x 1700mm	1
	Cover for Top Rail	30mm x 100mm x 1000mm	1

Posts can be anchored to the ground using the same method as timber and steel posts, by concreting, hammered mechanically or surface fixed.

Log Roll/Palisade

fencing

Available in the following colours:

Palisade with a difference, manufactured in various diameters and lengths. Plaswood log roll palisade is one of most sought after first line of perimeter defences. Our palisade posts are easy to install and have appealing aesthetic appearance. Plaswood palisades are cost effective compared to concrete walls offering excellent boundary for your home, garden or business.

Log roll is available in various lengths, please contact our team for more information.

Not all the dimensions are intended for slant reinforcement/revetment. We will be happy to advise.

STANDARD DIMENSIONS

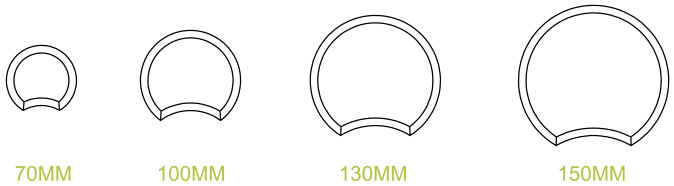

AVAILABLE CUT TO SIZE AND WITH POINTED ENDS FOR EASIER INSTALLATION.

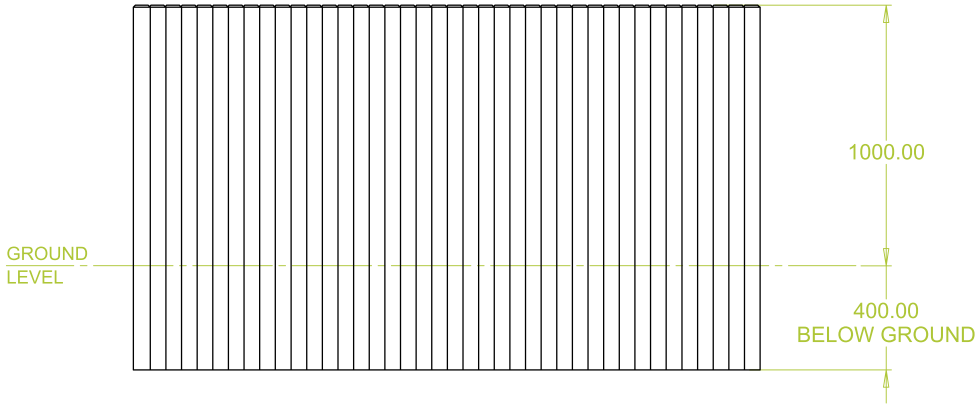

Diameter	Dimensions
ø 70mm	» Slump (S): approx. 53mm » Required quantity (B): approx. 19.0 per meter » Fillet angle: approx. 80°
ø 100mm	» Slump (S): approx. 77mm » Required quantity (B): approx. 13.0 per meter » Fillet angle: approx. 80°
ø 130mm	» Slump (S): approx. 110mm » Required quantity (B): approx. 9.0 per meter » Fillet angle: approx. 60°
ø 150mm	» Slump (S): approx. 110mm » Required quantity (B): approx. 9.0 per meter » Fillet angle: approx. 80°

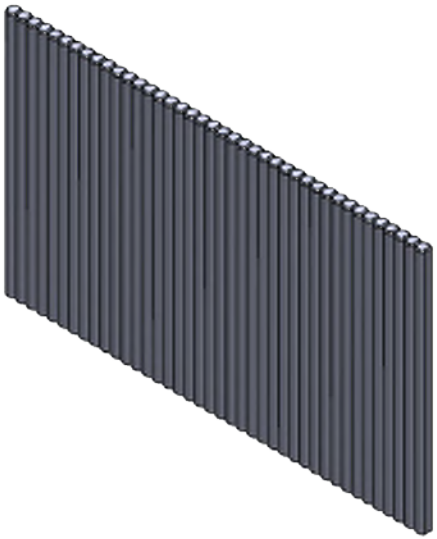

Caution:
Not all the dimensions are intended for slope reinforcement. Let us advise you in cases of uncertainty.

"Be the change you wish to see in the world."
– Mahatma Gandhi
Choose recycled products.
Choose well.

Recycled Plastic Lumber

profiles

Sustainable by design with endless possibilities

Please contact us to discuss your lumber requirements

Plaswood Lumber 30mm x 100mm x 3100mm Rectangular

Plaswood Lumber 20mm x 100mm x 1800mm Rectangular

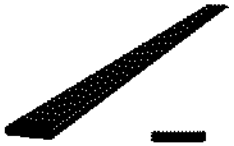

Plaswood Lumber 30mm x 150mm x 3100mm Rectangular

Plaswood Lumber 40mm x 100mm x 3100mm Rectangular

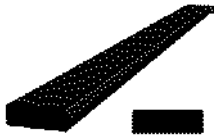

Plaswood Lumber 50mm x 100mm x 3100mm Rectangular

Plaswood Lumber 50mm x 120mm x 2800mm Rectangular

Plaswood Lumber 50mm x 50mm x 3100mm Square

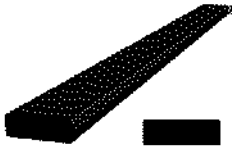

Plaswood Lumber 75mm x 220mm x 3100mm Rectangular

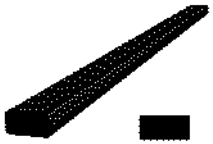

Plaswood Lumber 75mm x 150mm x 3100mm Rectangular

Plaswood Lumber 80mm x 230mm x 2500mm Sleeper

Plaswood Lumber 150mm x 150mm x 2800mm Square

Plaswood Lumber 155mm x 210mm x 2250mm Sleeper

Plaswood Lumber 160mm x 240mm x 2800mm Sleeper

Plaswood Lumber 75mm x 75mm x 3100mm Square

Plaswood Lumber 80mm x 80mm x 3100mm Square

Plaswood Lumber 100mm x 100mm x 3100mm Square

Plaswood Lumber 60mm Diameter x 3100mm Round

Plaswood Lumber 80mm Diameter x 3100mm Round

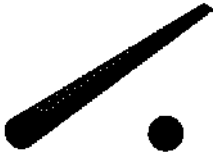

Plaswood Lumber 100mm Diameter x 3100mm Round

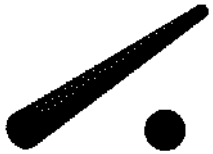

Plaswood Lumber 120mm Diameter x 3100mm Round

Plaswood Lumber 45/55mm x 150mm x 3100mm Tapered

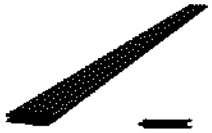

Plaswood Lumber 32mm x 150mm x 3600mm T&G

Plaswood Lumber 40mm x 150mm x 3000mm Decking

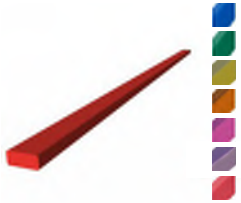

Colour Lumber 38mm x 90mm x 3100mm

Colour Lumber 18mm x 140mm x 3100mm

Recycled Plastic Coloured Lumber

*Subject to minimum order quantities, please contact our team for product availability.

Product	Dimensions (mm)	Length (mm)	Units Per Pallet	Jet Black	Slate Grey	Earth Brown	Olive Green	Weight (kg)	Special
Rectangle	20 x 60	1500	260		✔	✔		1.70	
	20 x 100	2800	160		✔	✔		5.20	
	25 x 120	2800	120		✔	✔		7.90	
	30 x 60	2800	260		✔	✔		4.70	
	30 x 100	2800	60		✔	✔		7.80	
	25 x 120	2800	120		✔	✔		10.90	
	35 x 135	2800	120		✔	✔		12.60	
	40 x 80	2800	120		✔	✔		8.40	
	45 x 105	2800	120		✔	✔		12.40	
	50 x 120	2800	91		✔	✔		15.60	
	60 x 120	2800	91		✔	✔		18.80	
	32 x 150	3600	84		✔	✔		15.40	
	40 x 120	3600	72	✔	✔	✔	✔	15.40	
	40 x 150	3600	84	✔	✔	✔	✔	19.20	
	50 x 100	3600	90	✔	✔	✔	✔	15.90	
	50 x 120	3600	72	✔	✔	✔	✔	20.20	
	60 x 120	3600	72	✔	✔	✔	✔	23.10	
	40 x 120	1800	72	✔	✔	✔	✔	9.00	Reinforced Bench Profile
	50 x 120	1800	72	✔	✔	✔	✔	12.00	Reinforced Bench Profile
	30 x 140	3600	105	✔	✔	✔	✔	11.80	Rounded Edges
	35 x 105	3600	90		✔	✔	✔	11.50	Rounded Edges
	30 x 38	3600	120	✔	✔	✔	✔	4.46	Rounded Edges
	45 x 60	2400	170	✔	✔	✔	✔	5.00	Rounded Edges
Square	40 x 40	2400	500		✔	✔		3.80	
	70 x 70	2800	121		✔	✔		5.25	
	90 x 90	2800	90		✔	✔		1.10	
	100 x 100	2800	80		✔	✔		26.05	
	120 x 120	2800	48		✔	✔		37.50	
	150 x 150	2800	30		✔	✔		58.60	
	60 x 60	3600	128	✔	✔	✔	✔	11.50	
	80 x 80	3600	72	✔	✔	✔	✔	20.00	
	100 x 100	3600	40	✔	✔	✔	✔	30.00	
	120 x 120	3100	30		✔	✔		37.01	
	150 x 150	1400	30		✔	✔		25.28	
	70 x 70	2800	121		✔	✔		12.70	Square in section with pointed end
	90 x 90	2800	90		✔	✔		21.10	Square in section with pointed end

Product	Dimensions (mm)	Length (mm)	Units Per Pallet	Yellow	Green	Blue	Red	Pink	Grey	Purple	Orange
Rainbow	18 x 140	3200	160	✔	✔	✔	✔				
	38 x 90	3200	120	✔	✔	✔	✔	✔	✔	✔	✔

Product	Dimensions (mm)	Length (mm)	Units Per Pallet	Jet Black	Slate Grey	Earth Brown	Olive Green	Weight (kg)	Special
Round Sections without Point	80 diameter	3600	92	✔	✔	✔	✔	15.63	
	100 diameter	3600	50	✔	✔	✔	✔	23.90	
	120 diameter	3600	45	✔	✔	✔	✔	33.00	
Round Sections with Point	45	1750	300		✔	✔		2.60	
	60	2500	125		✔	✔		6.60	
	70	2500	150		✔	✔		9.00	
	80	2800	60		✔	✔		13.10	
	100	2900	33		✔	✔		21.50	
	120	2800	28		✔	✔		29.40	
	150	2800	30		✔	✔		46.00	
Tongue & Groove Sections	22 x 150	2400	140	✔	✔	✔	✔	6.50	
	28 x 150	3910	119	✔	✔	✔	✔	13.30	
	28 x 150	3650	119	✔	✔	✔	✔	12.50	
	28 x 150	2400	119	✔	✔	✔	✔	7.80	
	32 x 150	3910	105	✔	✔	✔	✔	15.30	
	32 x 150	3650	105	✔	✔	✔	✔	14.30	
	32 x 150	2400	105	✔	✔	✔	✔	8.80	
	34 x 150	3910	105	✔	✔	✔	✔	15.70	
	34 x 150	3650	105	✔	✔	✔	✔	14.64	
	38 x 150	3910	91	✔	✔	✔	✔	17.90	
	38 x 150	3650	91	✔	✔	✔	✔	16.70	
	38 x 150	2400	91	✔	✔	✔	✔	10.90	
Decking	48 x 165	3000	75		✔	✔		16.50	
	48 x 165	3000	75		✔	✔		16.50	With Reinforcement
	40 x 170	3000	75		✔	✔		17.00	With Tongue & Groove
	40 x 170	3000	75		✔	✔		17.00	With Tongue & Groove Reinforcement
	30 x 150	3600	77	✔	✔	✔		14.00	With Tongue & Groove Reinforcement
Beams & Sleepers	155 x 210	2250	20		✔	✔		21.10	Textured Surface
	115 x 210	2250	20		✔	✔		21.10	Smooth Surface
	155 x 210	2250	20		✔	✔		21.10	Rounded Edges
	160 x240	2800	20		✔	✔		100.00	Rounded Edges
	80 x230	2250	30		✔	✔		42.50	Rounded Edges
	50 x260	2250	30		✔	✔		33.00	Curb Stones
Specialist Fencing Sections	20 x 60	1500	-		✔	✔	✔	1.70	Pale with Rounded Top
	30 x 100	1500	-		✔	✔	✔	4.20	Pale with Rounded Top
	90 x 90	200	-		✔	✔	✔	15.00	Pale with Rounded Top

Plaswood

tooling and fixing guidelines

Sawing

Circular blades with crossed teeth have been found to be most suitable. We suggest a saw speed between 2,000 and 4,000 rpm. Sawing is best done from the presentation face (the side that will be seen) and cut through to the back face of the profile.

Drilling

Twist drills are most efficient but standard spiral bits can also be used. Drills with speeds of 400 - 900 rpm are better than high-speed drills. Holes are best placed 10mm plus from the profile edge.
Remove waste material and pause occasionally to allow the bit to cool.

Jointing

A joint may incorporate more than one method of fixing. Finger type and mortice and tenon or birdsmouth type joints can be made using standard wood working machinery with the appropriate cutters.

Fixing

Twin flight, parallel thread, coarse pitch screws, similar to those used with wooden particle boards or hi-low screws, have been found to be more reliable than conventional taper thread wood screws.

Stapling

Due to compact surface it is more difficult to penetrate Plaswood than wood. Stapling has been found to be an effective method for applications such as wire mesh fencing fixing. We recommend pneumatically powered guns for use on these types of fixings.

Planing

Standard industrial timber planing tools can be used. The finish depends on the condition of the blade, feed rate, cutting speed, clearance and cutting angle.

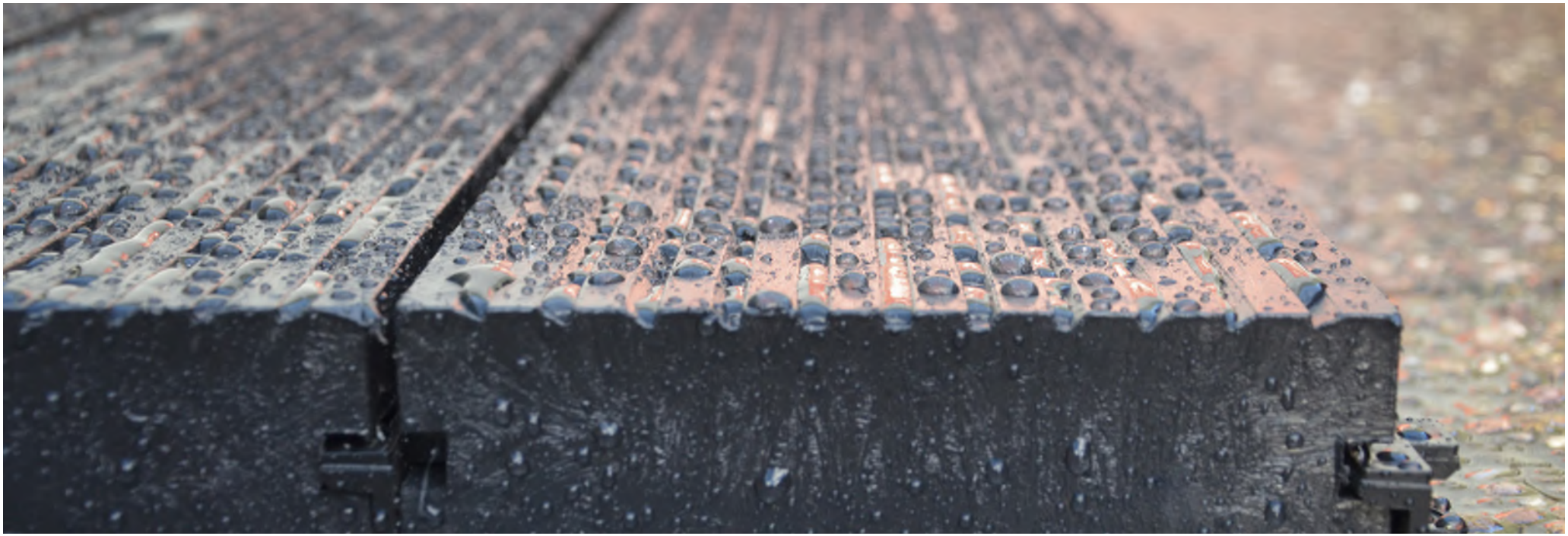

Plaswood

installation and material handling tips

Expansion
The lower the temperature during installation, the more the boards may expand. Plaswood material has an average linear expansion of 0.109mm/m/°C. It is vital to calculate the maximum expansion/contraction of the boards in order to establish correct expansion/contraction gaps.

Calculation example:
Installation of 3.1m decking at a temp of 15°C
Max. Temperature expected 40°C
Temperature at Installation 15°C
Temperature difference 25°C
Interval = 0.109mm/m/°C.
Calculation: 0.109mm x 3.1m x 25°C = 8.44mm

Flexibility
Recycled plastic is more flexible than wood or metal. All product and structure designs facilitate this technical characteristic (e.g. maximum distance between fence posts), furthermore, all of our products are supplied with installation or fabrication recommendations.

Material Structure Plaswood
Plaswood profiles bear a non-porous surface resembling timber grain and a honeycomb core. The internal air pockets may be visible when the end of the profile is cut.

Bolts and Screws
We recommend that all fixings are made from stainless steel/brass or are plated, to retain the integrity, long life, rot free, maintenance free, quality of the final product.

When bolting or screwing profiles together, the pilot hole must be larger than the bolt. Elongated slots are recommended to facilitate temperature related expansion/contraction of the material.

Impact
Use of a ram or protective sleeve is recommended if profiles are hammered mechanically into the ground – it will prevent potential damage to the product.

Storage
Direct sunlight may affect profile alignment and cause profile distortion. To prevent profile bowing profiles should be stored on a flat surface, strapped in batches.

For further structural Plaswood advise and recommendations please visit www.plaswood.eco or call +44 (0) 333 202 6800

plaswood®

+44 (0) 333 202 6800
plaswoodsales@rpc-bpi.com
www.plaswood.eco

FSC®

a brand of Berry