SPECIFICATION SHEET

GATEMATE BY BIRKDALE

GATEMATE PREMIUM LONG THROW LOCKS

PRODUCT CODE PREFIX: 149 & 147

FIXINGS INCLUDED

DOUBLE LOCKING

Double-Locking:

These Premium Long Throw Locks are easy-to-fit and offer the property owner great security for gates, sheds, and workshop doors. They are key lockable form both sides.

These are some of the features of the locks :

- Available with a 50mm and 70mm barrel (suit 50mm or 70mm gate/door).
- The throw (distance for edge of body to end of bar in lock position) is 65mm.
- 18mm x 18mm solid stainless steel latch bar
- 6 pin lock barrels
- 5 keys (dimple type)
- All stainless-steel fixings
- Brass escutcheon plate and screws
- 28mm spade drill bit

Keyed alike locks in both 50mm and 70mm versions are available. (One key fits all locks).

SINGLE LOCKING

Single-Locking:

These Premium Long Throw Locks are easy-to-fit and offer the property owner great security for gates, sheds, and workshop doors. They are key lockable form one side with the provision of a slide bolt on the other. This is released via a push button and hand slide button operated simultaneously.

Some of the features of the locks are -

- Available with a 50mm and 70mm barrel (suit 50mm or 70mm gate/door)
- The throw (distance for edge of body to end of bar in lock position) is 65mm
- 18mm x 18mm solid stainless steel latch bar
- 6 pin lock barrels
- 5 keys (dimple type)
- All stainless-steel fixings
- Brass escutcheon plate and screws
- 28mm spade drill bit
- Elongated keep to compensate gate sag

GATEMATE® Premium Long Throw Lock

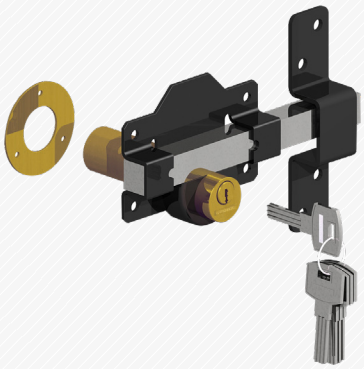

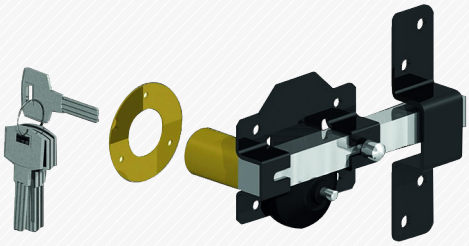

- Quality Long Throw gate locks, available with single or double locking bolts and in two different barrel lengths
- 6 pin lock barrel
- Stainless steel shoot
- All locks supplied wih 5 keys
- 28mm drill bit included
- Includes all fixings
- Locks available to suit 50mm or 70mm doors and gates

LOCK TYPE	FINISH	SIZE INS (MM)	KEYED ALIKE	MIN. ORDER QTY	OUTER CARTON QTY	CODE
Double Locking (A)	Stainless Steel/Black	2 (50)	No	1	20	**149 0186**
Double Locking (A)	Stainless Steel/Black	2¾ (70)	No	1	20	**149 0196**
Single Locking (B)	Stainless Steel/Black	2 (50)	No	1	20	**149 1106**
Single Locking (B)	Stainless Steel/Black	2¾ (70)	No	1	20	**149 1116**

GATEMATE® Premium Long Throw Lock - Keyed Alike

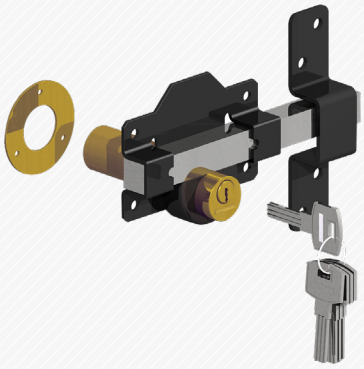

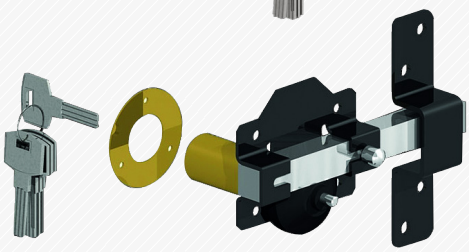

LOCK TYPE	FINISH	SIZE INS (MM)	KEYED ALIKE	MIN. ORDER QTY	OUTER CARTON QTY	CODE
Double Locking (A)	Stainless Steel/Black	2 (50)	Yes	1	20	**149 1126**
Double Locking (A)	Stainless Steel/Black	2¾ (70)	Yes	1	20	**149 1136**
Single Locking (B)	Stainless Steel/Black	2 (50)	Yes	1	20	**149 1146**
Single Locking (B)	Stainless Steel/Black	2¾ (70)	Yes	1	20	**149 1156**

GATEMATE® Pull Handle for Premium Long Throw Lock

FINISH	SIZE INS (MM)	MIN. ORDER QTY	INNER CARTON QTY	OUTER CARTON QTY	CODE
Epoxy Black	8 (200)	1	5	50	**147 2003**
Brass	8 (200)	1	5	50	**147 2005**
Chrome	8 (200)	1	5	50	**147 200C**

GATEMATE® Security Escutcheon for Premium Long Throw Lock

- Super easy to fit, this escutcheon encloses the exposed part of the lock barrel, and bolts securely through the gate to a back plate that sits neatly behind the lock plate
- High intruder resistance
- All fixings and fitting instructions included
- Anti-cut, anti-tamper and anti-drill
- Clean, in-line design

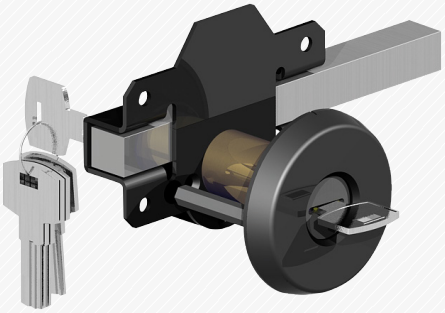

FINISH	MIN. ORDER QTY	CODE
Epoxy Black	1	**149 0006**

GATEMATE® Additional Keys for Premium Long Throw Lock

TYPE	FINISH	MIN. ORDER QTY	OUTER CARTON QTY	CODE
Blank	Chrome	1	1000	**149 0000**
Cut to key number	Chrome	1	-	**CUTKEY**

Dimensions: Single Locking 50mm

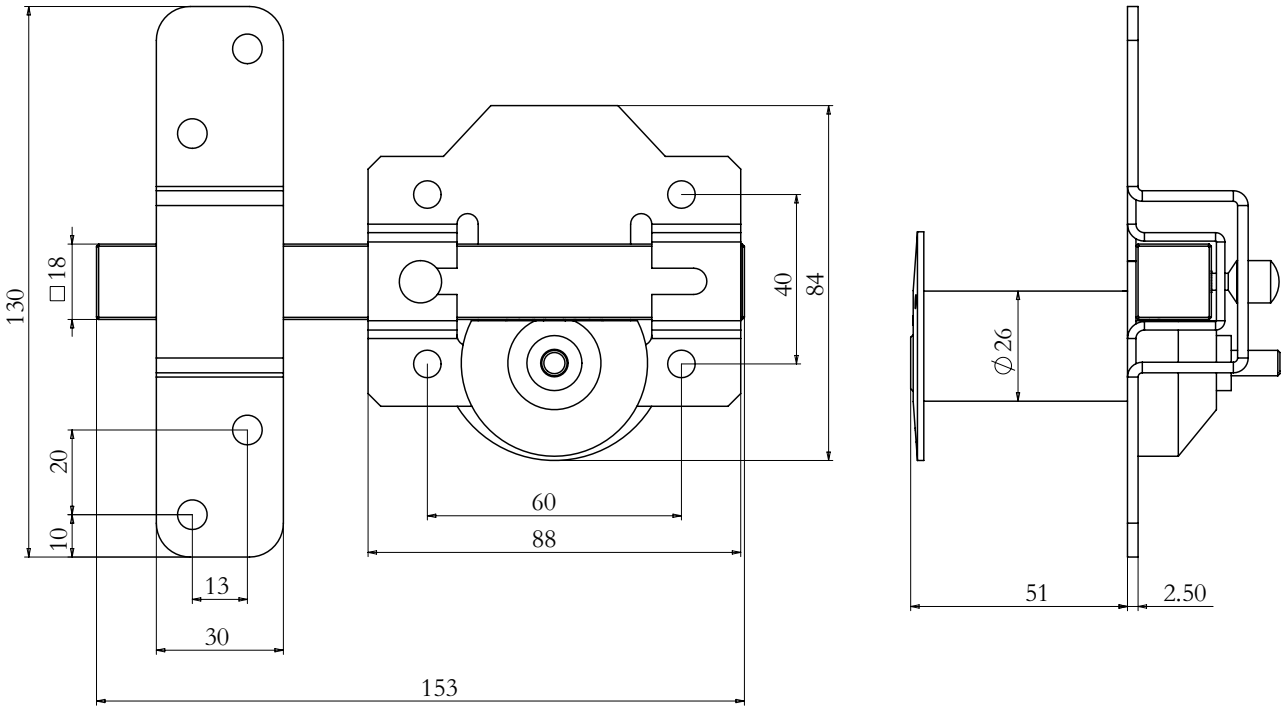

Dimensions: Single Locking 70mm

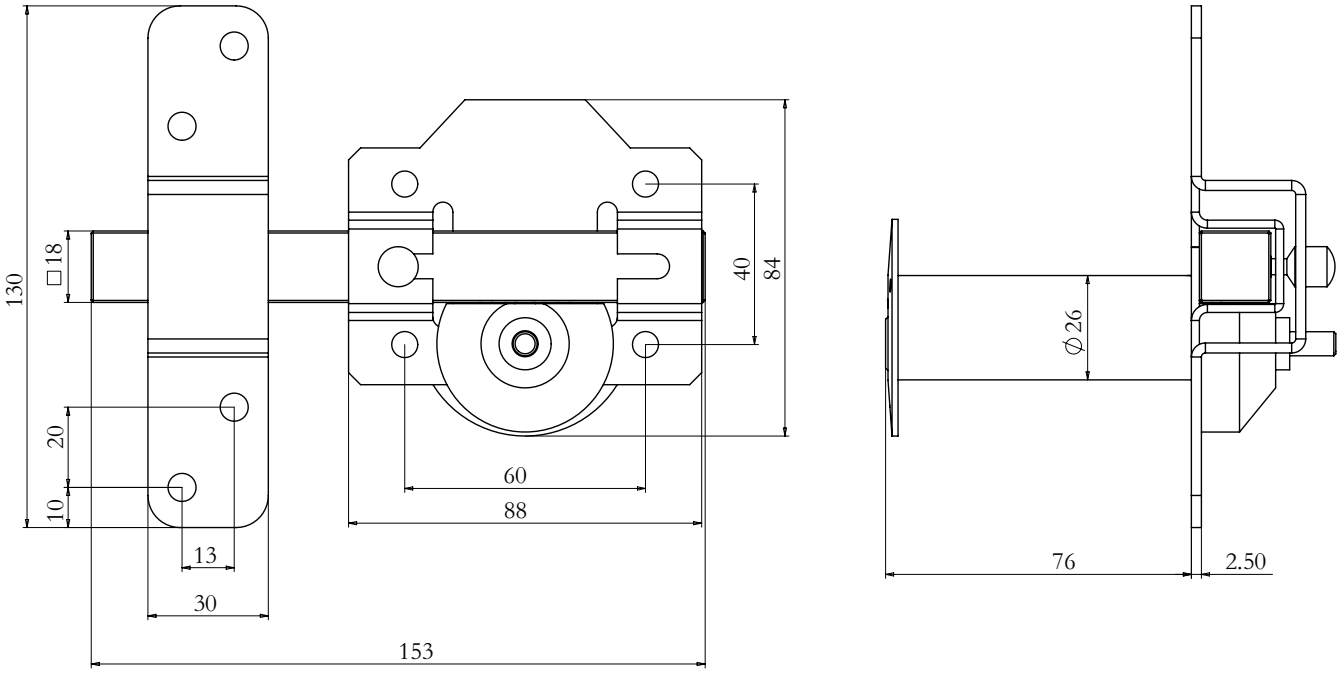

Dimensions: Double Locking Locking 50mm

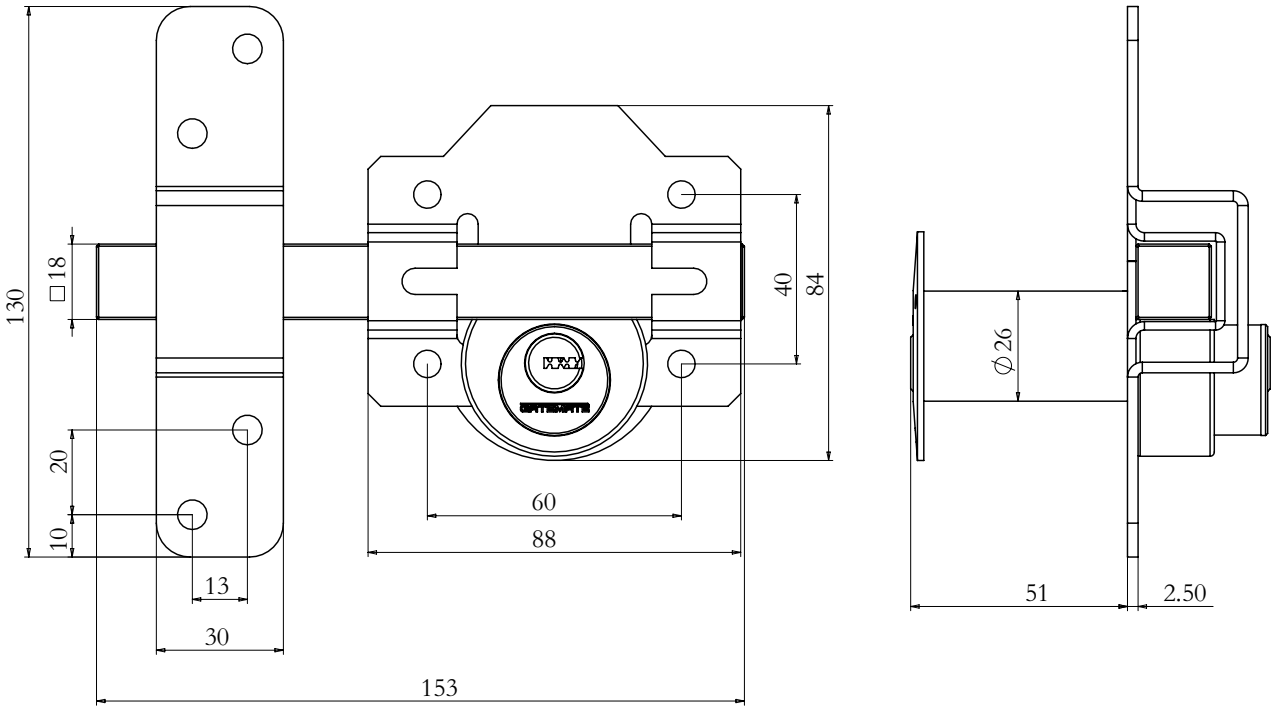

Dimensions: Double Locking 70mm

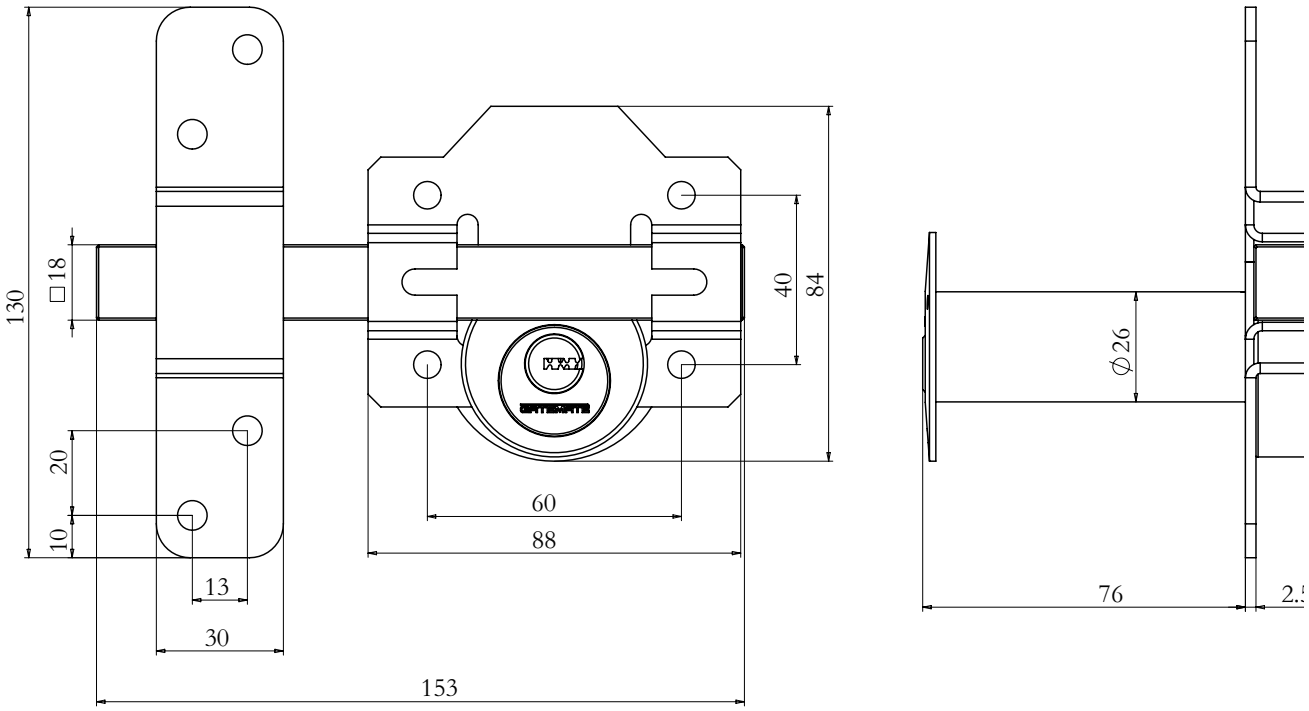

GATEMATE BY BIRKDALE

GATEMATE
PREMIUM LONG THROW LOCKS

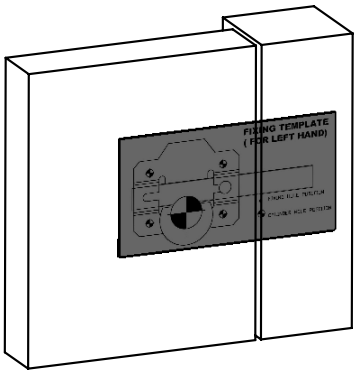

01

Using the template provided, place it on the gate to identify the correct position. Secure into position using the self adhesive pads and mark the hole position for the cylinder and the fixing screws.

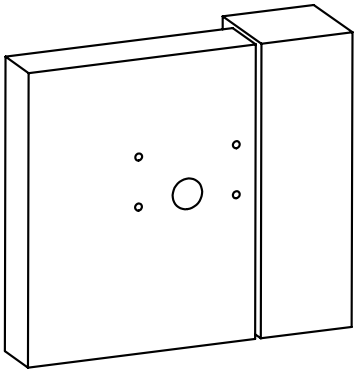

02

Drill 4x3.5mm pilot holes for the fixing screws. Drill the hole for the cylinder using a28mm spade drill.

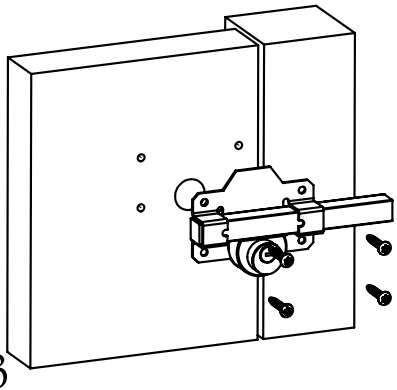

03

Insert the lock and secure into place using the fixings provided.

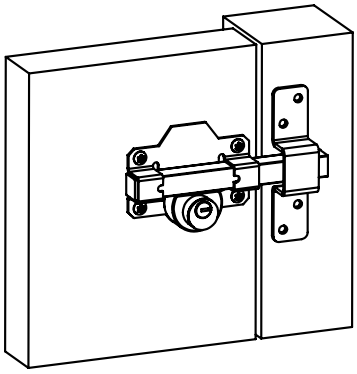

04

Position the striker over the bolt when the bolt is fully extended. Ensure the bolt is fully engaged into the striker and the striker orientation is correct.

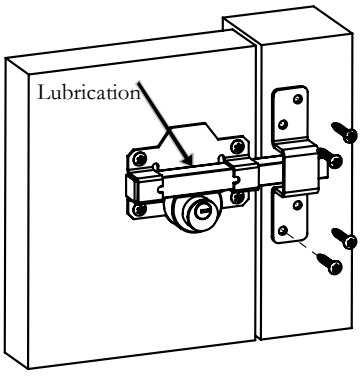

05

When the keep is in the correct position, secure the fixings provided.

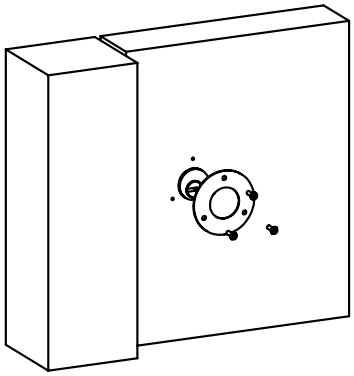

06

Place the escutcheon over the cylinder to obtain the correct position secure into position.

Tel: 0345 450 9000 **Fax:** 0345 450 9085
Email: mail@birkdalesales.com