Construction

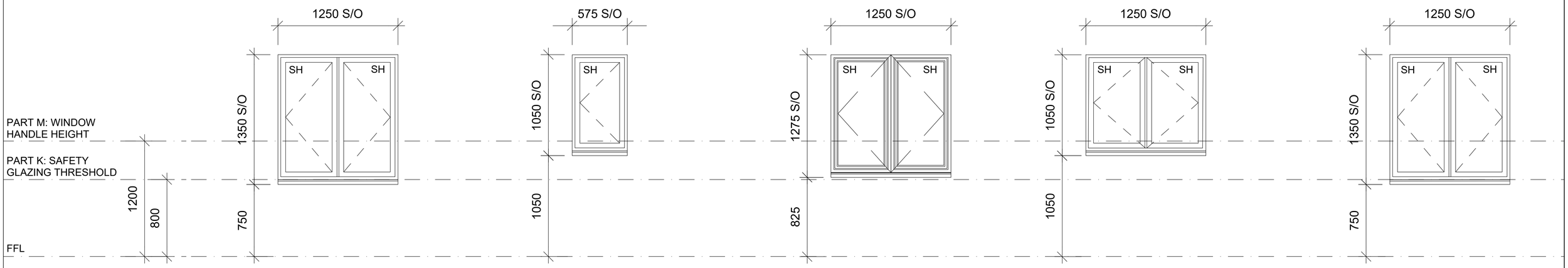

WINDOW TYPE:	NOTES:
W-HT-01	• FFL - TOP OF SCREED • ELEVATIONS BASED ON EXTERNAL FACE ONLY • FRAME HEIGHTS IN ACCORDANCE TAYLOR LANE SPECIFICATION TO ALLOW FOR DIFFERENTIAL SETTLEMENT • STRUCTURAL HEIGHT & WIDTH REFERS TO BRICK WORK STRUCTURAL OPENING ALLOWANCE
STRUCTURAL WIDTH: 1250	
STRUCTURAL HEIGHT: 1350	
FRAME HEIGHT: 1335	LEVEL: GROUND

WINDOW TYPE:	NOTES:
W-HT-02	• FFL - TOP OF SCREED • ELEVATIONS BASED ON EXTERNAL FACE ONLY • FRAME HEIGHTS IN ACCORDANCE TAYLOR LANE SPECIFICATION TO ALLOW FOR DIFFERENTIAL SETTLEMENT • STRUCTURAL HEIGHT & WIDTH REFERS TO BRICK WORK STRUCTURAL OPENING ALLOWANCE
STRUCTURAL WIDTH: 575	
STRUCTURAL HEIGHT: 1050	
FRAME HEIGHT: 1035	LEVEL: GROUND

WINDOW TYPE:	NOTES:
W-HT-03	• FFL - TOP OF SCREED • ELEVATIONS BASED ON EXTERNAL FACE ONLY • FRAME HEIGHTS IN ACCORDANCE TAYLOR LANE SPECIFICATION TO ALLOW FOR DIFFERENTIAL SETTLEMENT • STRUCTURAL HEIGHT & WIDTH REFERS TO BRICK WORK STRUCTURAL OPENING ALLOWANCE
STRUCTURAL WIDTH: 1250	
STRUCTURAL HEIGHT: 1275	
FRAME HEIGHT: 1260	LEVEL: GROUND

WINDOW TYPE:	NOTES:
W-HT-04	• FFL - TOP OF SCREED • ELEVATIONS BASED ON EXTERNAL FACE ONLY • FRAME HEIGHTS IN ACCORDANCE TAYLOR LANE SPECIFICATION TO ALLOW FOR DIFFERENTIAL SETTLEMENT • STRUCTURAL HEIGHT & WIDTH REFERS TO BRICK WORK STRUCTURAL OPENING ALLOWANCE
STRUCTURAL WIDTH: 1250	
STRUCTURAL HEIGHT: 1050	
FRAME HEIGHT: 1035	LEVEL: GROUND

WINDOW TYPE:	NOTES:
W-HT-05	• FFL - TOP OF SCREED • ELEVATIONS BASED ON EXTERNAL FACE ONLY • FRAME HEIGHTS IN ACCORDANCE TAYLOR LANE SPECIFICATION TO ALLOW FOR DIFFERENTIAL SETTLEMENT • STRUCTURAL HEIGHT & WIDTH REFERS TO BRICK WORK STRUCTURAL OPENING ALLOWANCE
STRUCTURAL WIDTH: 1250	
STRUCTURAL HEIGHT: 1350	
FRAME HEIGHT: 1325	LEVEL: FIRST

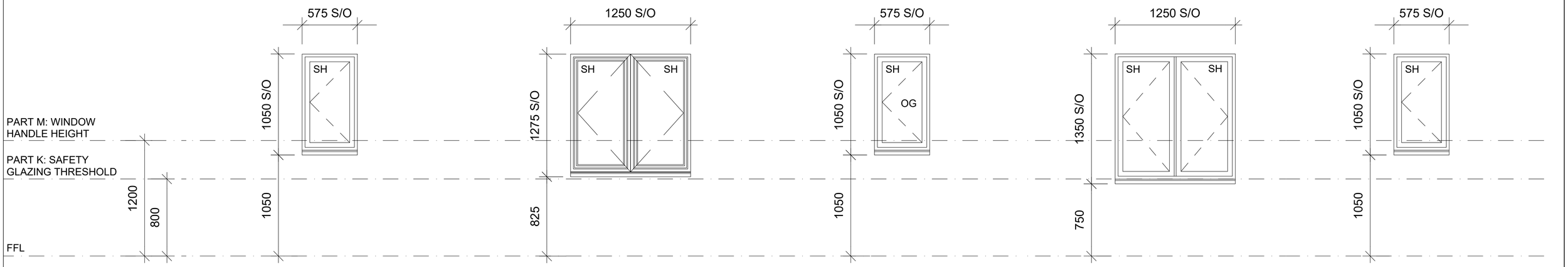

WINDOW TYPE:	NOTES:
W-HT-06	• FFL - TOP OF SCREED • ELEVATIONS BASED ON EXTERNAL FACE ONLY • FRAME HEIGHTS IN ACCORDANCE TAYLOR LANE SPECIFICATION TO ALLOW FOR DIFFERENTIAL SETTLEMENT • STRUCTURAL HEIGHT & WIDTH REFERS TO BRICK WORK STRUCTURAL OPENING ALLOWANCE
STRUCTURAL WIDTH: 575	
STRUCTURAL HEIGHT: 1050	
FRAME HEIGHT: 1025	LEVEL: FIRST

WINDOW TYPE:	NOTES:
W-HT-07	• FFL - TOP OF SCREED • ELEVATIONS BASED ON EXTERNAL FACE ONLY • FRAME HEIGHTS IN ACCORDANCE TAYLOR LANE SPECIFICATION TO ALLOW FOR DIFFERENTIAL SETTLEMENT • STRUCTURAL HEIGHT & WIDTH REFERS TO BRICK WORK STRUCTURAL OPENING ALLOWANCE
STRUCTURAL WIDTH: 1250	
STRUCTURAL HEIGHT: 1275	
FRAME HEIGHT: 1250	LEVEL: FIRST

WINDOW TYPE:	NOTES:
W-HT-08	• FFL - TOP OF SCREED • ELEVATIONS BASED ON EXTERNAL FACE ONLY • FRAME HEIGHTS IN ACCORDANCE TAYLOR LANE SPECIFICATION TO ALLOW FOR DIFFERENTIAL SETTLEMENT • STRUCTURAL HEIGHT & WIDTH REFERS TO BRICK WORK STRUCTURAL OPENING ALLOWANCE
STRUCTURAL WIDTH: 575	
STRUCTURAL HEIGHT: 1050	
FRAME HEIGHT: 1025	LEVEL: FIRST

WINDOW TYPE:	NOTES:
W-HT-09	• FFL - TOP OF SCREED • ELEVATIONS BASED ON EXTERNAL FACE ONLY • FRAME HEIGHTS IN ACCORDANCE TAYLOR LANE SPECIFICATION TO ALLOW FOR DIFFERENTIAL SETTLEMENT • STRUCTURAL HEIGHT & WIDTH REFERS TO BRICK WORK STRUCTURAL OPENING ALLOWANCE
STRUCTURAL WIDTH: 1250	
STRUCTURAL HEIGHT: 1350	
FRAME HEIGHT: 1315	LEVEL: SECOND

WINDOW TYPE:	NOTES:
W-HT-10	• FFL - TOP OF SCREED • ELEVATIONS BASED ON EXTERNAL FACE ONLY • FRAME HEIGHTS IN ACCORDANCE TAYLOR LANE SPECIFICATION TO ALLOW FOR DIFFERENTIAL SETTLEMENT • STRUCTURAL HEIGHT & WIDTH REFERS TO BRICK WORK STRUCTURAL OPENING ALLOWANCE
STRUCTURAL WIDTH: 575	
STRUCTURAL HEIGHT: 1050	
FRAME HEIGHT: 1015	LEVEL: SECOND

DISCLAIMER NOTES:

- THIS DOCUMENT IS COPYRIGHT OF THE ORIGINATOR AND MUST BE TREATED AS CONFIDENTIAL
- THIS DOCUMENT MUST NOT BE ALTERED, REPRODUCED OR DISTRIBUTED WITHOUT PRIOR WRITTEN CONSENT OF THE ORIGINATOR
- THIS DOCUMENT IS AVAILABLE IN BOTH CONTROLLED (eg. pdf) AND UNCONTROLLED (eg. dwg) FORMATS - UNCONTROLLED FORMATS MUST NOT BE ALTERED - THE ORIGINATOR ACCEPTS NO RESPONSIBILITY FOR ANY DISCREPANCIES ARISING AS A RESULT OF THE ORIGINATORS INFORMATION BEING ALTERED BY OTHERS
- ANY DISCREPANCY MUST BE REPORTED TO THE ORIGINATOR
- DO NOT SCALE THIS DOCUMENT - USE FIGURED DIMENSIONS ONLY
- ALL DIMENSIONS MUST BE CHECKED ON SITE PRIOR TO COMMENCEMENT OF ANY RELATED WORKS
- THIS DOCUMENT MUST BE READ IN CONJUNCTION WITH ALL SUPPORTING DOCUMENTS PRODUCED BY THE ORIGINATOR AND OTHER PROJECT DISCIPLINES
- THE ORIGINATOR ACCEPTS NO RESPONSIBILITY FOR THE ACCURACY OF BACKGROUND INFORMATION PRODUCED BY THIRD PARTIES - THIS MUST BE TREATED AS INDICATIVE ONLY
- USERS OF THIS DOCUMENT ARE RESPONSIBLE FOR CHECKING WHICH REVISION IS CURRENT
- THE DOCUMENT STATUS "INFORMATION" OR "PRELIMINARY", INDICATES THAT THIS DRAWING IS FOR REFERENCE PURPOSES ONLY - THE ORIGINATOR WILL ACCEPT NO RESPONSIBILITY FOR THE COMPLETENESS OF INFORMATION UNDER THIS STATUS
- THE DOCUMENT STATUS "RECORD" OR "AS BUILT" HAS BEEN PREPARED, IN PART, BASED UPON INFORMATION FURNISHED BY OTHERS. WHILE THIS INFORMATION IS BELIEVED TO BE RELIABLE, THE ORIGINATOR ASSUMES NO RESPONSIBILITY FOR THE ACCURACY OF THIS "RECORD" OR "AS BUILT" DOCUMENT OR FOR ANY ERRORS OR OMISSIONS THAT MAY HAVE BEEN INCORPORATED INTO IT AS A RESULT OF INCORRECT INFORMATION PROVIDED TO THE ORIGINATOR. THOSE RELYING ON THE "RECORD" OR "AS BUILT" DOCUMENT ARE ADVISED TO OBTAIN INDEPENDENT VERIFICATION OF ITS ACCURACY

DRAWING NOTES:

CDM REGULATIONS 2015
SIGNIFICANT OR NON-OBVIOUS RISKS AND RISKS WHICH ARE DIFFICULT TO MANAGE ARE IDENTIFIED ON THIS DRAWING USING THE FOLLOWING SYMBOL. IDENTIFIED TO THE RIGHT WITH BRIEF ACCOMPANYING TEXT. FOR FURTHER DETAILS OF THE RISKS IDENTIFIED BY DESIGNERS, REFERENCE SHOULD BE MADE TO CDM HAZARD REGISTER

TAYLOR LANE TIMBER FRAME SETTLEMENT GUIDE AS PER TAYLOR LANE DRAWING "TL-U25-13(A)":

- **GROUND LEVEL:** 10mm Tolerance + 5mm Differential movement Allowance= 15mm depth reduction of manufactured joinery item
- **FIRST FLOOR:** 10mm Tolerance + 15mm Differential movement Allowance= 25mm depth reduction of manufactured joinery item
- **SECOND FLOOR:** 10mm Tolerance + 25mm Differential movement Allowance= 35mm depth reduction of manufactured joinery item

Window/Door Code:
W-HT-01 — Window / Door; Type Code; Houses

Opening Styles:
Fixed - Fixed Element
TH - Top Hung Element
SH - Side Hung Element
OG - Obscured Glazing
AOV - Automated Opening Vent

REV	DESCRIPTION	DATE	BY	CHKD
A	Updated Scaling annotation	27/06/2025	LM	JM

CLIENT: EASTLEIGH BOROUGH COUNCIL

IN ASSOCIATION WITH:

PROJECT:
LOWER ACRE,
ONE HORTON HEATH
EASTLEIGH BOROUGH COUNCIL

TITLE:
WINDOW SCHEDULE
HOUSES PAGE 1

DRAWN BY: LM | SCALE: 1:20 @ A1
CHECKED BY: JM | DATE: 02/05/2025
STATUS: CONSTRUCTION
DRAWING No: 5024100-WD-EL-150-A

PROJECT:	ORG:	ZONE:	LEVEL:	TYPE:	ROLE:	NUMBER:	REV:

ORIGINATOR:
RIDGE
PROPERTY & CONSTRUCTION CONSULTANTS

BEAUMONT HOUSE
59 HIGH STREET
THEALE
READING, RG7 5AL
TEL: 0118 932 3088
WWW.RIDGE.CO.UK