UNIQUELY DESIGNED FOR YOUR HOME

Aritco HomeLift
Product catalogue
2025

ARITCO™

Aritco aims to make home lifts a natural part of people's everyday lives.

We believe that the definition of a modern home will change – that modern homes and contemporary living will include home lifts. Our journey started 1995, with the simple idea of improving mobility everywhere. Today, Aritco lifts can be found in over 40,000 buildings and private homes around the world.

Simplicity, quality and innovation are the hallmarks of all Aritco's activities. We are constantly seeking new ways to improve the quality, design and user-friendliness of our products, as well as our environmental impact. Safety and reliability are top priorities, and we follow Europe's strictest quality and safety standards.

All Aritco lifts are developed and produced in Stockholm, Sweden, and we are proud to maintain the highest level of quality in all stages of the process, from design through to final installation in your home.

ARITCO™

This catalogue is primarily made for all our partners around the world. The purpose is to show what Aritco can offer in terms of products, options and possible combinations.

Due to continuous product development, all specifications included in this catalogue are subject to change without prior notice. Reservations are made regarding misprints and articles being out of stock.

CONTENTS

Product summary 4
Lift sizes 6
Lift colour 8
Carrier and DesignWall 10-13
Control panel 14-17
Design Concepts 18
Floor 20
Doors 22
SmartLift 25
DesignLight 26
Lift walls 27
Lift Parts 28
Lift overview, definitions and top floor solutions 30
European standards and safety 32
Drive system and control system 33
Installation 34
Preparations before installation 35
Recommended sales arguments 36
Drawings 38

PRODUCT SUMMARY

Aritco HomeLift is designed to be that extra feature of your home. It is decorative and is a spectacular design feature, which makes your home unique. It provides you with that extra feeling of luxury, and it ignites the full potential of your home.

Type of lift:	Home lift intended for installation in private homes. Only to be used in buildings without public access.
Technical compliance:	European Machine directive 2006/42/EC European standard EN 81-41
Drive system:	Screw and nut system
Installation environment:	Indoor
Travel height:	500-15 000 mm 500-18 000 mm[2])
Top height:	Minimum 2225 mm. Wall extension 2275-4000 mm.
Number of floors:	2 to 6 floors
Installation:	Recessed installation with a 37 mm pit, or installed directly on the floor with a ramp
Control from carrier control panel:	Hold to run – press and hold[1])
Control from call button:	One touch operation
Rated speed (max):	0.15 m/s 0.30 m/s[2])
Carrier sizes and rated load:	S5: 600 x 830 mm 250 kg / 2 pers. S8: 1000 x 830 mm 250 kg / 3 pers. S9: 1100 x 830 mm 250 kg / 3 pers. S12: 1000 x 1200 mm 400 kg / 5 pers. S15: 1100 x 1400 mm 400 kg / 5 pers.

5 YEAR PRODUCT* WARRANTY
*for details see aritco.com

10 YEAR DRIVE TECHNOLOGY* WARRANTY
*for details see aritco.com

1) For installations outside Europe: One touch operation.

2) For installations outside Europe.

Aritco HomeLift

Lift colour
page 8

Top floor solutions
page 25

DesignLight
page 24

Lift walls
page 25

Doors
page 18

Carrier
page 10

LIFT SIZES

S5

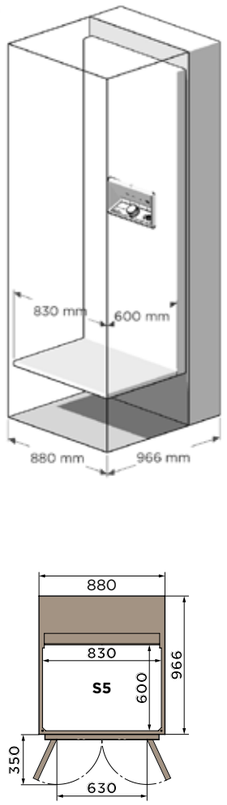

Carrier size: 600 x 830
External dim.: 966 x 880
Rated load: 250 kg / 2 persons

S8

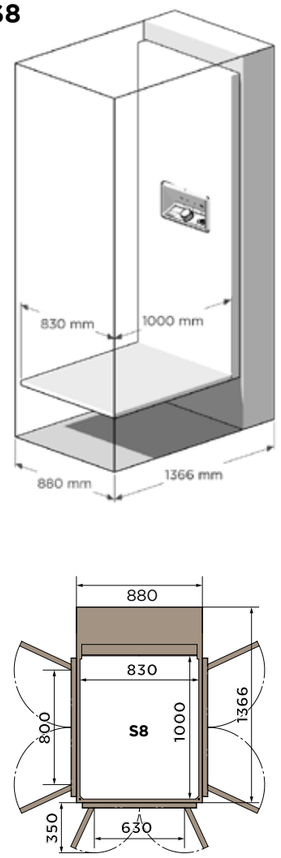

Carrier size: 1000 x 830
External dim.: 1366 x 880
Rated load: 250 kg / 3 persons

S9

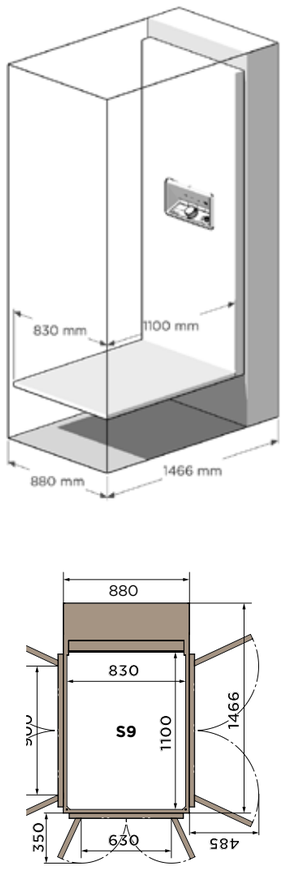

Carrier size: 1100 x 830
External dim.: 1466 x 880
Rated load: 250 kg / 3 persons

(mm)

S12

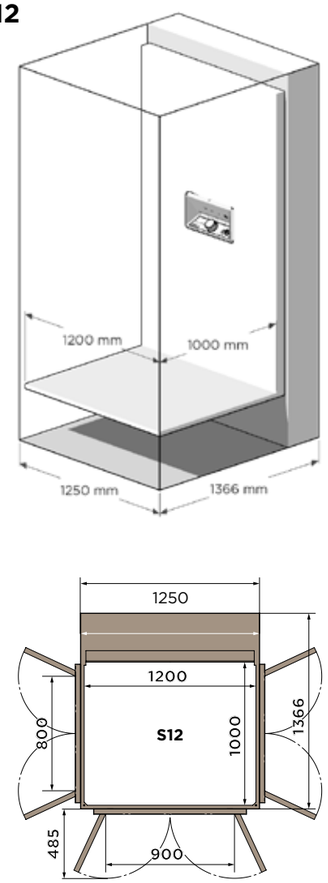

Carrier size: 1000 x 1200
External dim.: 1366 x 1250
Rated load: 400 kg / 5 persons

S15

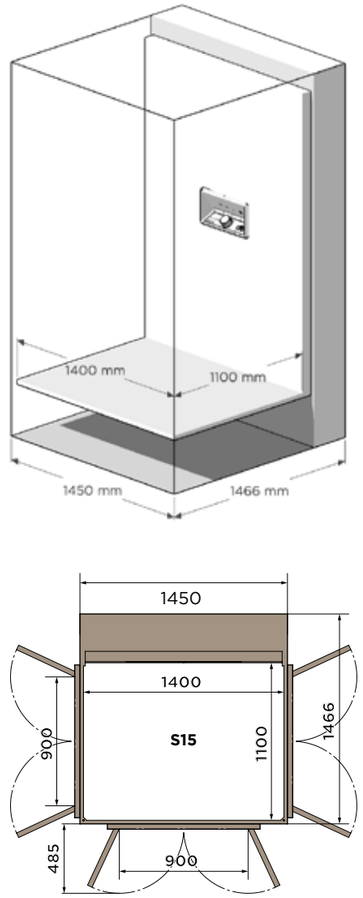

Carrier size: 1100 x 1400
External dim.: 1466 x 1450
Rated load: 400 kg / 5 persons

(mm)

The Aritco HomeLift is available in five different sizes.

Sizes S5, S8 and S9 all have a very narrow mast side, which makes these sizes ideal when space in the home is limited. The larger sizes S12 and S15 are perfect for transporting larger items using the lift and when space is available. Note that the door opening width for S5, S8 and S9 is only 630 mm when you have a soor on B-side.

Carrier size: Inner dimensions of the lift
External dimension: Outer dimensions of the lift (shaft size)
For detailed drawings see page 38.

LIFT COLOUR

The Aritco HomeLift is painted in Traffic White, RAL 9016, as standard.

The paint is a soft-textured powder coat with a matt surface (gloss level 12). The entire lift can be ordered in another colour asan option. It is also possible to order only the doors or walls in a different colour. When another colour is chosen for the doors, all the doors will be supplied in the same colour.

The color Gold (RAL1036) from the dark gold color scale and the Bronze color from the brown-bronze color scale. The colors have a pearl effect, i.e. the glittery particles in the paint make them shimmer, but they do not look like the metals gold or bronze.

Standard:
Entire lift painted in standard Traffic White, RAL 9 016

Full colour option:
Entire lift painted in an optional colour

Wall colour option:
Walls painted in an optional colour

Door colour option:
Doors painted in an optional colour

Gold
RAL1036

Bronze

Traffic white - standard colour
RAL 9 016

Pure white
RAL 9 010

Grey white
RAL9 002

Oyster white
RAL 1 013

Light blue grey
RAL 200 80 10

Light ivory
RAL 1 015

Light sage green
RAL 120 80 20

Champagne
RAL 060 70 10

White aluminium
RAL 9 006

Telegrey 1
RAL 7 045

Moss green
RAL 6 005

Brown red
RAL 3 011

Anthracite grey
RAL 7 016

Jet black
RAL 9 005

Note that the actual colour of the lift may differ from the colour samples pictures.

CARRIER AND DESIGNWALL

The lift's DesignWall features a luxury design unlike any other product in the market – a work of art in its own right. It is possible to make the lift even more spectacular by customising the DesignWall with one of our specially selected patterns or images or select your own personal DesignWall picture.

Cool light

Warm light

CARRIER
The carrier consists of the L-shaped platform and DesignWall. This is the part of the lift that moves up and down when you use it. The lift is controlled from the control panel located in the middle of the DesignWall. You select the desired floor and start the lift by turning and pushing the unique Smart-Control on the control panel. The lighting at the floor of the platform and the control panel is 50 LUX.

DESIGNWALL
The carrier is supplied with a 2 000 mm high side wall called the DesignWall, which takes its name from its elegant and unique design. The DesignWall is delivered with hard-coated, scratch-resistant acrylic glass with a white background as standard. It is backlit with a white LED light. It is possible to make the lift even more spectacular by customising the DesignWall with one of our specially selected patterns or images.

All the DesignWalls are backlit with an eye-catching white LED light. The DesignWall is delivered with a white background as standard. To make the lift into a real piece of art we have collaborated with a number of eminent Scandinavian artists and designers to create stylish patterns and images as options for the DesignWall. The current options are presented on the next page.

The white light in the DesignWall can be switched between cool and warm light via the SmartApp. The light temperature can be set between 2700-6500 K and this will give the homeowner the possibility to select the light temperature that fits best in his/her home as well as fits best with the DesignWall picture.
Note that the DesignWall will be in a backlit light box and may therefore appear different from the pictures. This can affect the color, contrast and sharpness of the picture.

PERSONAL DESIGNWALL PICTURE
It´s also possible for the homeowner to select his/her own personal DesignWall picture. You will be able to order the DesignWall with personal picture together with the lift in our ordering system AOS. In AOS you can read more about the special rules for size and quality of the picture, procedure how to upload the print file, the file where we can see which part of the picture that should be printed. There will also be some limitations on which picture we will allow, for instance we will not print offensive material and religious symbols.

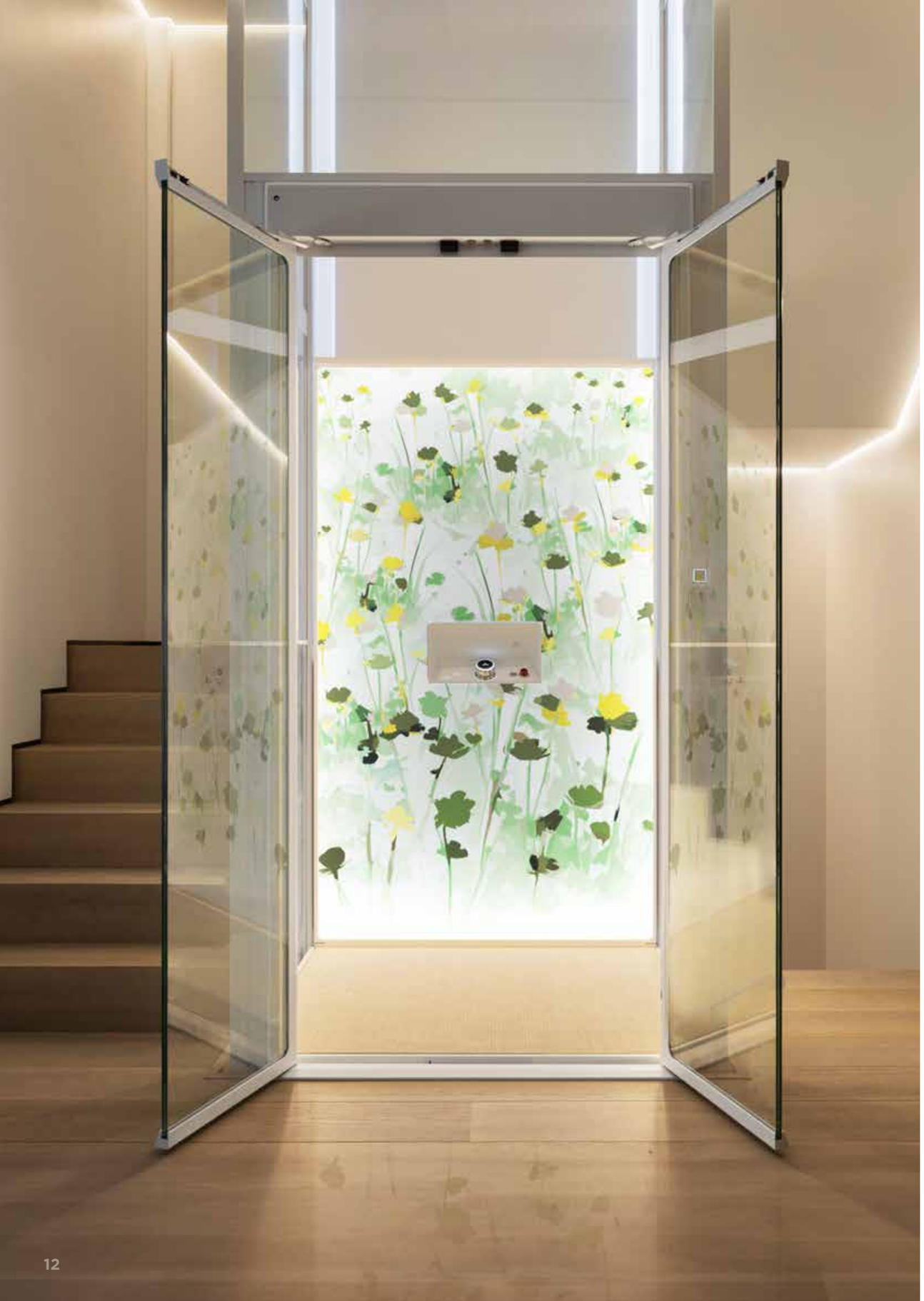

Stockholm
Alexander Lervik

Abu Dhabi
Alexander Lervik

Berlin
Alexander Lervik

Shanghai
Alexander Lervik

Skyline
Erik Undéhn

Sheets
Rikard Lilja

Structure
Rikard Lilja

Key West
Erik Undéhn

Pink
Lotta Ingman

Orange
Lotta Ingman

Diagonal
Alexander Lervik

Orientalic
Alexander Lervik

Geometric Blue
Evelina Kroon

Geometric Classic
Evelina Kroon

Geometric Pink
Evelina Kroon

Standard

CONTROL PANEL

The control panel is placed in the middle of the DesignWall, and is used to control the lift.

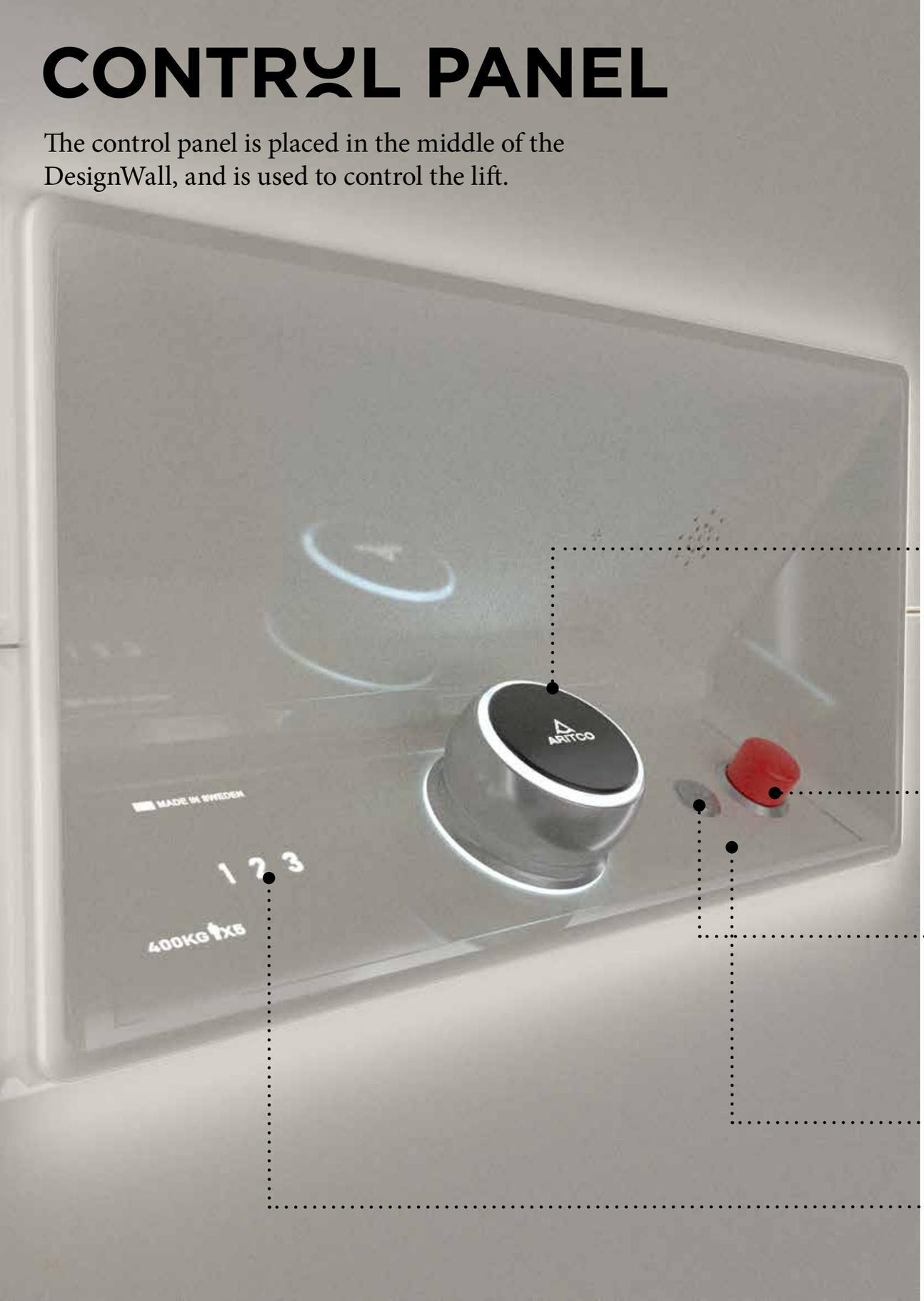

CONTROL PANEL COLORS
The control panel is in standard Traffic White (RAL9016), but can be delivered in the optional colors, Anthracite Grey (RAL7016), Gold (RAL1036) and Bronze.
The control panels in Traffic White and Anthracite Grey are colored plastic and the Gold and Bronze ones are painted. The Gold color is from the dark gold color scale and the Bronze color from the brown-bronze color scale. The colors have a pearl effect, i.e. the glittery particles in the paint make them shimmer, but they do not look like the metal gold or bronze.

Traffic White
RAL9016

Anthracite Grey
RAL7016

Bronze

Gold
RAL1036

SMARTCONTROL
The SmartControl is a unique way of controlling the lift that has been specially developed to be more user-friendly and ergonomic than standard lift buttons. It comprises a stainless steel ring, which is turned to select a floor. The plastic top part is pressed to start the lift.

Turn counterclockwise to select a lower floor, i.e. to go down.

Turn clockwise to select a higher floor, i.e. to go up.

EMERGENCY STOP BUTTON
The emergency stop button is designed for use in emergency situations. When the button is pressed, the lift stops. The button is reset by twisting it.
A backlit arrow indicates that the emergency stop function is activated. The white light will blink until the button is reset.

ALARM BUTTON AND EMERGENCY CALLS
In accordance with EN81-41, two-way communication is mandatory for safety reasons. An autodialer that can be used to make emergency calls can be ordered as an option.
The alarm button is connected to the autodialer. When the alarm button is pressed for 10 seconds, the autodialer automatically calls the first telephone number in the list of pre-programmed numbers. The numbers are programmed when the lift is installed. If the first call is not answered after a pre-defined time, the autodialer will automatically call the next number in the list.
The autodialer is connected to the fixed PSTN line as standard. It can be supplied with a GSM module as an option. The SIM card is not supplied by Aritco.

Yellow light indicates that the alarm button has been pressed for more than 10 seconds.

Green light indicates connection.

CONTROL PANEL SYMBOLS

CONTROL PANEL

FLOOR INDICATOR
The floors are indicated on the control panel with the signs, -3,-2,-1, 1, 2, 3, 4, 5, 6 and F.
The following combinations are available:

The numbers are backlit using a white light, which tells you which floor you are currently on and which floor you have chosen to go to. The current floor is indicated with 100 % brightness, while the other floors are indicated with 50 % brightness.

2 floors	3 floors	4 floors	5 floors	6 floors
1, 2	1, 2, 3	1, 2, 3, 4	1, 2, 3, 4, 5	1, 2, 3, 4, 5, 6
-1, 1	-1, 1, 2	1, 2, 3, F	1, 2, 3, F, 5	1, 2, 3, F, 5, 6
-2, -1	-2, -1, 1	-1, 1, 2, 3	-1, 1, 2, 3, F	-1, 1, 2, 3, F, 5
-3, -2	-3, -2, -1	-2, -1, 1, 2	-2, -1, 1, 2, 3	-2, -1, 1, 2, 3, F
		-3, -2, -1, 1	-3, -2, -1, 1, 2	-3, -2, -1, 1, 2, 3

RATED LOAD, MAXIMUM NUMBER OF PERSONS AND OVERLOAD
The control panel features symbols indicating the rated load and maximum number of persons that the lift is designed for. When the lift is loaded with a heavier load than it is rated for, the rated load symbol will flash red. It is not possible to use the lift when it is overloaded.

KEY – FOR LOCKING THE CONTROL PANEL
It is possible to lock the control panel to prevent the lift from being used. A key symbol indicates whether or not the lift is locked. The lift can still be called from another floor when locked and is lit until the lock is turned off.

Locking the lift: Turn the SmartControl counterclockwise until the key symbol is shown. Then press and hold the SmartControl for five seconds. A second key symbol will then light up (red light) next to the max. weight symbol. This symbol indicates that the lift is locked.
To unlock the lift: Turn the SmartControl counterclockwise until the key symbol is shown. Press and hold the SmartControl for five seconds. The red key symbol will turn off, indicating that the lift is no longer locked.

SERVICE SYMBOL – INDICATES THAT THE LIFT REQUIRES SERVICING
If the lift is connected to Artico SmartLift Fleet and has the service indicator feature activiated the symbol will go on when it's time for service.

STATUS SYMBOL – INDICATES THE STATUS OF THE LIFT
The status symbol indicates the status of the lift. When the symbol is not lit, this indicates that the lift is working normally. When lit, the symbol indicates a fault with the lift. A yellow light indicates a minor fault, while a red light indicates a serious fault that must be reset by service personnel.

FIRE SYMBOL – INDICATES A FIRE
The lift can be connected to the building's fire alarm system.
If there is no fire, the fire symbol remains off. In the event of a fire, the fire symbol turns red. In the event of a fire, the lift will automatically travel to the floor pre-defined by the homeowner.

DESIGN CONCEPTS

by Alexander Lervik

Four design concepts designed by Alexander Lervik, named after larger cities in Scandinavia, Europa, Asia/China and Middle East, globally valid and with a touch of the region the city is located in. Each design concept with predefined DesignWall and DesignPanel patterns, lift and control panel colors and flooring.

Design concept Berlin
Berlin is a dynamic city in Europa with a rich history and thriving art and design scene. It´s known for its creativity, alternative culture and innovative architecture.

Berlin is for me the Cultural capital of Germany. Is the city in the world that offers the greatest contrasts in its urban environment. From the exclusive streets with well-kept houses to the run-down streets with plaster falling off the houses. And in the middle of all this an explosion of culture, life and creativity. These variations inspired to the pattern for the Berlin DesignWall and to the concrete pattern on the DesignPanels.
- Alexander Lervik

Design concept Abu Dhabi
The capital of the United Arab Emirates and a city that is growing rapidly. It has an exciting mix of traditional Arabic architecture and modern buildings.

The Abu Dhabi design concept convey a sophisticated and luxurious feel and the whole concept is inspired by the gold color scale. The lift is painted in a gold shade scale color with pearl effect. The traditional Persian patterns have inspired me when I created the DesignWall pattern.

- Alexander Lervik

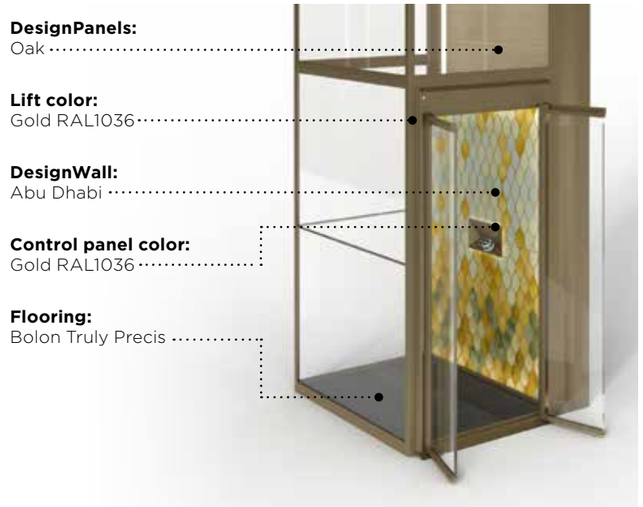

Design concept Stockholm
Stockholm is known for its Scandinavian design, often characterized by simplicity, functionality, and elegance.

Stockholm is my Hometown. A city where Nature and urban places meet and grow into each other. Near the house where I grew up there is a flower meadow that is in full bloom just in time for midsummer. There I found the inspiration for the pattern of the new DesignWall. The DesignPanels are inspired by the Scandinavian forest and pine trees.

- Alexander Lervik

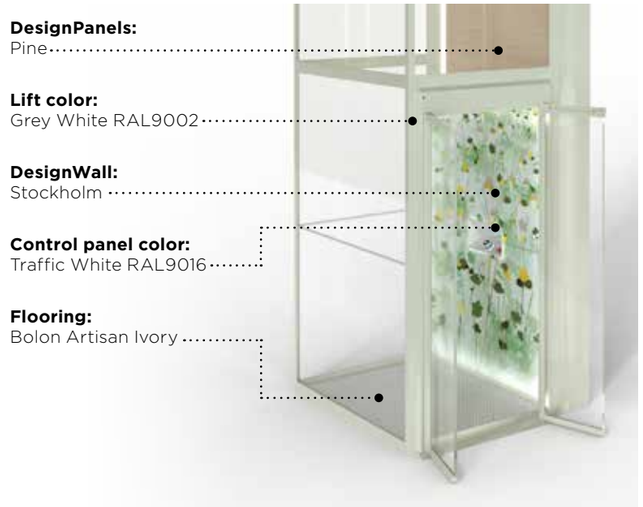

Design concept Shanghai
Shanghai is a vibrant city in China that combines traditional Chinese culture with modernity. It´s known for its skyscrapers, futuristic architecture, and vibrant street life.

My first visit in Shanghai inspired me to the pattern for the Shanghai DesignWall. The city has all these fantastic patterns in houses, street windows and you find new ones wherever you go. The brown-bronze color scale is also reflected in the overall color scheme of the lift.

- Alexander Lervik

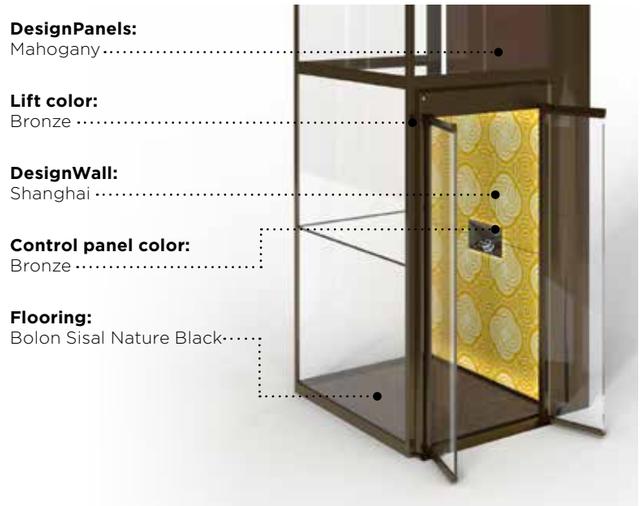

FLOOR

High quality PVC floor made in Sweden – Bolon Sisal Plain Sand

The carrier is supplied with a stylish, high quality floor from popular Swedish company Bolon. The standard floor is Bolon Sisal Plain Sand. As an option, another floor can be ordered from our carefully selected assortment. It is also possible to order the lift without a floor, which enables the homeowner to choose and fit their own floor. The maximum thickness of an externally selected floor is 5 mm.

Choose from our selection of high quality PVC floors made in Sweden by Bolon, or our dense, attractively-textured nylon carpets in solid modern colours to match your home's interior design.

Bolon Sisal Nature Black (Option)

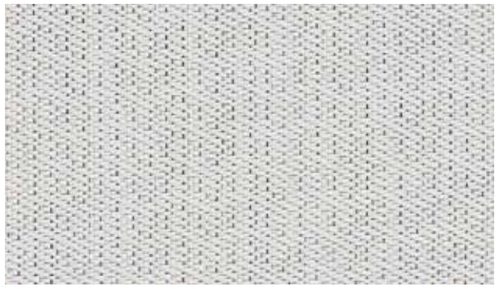

Bolon Artisan Ivory (Option)

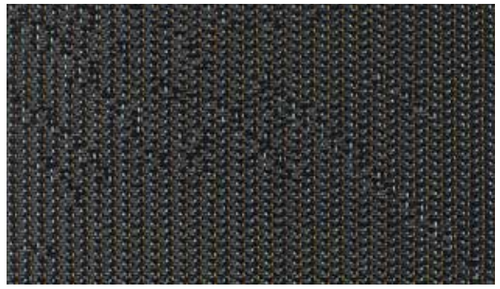

Bolon Truly Precis (Option)

Bolon Graphic Gradient (Option)

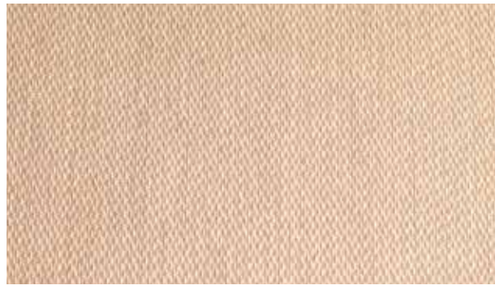

Bolon Sisal Plain Sand (Standard)

Bolon Flow Stream (Option)

Carpet Chianti (Option)

Carpet Camel (Option)

Carpet Elephant (Option)

ARITCO™

DOORS

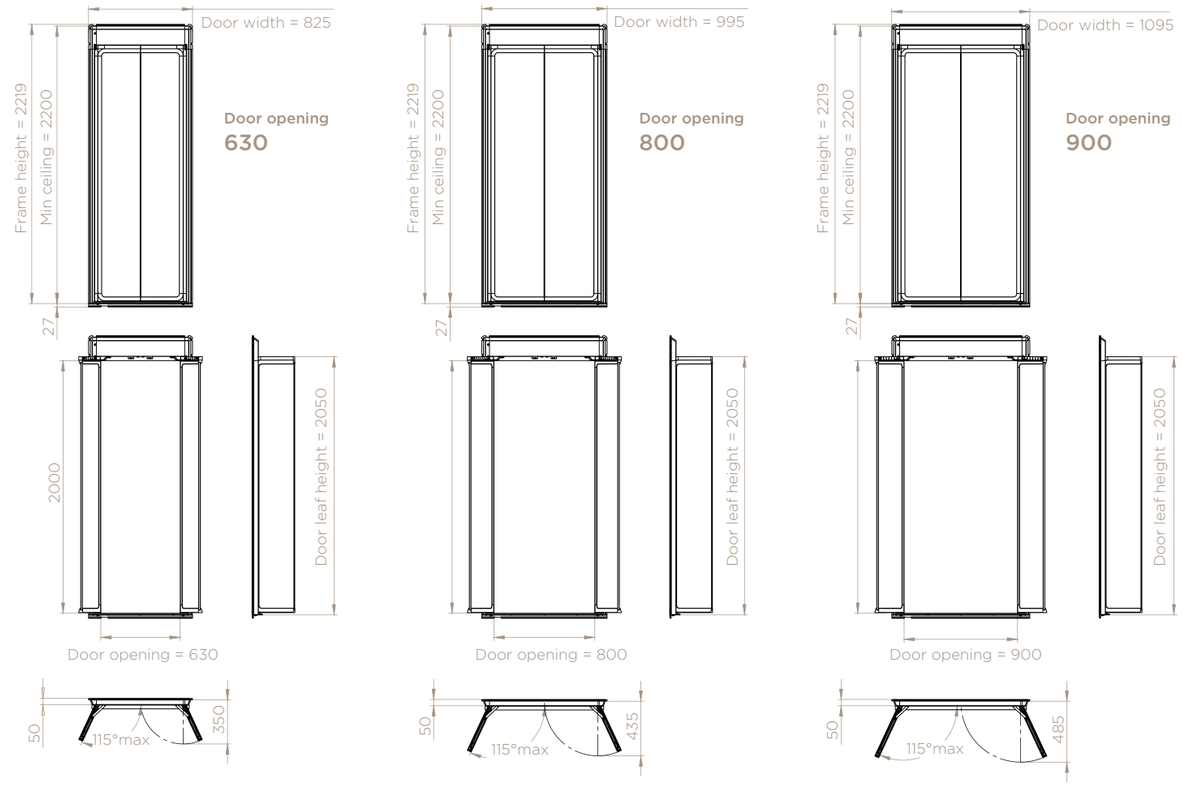

The doors installed in the lift walls at each floor are double doors, i.e. two leaves with a central opening. The door leaves are made of glass with painted profiles.

Door opening height: 2000 mm
Door opening width: 630 mm, 800 mm or 900 mm depending on the lift size and on which side of the lift the door is placed. See the drawings on pages 32-33 for further details.

GLASS
Our door leaves are made of toughened and laminated glass. Clear glass is supplied as standard, while tinted glass can be ordered as an option.

DOOR CONTROL
The door frame of each door features a call button, which is used to call the lift. The call button is mounted in a case painted in the same colour as the walls; the button is stainless steel and features a backlit frame (white light) that provides information about the lift:

- The light is off – the lift is in standby mode and is not currently being used.
- White light – the lift has been called.
- Flashing white light – the lift is occupied (or out of order).

DOOR OPENERS
Two internal door openers are integrated in the door frame. These open and close the door leaves automatically and simultaneously. It is possible to set the speed at which the doors open, the time for which the doors remain open, and the opening angle of the doors.

The door openers feature collision intelligence and can sense if an obstacle is in the way. If a door hits something while in motion, the doors automatically reverse. The door then tries to complete the motion again, passing slowly at the location where it previously encountered the obstruction. This is to ensure that the object that was previously in the way has been removed, and to reduce the force.

EXTENDED DOOR OPENING TIME
When extra time is needed to get things in or out of the lift, it is possible to extend the time that the doors remain open. Just press the call button for five seconds to extend the time that the doors remain open. The default time is 120 seconds, and it it is possible to set the open time to up to 300 seconds. When the extended door opening time is activated, the lift cannot be called from another floor until the doors have closed again. When the extended door opening time is activated, the call button will flash.

DOOR SILLS
The door sills are painted in the same colour as the doors.

DOOR LOCK
An electrical door lock is located in the door frame.

Clear glass

Tinted glass

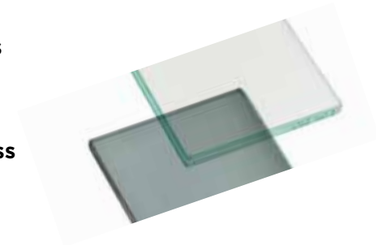

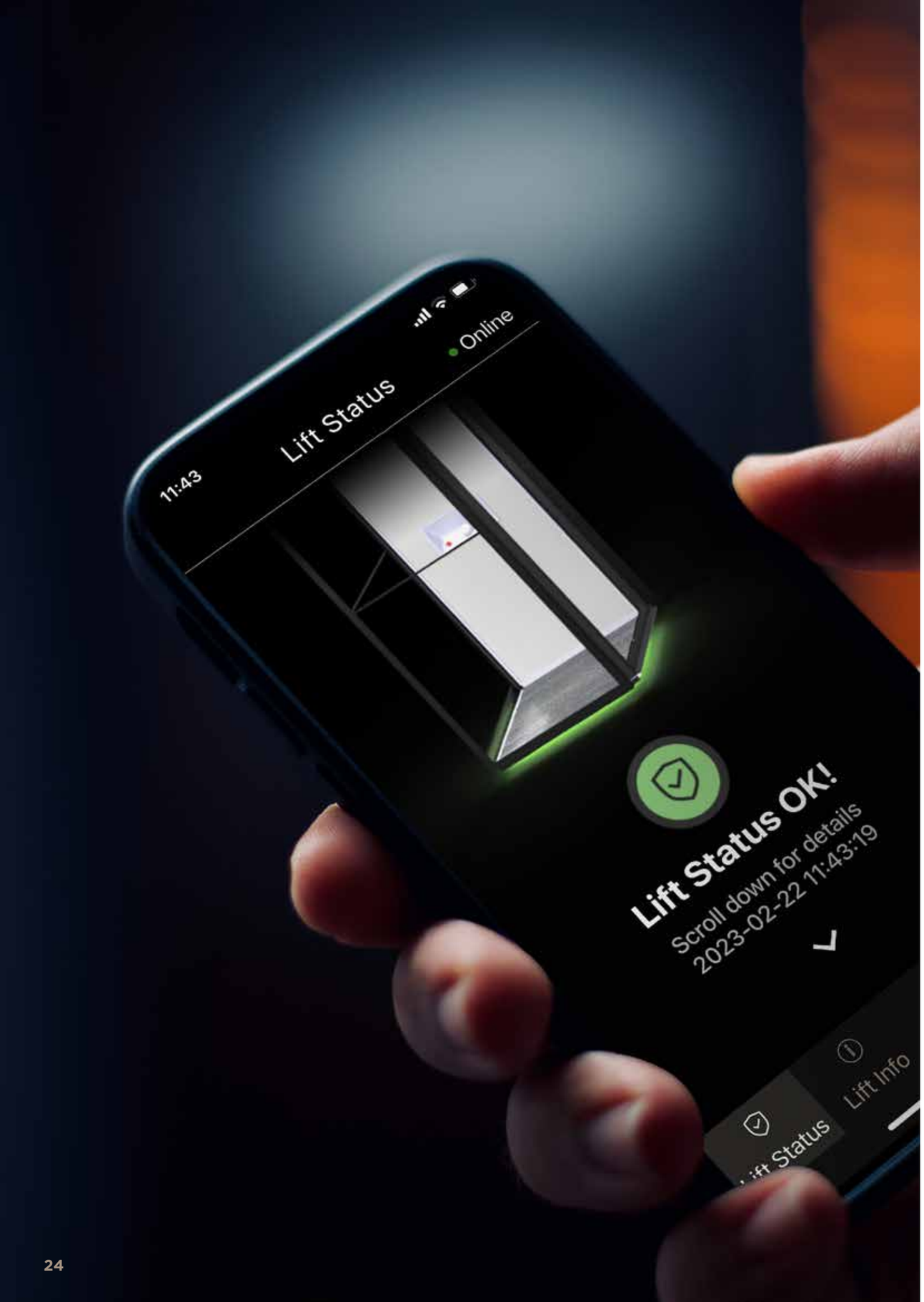

Aritco SmartLift

Aritco HomeLift is connected. Via the Aritco SmartApp the user get valuable information about the status of the lift and when the lift needs service. The App in combination with a service contract and Aritco SmartFleet will improve the service and attention that you as a partner can offer to your customers, as well as making your life easier.

The Aritco SmartApp and Aritco SmartFleet will continuously be updated with new features and functionality.

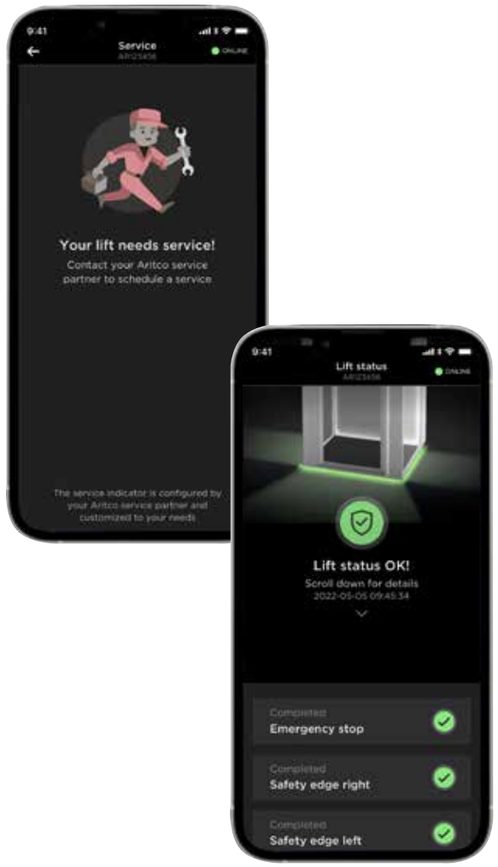

Aritco SmartAPP
Via the Aritco SmartApp the user gets valuable information about his/her lift and can make personal settings.

- Safety status
- Service indicator
- Lift usage statistics
- Lift information
- Child Lock
- Floor Lock (Beta)
- DesignLight
- Speed configuration
  (For installations outside Europe:)

Aritco SmartFleet
Aritco lifts are seamlessly connected to the Aritco SmartFleet platform allowing for 24/7 monitoring. With access to real time data from the lift you are immediately informed if there is a problem. With instant alarm notifications, remote monitoring and configuration in Aritco SmartFleet, troubleshooting can be done more efficiently.

Aritco SmartFleet reduce the risk of breakdowns by tracking usage patterns and lift status over time. The platform increases safety, durability and accessibility of the lift, leading to higher customer satisfaction. Improved efficiency in maintenance planning, troubleshooting and support activities can cut workload for maintenance companies.

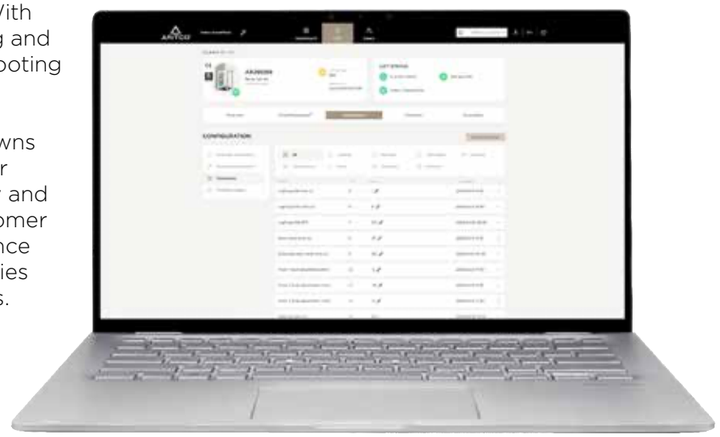

KEY FUNCTIONALITIES
- Remote monitoring
- Alarm notification
- Status and usage reporting
- Live lift status
- Configuration of parameters
- Remote update of softwareand total runtime

DESIGNLIGHT

Home lighting is one of the most important factors in achieving an interior with a cohesive vision.

Lighting in our homes can bring beauty into our interior surroundings. The state-of-the-art design of the lighting in the Aritco HomeLift has been developed by Sweden's leading lighting architects.

DESIGNWALL
The acrylic glass DesignWall is backlit with a white light. The white light in the DesignWall can be switched between cool and warm light via the SmartApp. The light temperature can be set between 2700-6500 K.

DESIGNLIGHT COLOUR
The lift is delivered with white lighting as standard. The lift can be delivered with coloured (RGBW) lighting as an option. Note that the DesignWall is always delivered with a white light.

WALLS
Indirect lighting illuminates the lift's interior walls. The light source is hidden behind the lift's covering panels, and runs along both sides of the lift, from bottom to top. White lighting is supplied as standard. The white light can be switched between cool and warm light (light temperatures between 2700-6500K) via the SmartApp. Coloured (RGBW) lighting may be ordered as an option.

Cool light

Warm light

CEILING
Indirect lighting illuminates the ceiling inside the lift. White lighting is supplied as standard. The white light can be switched between cool and warm light (light temperatures between 2700-6500K) via the SmartApp. It is possible to order the lift with coloured lighting (RGBW) as an option.

LIGHTING CONTROL
The DesignLight can be controlled and adjusted using the user-friendly Aritco SmartApp, or via the service panel.

LIFT WALLS

The lift is always delivered with self-supporting walls that enclose the carrier. The walls are visible from both inside the lift and from outside the lift, from the room.

The walls are constructed using an ingenious system that makes it possible to freely mix solid wall panels and glass wall panels. All the panels are of the same thickness (10 mm) and same height. The walls are fitted together without visible screws.

WALL COLOUR
The walls are painted in Traffic White, RAL 9016, as standard. This includes all the wall parts – the wall panels, profiles, cable ducts, corner profiles, covering panels and backside covering, etc.

If the walls are ordered in an optional colour, all the wall parts will be painted in this colour.
For further details, see the 'Lift colour' chapter on pages 8-9.

GLASS WALL PANELS
Glass wall panels can be ordered as an option. The glass panels are made of 10 mm thick toughened and laminated glass. The glass panels are available in clear glass and tinted glass in the following heights:

- Standard height: 1060 mm
- Extended height: 2120 mm
- Custom height: between 250 mm and 2200 mm

The clear glass panels can as an option be ordered with patterns. Two patterns are available.
Diamond pattern in Grey White (RAL9002)
Mesh pattern in Gold (RAL1036)
When ordering a lift with one of the above patterns all wall panels will be delivered with the pattern. Note that the pattern will not be delivered on the door glass or the door glass side panels.

Mesh

Diamond

LIFT PARTS

WALL PANELS
The standard walls are delivered with wall panels composed of steel plates with an EPS (polystyrene) core. The standard height of the wall panels is 1060 mm. The panels can be cut upon installation to ensure a perfect fit.

WALL PANEL PROFILE
A thin H-profile is used between the wall panels. The same profile is used for both solid wall panels and glass wall panels.

COVERING PANELS
The inside of the machine side is covered with covering panels. The panels are supplied as standard and cover the mast, drive screw and other components so that they cannot be seen. The panels are made of steel and delivered in the same colour as the rest of the lift walls.

DESIGNPANELS.
The covering panels can as option be customized and covered with a plastic film that makes them look like either wood (Pine, Oak or Mahogany) or concrete. Page 31

WALL CORNERS
The wall corners are made of painted aluminum. Inside the lift the corners are covered to hide screws and fittings.

CABLE DUCTS
When installing the doors on the B-side, cable ducts are installed on the A-side or C-side. The cable duct is used to run cables from the doors on the B-side to the back of the lift.

DOOR SIDE PANEL
For lift sizes S12 and S15 with the doors on the B-side, door side panels are installed to cover the space between the door frame and wall corners.
As standard the lift is delivered with steel panels. For the largest platform size S15 and when having a door on the B-side (1400 mm side) it´s possible to order the lift with glass door side panels in clear or tinted glass as an option.

CEILING
The ceiling is supplied with a white LED light as standard, and can be ordered with a coloured (RGBW) light as an option. The LED lights create light patterns in the ceiling and the standard pattern is called Stars, as option the lift can be ordered with pattern Sphere or ordered without a ceiling. The ceiling is painted in the same color as the lift. Note that if the lift roof is visible from above and the lift is ordered in another color than standard white, it´s possible to order the lift roof in the same color as the lift. Page 30

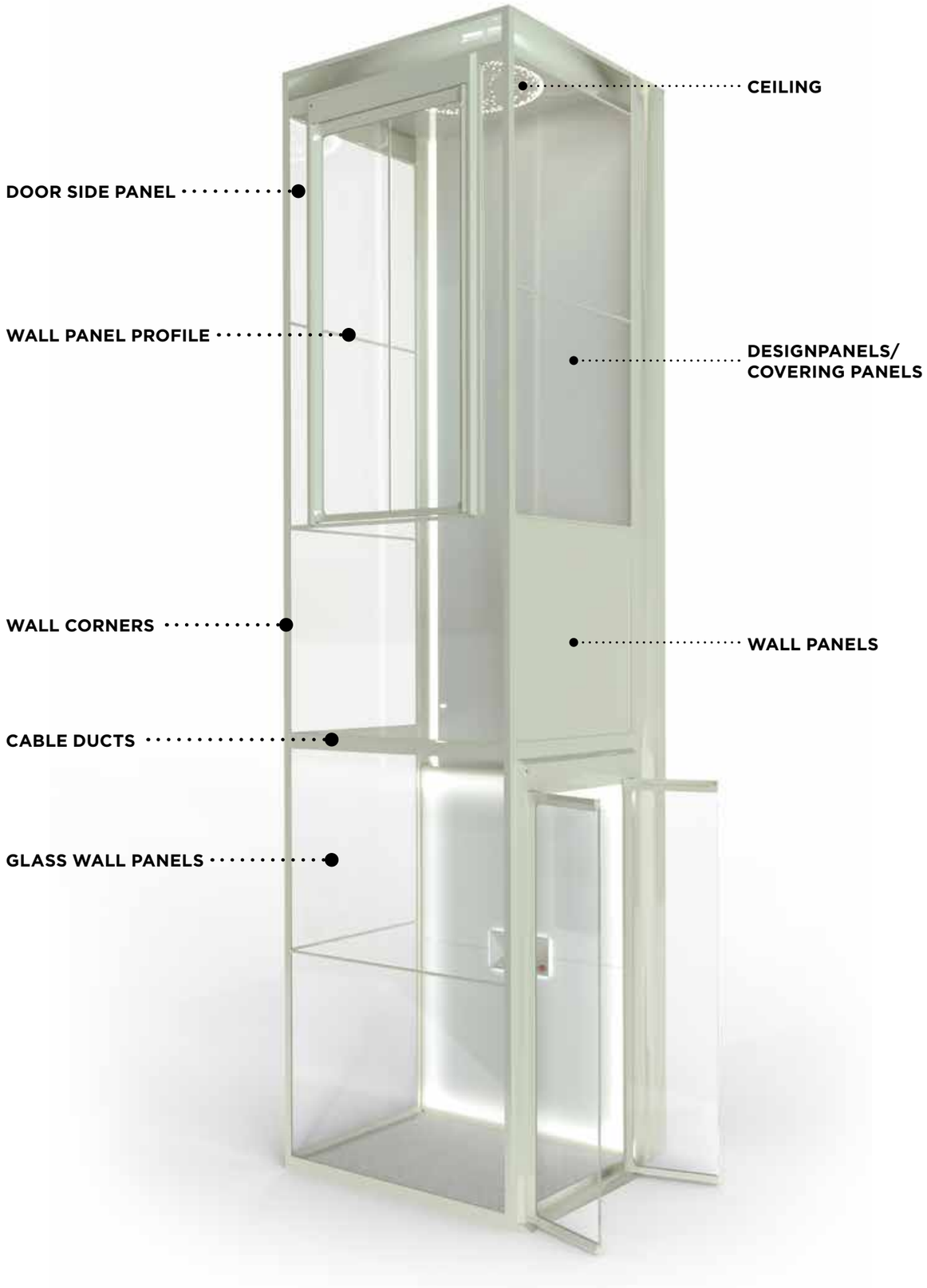

LIFT PARTS

CEILING
The ceiling is supplied with a white LED light as standard, and can be ordered with a coloured (RGBW) light as an option. The LED lights create light patterns in the ceiling and the standard pattern is called Stars, as option the lift can be ordered with pattern Sphere or ordered without a ceiling. The ceiling is painted in the same color as the lift. Note that if the lift roof is visible from above and the lift is ordered in another color than standard white, it´s possible to order the lift roof in the same color as the lift.

Open ceiling

Stars

Sphere

DESIGNPANELS.
The covering panels can as option be customized and covered with a plastic film that makes them look like either wood (Pine, Oak or Mahogany) or concrete.

Concrete

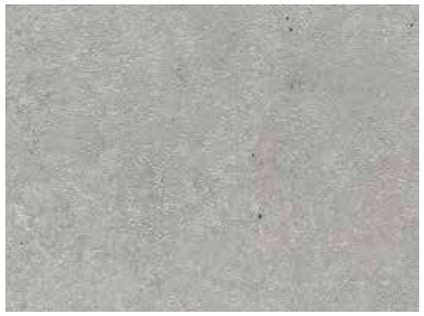

Oak

Pine

Mahogany

LIFT OVERVIEW, DEFINITIONS AND TOP FLOOR SOLUTIONS

TOP HEIGHT
The height from the floor on the top floor to the top of the lift walls (minimum 2 225 mm).

- Wall extension: Top floor height 2 275 - 4 000 mm
- Recommended top height when having a ceiling and glass wall panels is 2 350 mm. So that you can´t see the LED lights in the ceiling through the glass wall panels.
- Recommended top height when having wall panels (non-glass) is 2 275 mm. It is much easier to get a good looking finish if you end the walls (shaft) at this height.

WALL EXTENSION
The standard height of the walls on the top floor is 2 225 mm. It is possible to order a wall extension to enable the walls to reach the ceiling of the building on the top floor. The wall extension can be ordered in millimetre increments to reach a top height of 2 225 mm and 2 275-4 000 mm.

TRAVEL HEIGHT
The height from floor level on the ground floor to floor level on the top floor. The distance that the lift can travel.

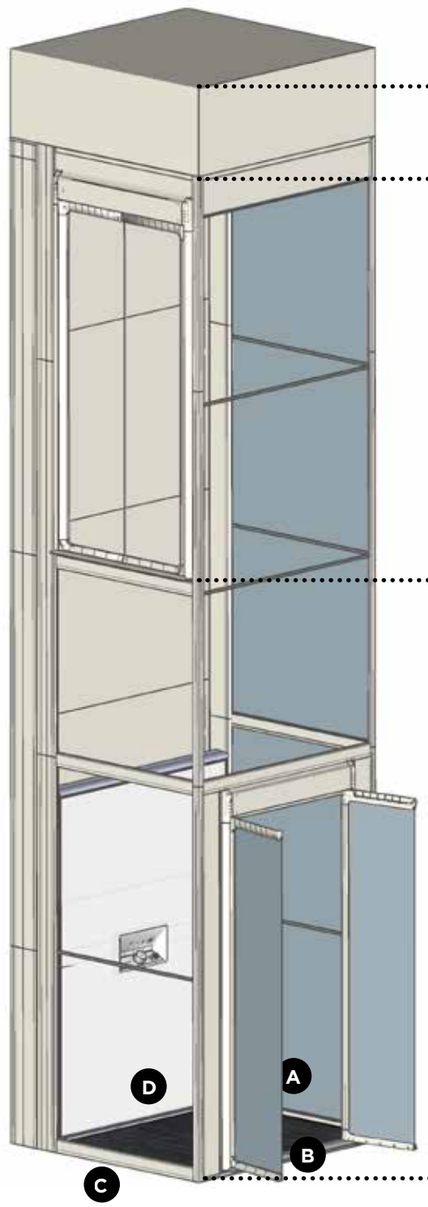

Top floor
(2nd floor)

Wall extension
(50-1775 mm)

Top height
(2 225 mm,
2 275-4000 mm)

Minimum top height
(2 225 mm)

Travel height

A, B, C. D-side of the lift

Bottom floor
(1st floor)

EUROPEAN STANDARDS AND SAFETY

The Aritco HomeLift complies with the European Machine Directive 2 006/42/EC. The lift follows with the safety aspects of the platform lift standard EN81-41. The drive system is not covered by the standard and is separately examined.

European Standard EN81-41:2 010: Safety rules for the construction and installation of lifts – Special lifts for the transport of persons and goods. The lift is type approved. Following installation the lift is CE marked.

SMARTSAFETY SYSTEM
The Aritco HomeLift system is designed with a focus on safety and reliability in order to anticipate and prevent all hazardous situations that may occur in the home. Small children will play inside and outside of the lift, and smart doors and safety sensors will prevent their fingers from being trapped and injured. The lift's drive system is a thoroughly-tested and reliable system with a screw attached to the DesignWall, which drives the lift up and down.

1. **Smart doors.** The integrated door openers feature collision intelligence, and can sense if an obstacle is in the way. If a door hits something while in motion, the doors automatically reverse. The door then tries to complete the motion again, passing slowly at the location where it previously encountered the obstruction. This is to ensure that the object that was previously in the way has been removed, and to reduce the force.
2. **Emergency operation.** Electrical emergency operation is included for all lifts. In the event of an emergency (in accordance with EN81-41) it is possible for an authorised/competent person to lower the lift to the nearest landing (from the service panel outside the lift). The emergency operation speed is 0.8 m/min.
3. **Control system battery monitoring function.** All lifts include a battery monitoring function in the control system. The smart battery guard ensures that the batteries are not discharged if you turn off the lift, or the power supply is unstable.
4. **Safety edges.** Safety edges are located around the carrier floor and at the top of the DesignWall. The safety edges ensure that it is not possible for an object to become trapped between the moving carrier and the walls (shaft). If something should come between the carrier and the walls (shaft), the lift will stop.
5. **Key – locking the lift.** It is possible to lock the control panel to prevent the lift from being used. A key symbol indicates whether or not the lift is locked.
6. **Drive system.** The drive system is a thoroughly-tested and reliable system, with a screw and nut attached to the DesignWall that drives the lift up and down. The system also features dual safety brakes and a battery-driven lowering system, so you are always able to get out of the lift, even in the event of a power failure. For Aritco, it is natural to follow the most stringent safety requirements and directives!

DRIVE SYSTEM AND CONTROL SYSTEM

DRIVE SYSTEM
The Aritco HomeLift has a unique screw and nut drive system that has been specially developed and adapted to the requirements of a home environment; it is silent and smell-free, smooth-running with a soft start and stop, takes up little space and is cost-effective. The frequency control ensures that the lift has a smooth start and stop.
The screw is fixed to the top of the mast, and when the nut turns the lift moves (via a motor and belt). A safety nut is installed below the drive nut for extra safety. The lift is equipped with electromagnetic dual safety brakes and an electronic over-speed governor, which prevents the lift from descending with excessive speed or in free-fall.

RATED SPEED
Rated speed max. 0.15 m/s.

• 1-phase 230 V

Rated load	Fuse
250 kg	1x10A Type C
400 kg	1x13A Type C

Rated speed max. 0.3 m/s. For installations outside Europe only.

• 3-phase 400 V

Rated load	Fuse
250 kg	3x10A Type C
400 kg	3x10A Type C

LUBRICATION
Automatic lubrication is included as standard. Pump based system that provides a constant oil flow on the drive screw.

MAST
The lift (including the drive screw) is always delivered in parts. This makes transport and installation easier and more cost-effective. Parts are never longer than 2 300 mm.
The guides have corrosion class C5 and are made of Magnelis. Magnelis is a metal coating with 3% Magnesium, which gives it a very high corrosion resistance.

CONTROL SYSTEM
Micro-controller based control system. System bus: Controller Area Network (CAN) @ 50 kbit/s. The system is based on a CAN-bus multi node architecture with load controller modules. Each module is responsible for a specific task and operation. The main controller module is located behind the DesignWall for easy access. For local control, change of settings and runtime data a service panel is located on or close to the lift.

INSTALLATION

Make sure that the entire installation is made in an indoor environment.

RECESSED INSTALLATION (WITH A PIT) OR DIRECTLY ON THE FLOOR
The lift can be installed 37 mm below the floor level in a so-called recessed installation with a pit. This enables the lift carrier floor to be flush with the floor of the house on the bottom floor (only with 13 mm door sill). If it is not possible to make a 37 mm pit in the floor, the lift can be installed directly on the floor. When the lift is installed directly on the floor, the lift carrier floor will be 50 mm higher than the floor of the house. A ramp to put in front of the lift can then be ordered as an option.

BACKSIDE COVERING
When the lift is not installed against a wall and the back of the lift is visible, a backside covering can be ordered as an option to cover the back of the lift. The backside covering is made of steel and painted in the same colour as the rest of the lift walls.

MAST BRACKET
When the lift is not installed and fixed directly on the machine side (against a wall, staircase or equivalent), mast brackets can be used to fix the lift. The mast brackets make it possible to install the lift even if the fixing points are on the A, B and C sides. Note that the mast bracket will be installed on the outside of the lift and will take up extra space. For exact dimensions see site preparation manual and installation manual.
The mast brackets are painted in the same colour as the lift walls.
There are three different mast bracket solutions, depending on how you fix the lift;

1. A solution for when you fix the lift on the A or C-side.
2. A solution when you fix the lift on the B-side.
3. A start profile that you fix on the machine side of the lift and that can be used as a start when you build your own fixing.

1)

2)

3)

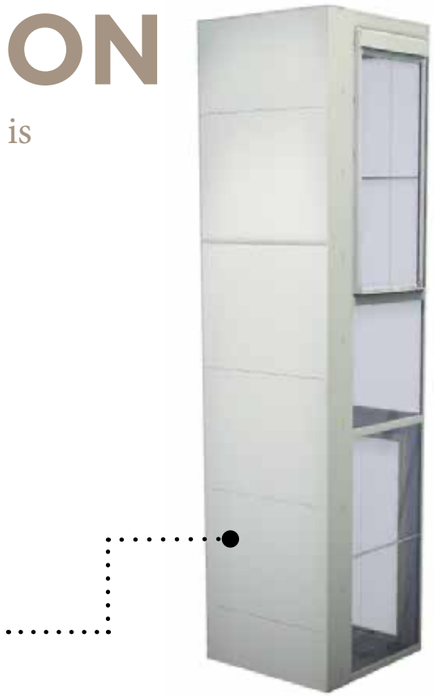

TOP HEIGHT AND MINIMUM BUILDING CEILING HEIGHT
Note that for installation reasons the celling height of the building must be a minimum of 30 mm higher than the top height of the lift.

MINIMUM DISTANCE BETWEEN TWO FLOORS
The minimum distance between two floors is 110 mm. When the doors are placed on the same side on both floors the minimum distance is 2 300 mm.

FRAME BRACKET
Standard frame brackets to be used when fixing the doors on each floor to the system of joists is delivered with the lift (70 mm high). When having underfloor heating a higher frame bracket (150 mm) can be ordered in the webshop.

CEILING BRACKET
If the lift can´t be fixed to the wall in the building a ceiling bracket can be used to fix the lift to the ceiling in the building. The ceiling brackets are painted in Jet Black, RAL9005. They must be mounted before the mast is mounted.
Adjustable distance above lift ceiling to building ceiling is 150 to 750 mm

PREPARATIONS BEFORE INSTALLATION

Before the installation starts, preparation of the site is necessary.

This includes steps such as making sure that the site corresponds to the lift drawings regarding the travel and top height, holes through floors and pit. That the building floor can carry the weight from the lift and that the walls are prepared for fixations. That the power supply requirements as well as two-way communication are fulfilled.

The entire installation will be made in an indoor environment.

For exact details on how to prepare the site before installation, refer to the latest site preparation manual.

RECOMMENDED SALES ARGUMENTS

Benefits for the homeowner -
Uniquely designed for homes

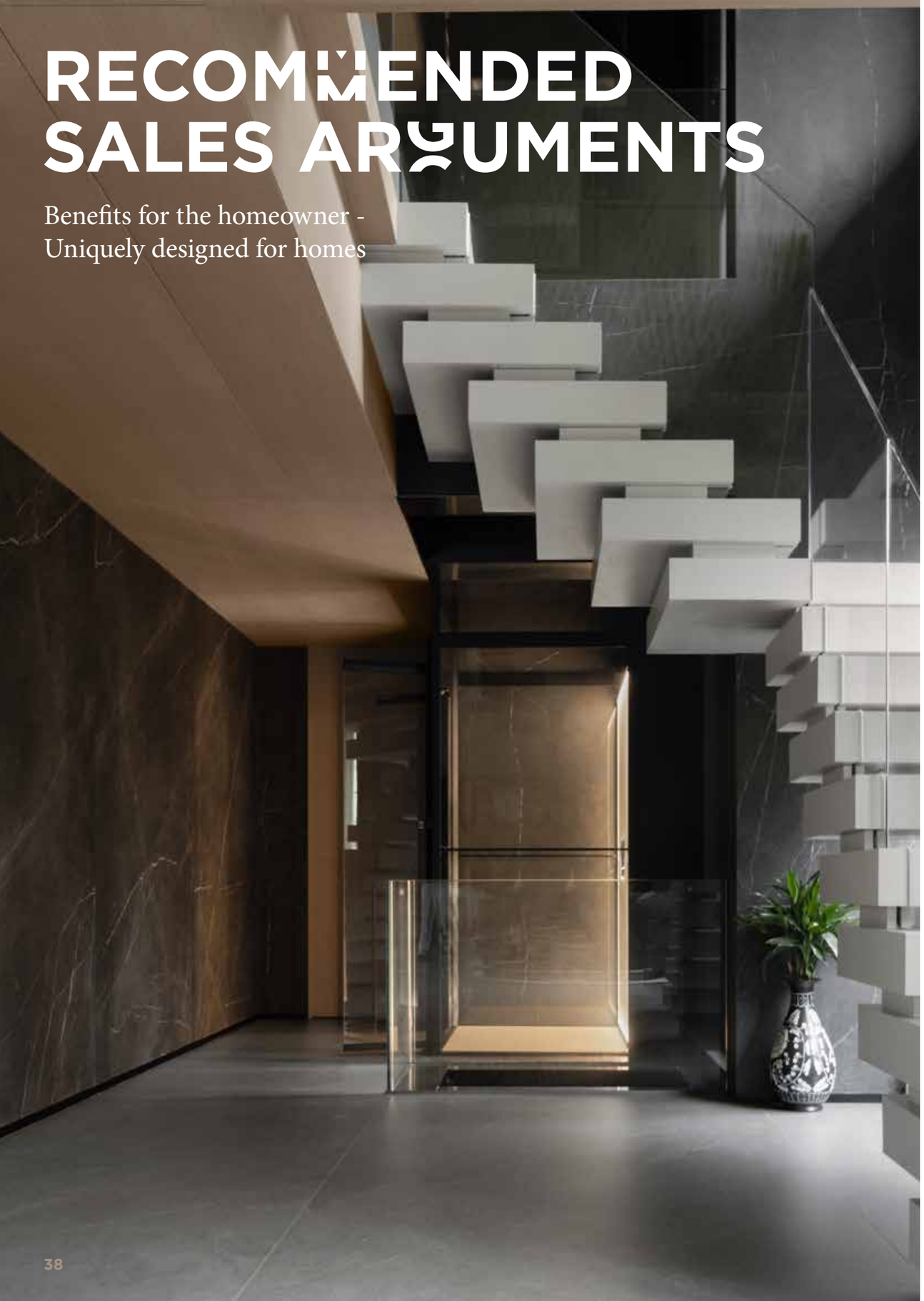

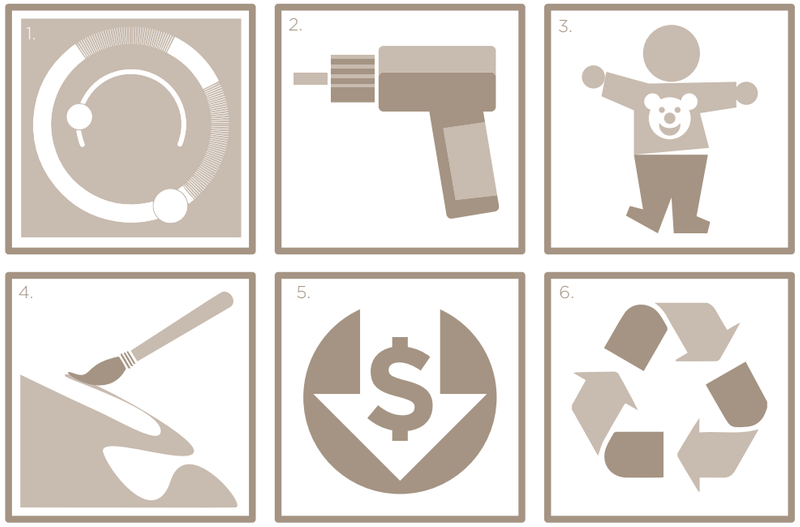

1. Aritco SmartLift
The lift is SmartLift enabled which means you also get live status information in the app and the maintenance provider can get access to a Fleet management system for remote monitoring and support of the lift.

2. EASY INSTALLATION
The Aritco HomeLift can be installed in just a few days (under normal conditions), so interruption to your daily life is minimal during the installation.

Unlike many other lifts, the Aritco HomeLift can be installed directly on the floor. If you want the lift floor to be flush with the room floor, a pit of just 37 mm is required.

3. SMARTSAFETY SYSTEM
The lift is equipped with our SmartSafety system, which includes intelligent doors, safety sensors and dual safety brakes. In the event of a power failure, the battery-driven emergency lowering system will take you safely to the nearest lower level and open the doors.

The smart battery guard ensures that the batteries are not discharged if you turn off the lift, or if the power supply is unstable.

Aritco HomeLift is CE-certified, which is a warranty that fulfils high requirements on safety and reliability. Aritco HomeLifts fulfils Europe's most stringent safety regulations.

4. CUSTOMIZABLE DESIGN
The lifts DesignWall, SmartApp and lighting design are features unlike any other product on the market. Flooring and colour options makes it fit any personal preferences. All of which has a touch of Scandinavian design simplicity.

5. LOW COST
The Aritco HomeLift has one of the markets lowest maintenance costs.
It has a very low energy consumption, less than a typical washing machine.

6. 95% RECYCLABLE
We put great emphasis on the environment to save it for future generations. Therefore, 95% of all the components in the lift are recyclable.

DRAWINGS

For exact details for installation see site preparation manual.

S5

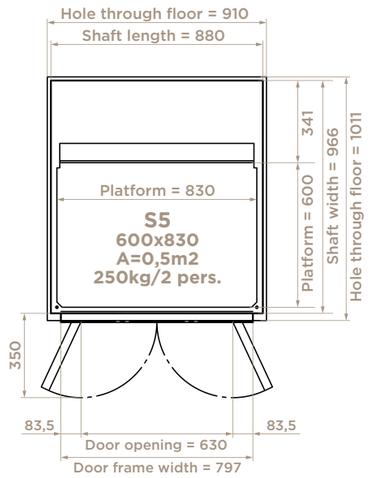

S8

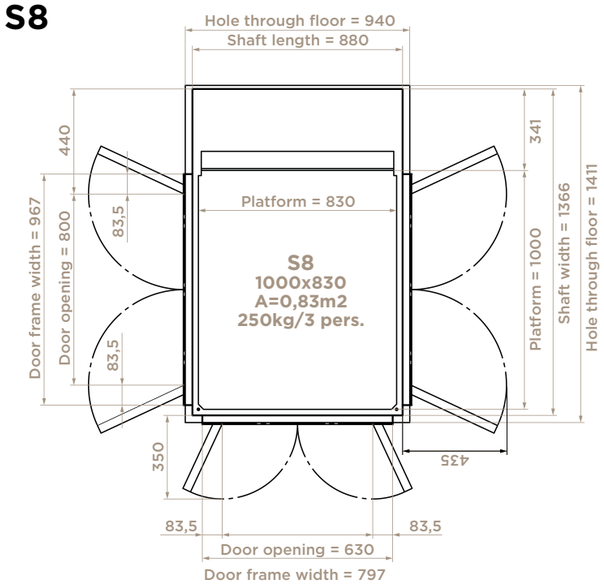

S12

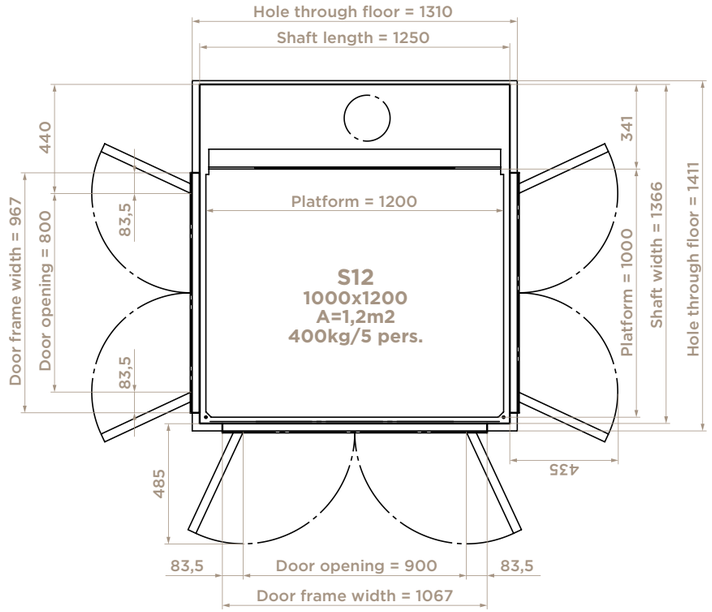

S9

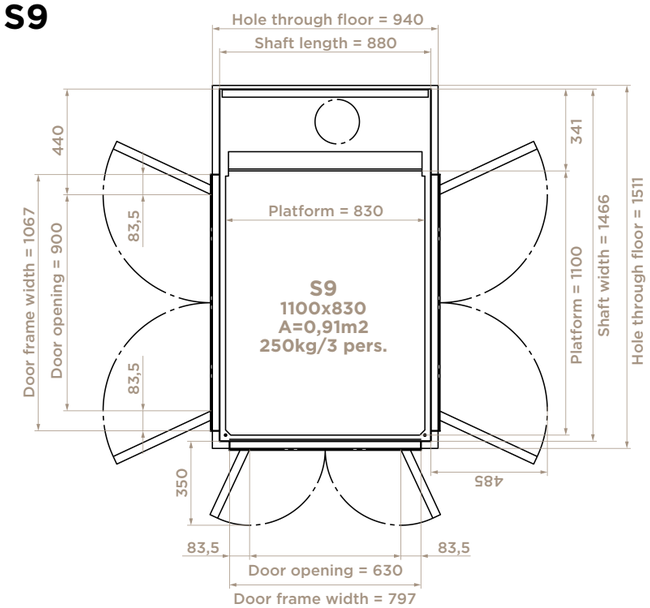

S15

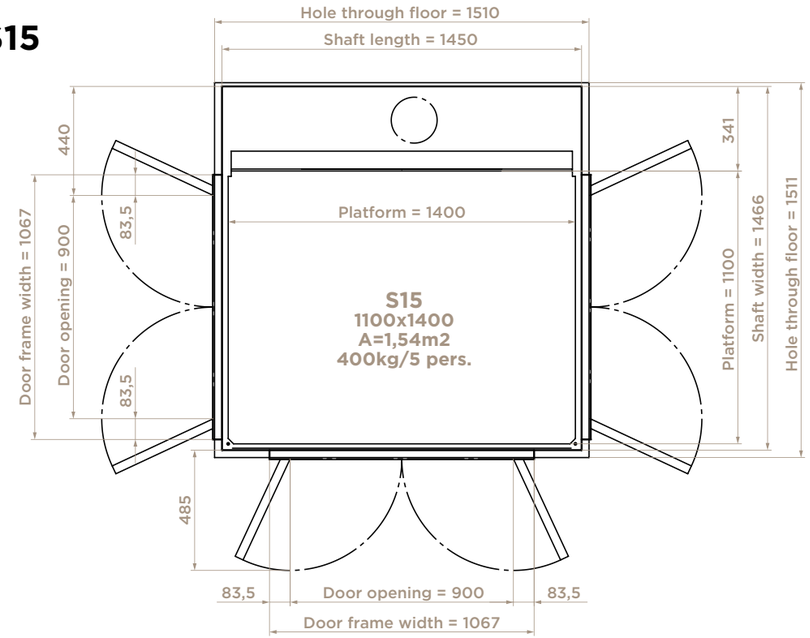

ARITCO LIFT 2024 DEC. - EN

Aritco is a worldleading manufacturer of platform lifts and home lifts. Read more at **aritco.com**

Follow Us!

Aritco Lift AB
Elektronikhöjden 14, Box 516
175 26 Järfälla, Sweden

T: +46 (0) 8 120 401 00
E: info@aritco.com
www.aritco.com

ARITCO™