Gifford Tree Service 11 Oakview, Selsey Road, Hunston, Chichester
PO20 1AU. Mobile 07831488456 Email kim@treetesting.com
url:www.treetesting.com

Arboricultural Impact Assessment/Statements and Tree Protection Plan for Proposal Garage and Parking Area The Well House Moorhill Road SOTON SO30 3AW.

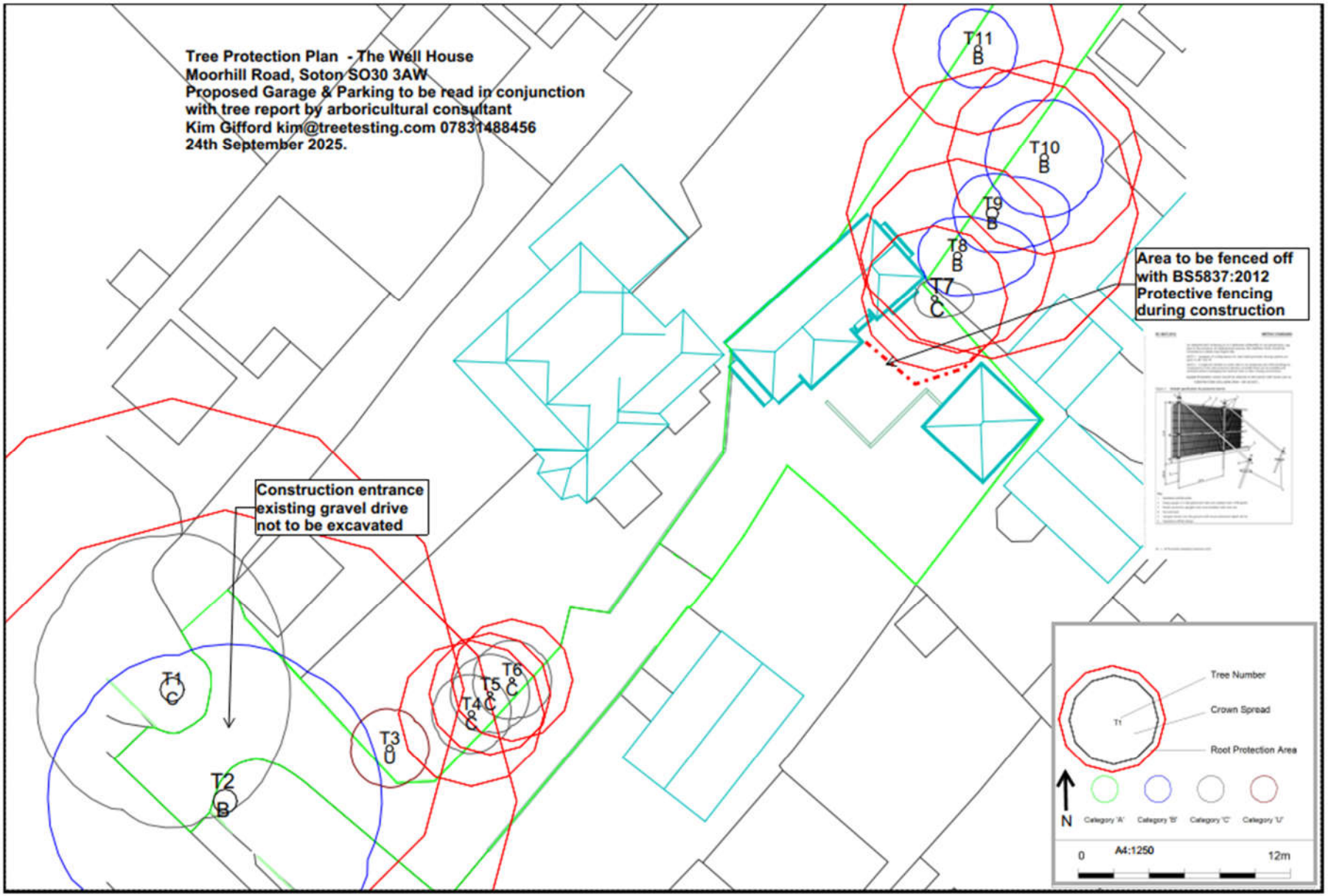

Figure 1 - Tree Protection Plan Screen shot only

Prepared by Kim Gifford 24th September 2025.

1. **Arboricultural Method Statement and Impact Assessment**

The proposal for the Proposal Garage and Parking Area The Well House Moorhill Road SOTON SO30 3AW.

The following Arboricultural method statement is to provide a protection strategy for trees adjacent to this proposal. The tree protection plan (TPP) shows the area of proposal.

This site has 2no major Oaks at the entrance adjacent to Moorhill road T1 and T2. This existing entrance surface is a gravel-based drive which will not be excavated during construction. Holm Oaks T3 to T6 are in neighboring garden along the fence adjacent to the existing drive. Will not be influenced by the proposal. Other trees T6 to T11 to be fenced off by protective fencing during construction will not be influenced by this proposal.

a/ The existing areas within the root protection area, are to be protected with no excavation.

b/ BS5837:2012 Protective fencing is to be installed before construction starts and maintained throughout the whole project.

Tree Survey: Schedule

Method: Visual Tree inspection references, Principles of Tree Hazard Assessment and Management by David Lonsdale and The body language of trees by Claus Mattheck and Helge Breoer. The Arboricultural Association guidance note 7 tree surveys a guide to good practice. Lantra award Professional tree inspection. BS5837: 2012 Tree in relation to design, demolition, and construction recommendations.

- **Tree Number: T1**
- **Species: Quercus robur *(Oak).***
- **Height: 20m**
- **Stem diameter: 1200mm**
- **Crown spread: N8m E9m S9m W8m**
- **Clearance: 4m>**
- **Root Protection Radius: 14.4m (as Annex D BS 5837:2012 table)**
- **RPA m2 = 652m squared**
- **Age Class: Very Mature**
- **Physiological Condition: Poor**
- **Structural Condition: Poor (decay at base)**
- **Estimate Life expectancy: 40>**
- **BS5837 Category: C**

Recommendation: **No excavations to be undertaken during construction.**

- **Tree Number: T2**
- **Species: Quercus robur (Oak).**
- **Height: 20m**
- **Stem diameter: 1200mm**
- **Crown spread: N8m E9m S9m W8m**
- **Clearance: 4m>**
- **Root Protection Radius: 14.4m (as Annex D BS 5837:2012 table)**
- **RPA m2 = 652m squared**
- **Age Class: Very Mature**
- **Physiological Condition: Normal**
- **Structural Condition: Normal**
- **Estimate Life expectancy: 40>**
- **BS5837 Category: B**
-
- **Recommendation: No excavations to be undertaken during construction.**
-
-

- **Tree Number: T3**
- **Species: Dead Laurel.**

- **Tree Number: T4, T5, T6.**
- **Species: Quercus ilex (Holm Oak).**
- **Height: 12m**
- **Stem diameter: 350mm**
- **Crown spread: N3.5m E3.5m S3.5m W3.5m**
- **Clearance: 2.5m>**
- **Root Protection Radius: 4.2m (as Annex D BS 5837:2012 table)**
- **RPA m2 = 55m squared**
- **Age Class: Early Mature**
- **Physiological Condition: Normal**
- **Structural Condition: Normal**
- **Estimate Life expectancy: 40>**
- **BS5837 Category: C**

Recommendation: **no excavation of drive.**

- **Tree Number: T7**
- **Species: Bay**
- **Height: 5m**
- **Stem diameter: 350mm**
- **Crown spread: N2m E2m S2m W2m**
- **Clearance: 2.5m>**
- **Root Protection Radius:**
- **RPA m2 = 55m**
- **Age Class: Young**
- **Physiological Condition: Normal**
- **Structural Condition: Normal**
- **Estimate Life expectancy: <20**
- **BS5837 Category: C**

Recommendation: **Protect by installing fencing as TPP.**

- **Tree Number: T8**
- **Acer pseudoplatanus (Sycamore)**
- **Height: 16m**
- **Stem diameter: 400mm**
- **Crown spread: N4m E4m S4m W4m**
- **Clearance: 4m>**
- **Root Protection Radius: 4.8**
- **RPA m2 = 72**
- **Age Class: Mature**
- **Physiological Condition: Normal**
- **Structural Condition: Normal**
- **Estimate Life expectancy: <40 years**
- **BS5837 Category: B**

Recommendation: Protect by installing fencing as TPP.

- **Tree Number: T9**
- **Quercus robur (Oak)**
- **Height: 18m**
- **Stem diameter: 600mm**
- **Crown spread: N5m E5m S4m W3m**
- **Clearance: 5m>**
- **Root Protection Radius: 7.2**
- **RPA m2 = 163**
- **Age Class: Mature**
- **Physiological Condition: normal**
- **Structural Condition: normal**
- **Estimate Life expectancy: <40 years**
- **BS5837 Category: B**

Recommendation: Protect by installing fencing as TPP.

- **Tree Number: T10**
- **Acer pseudoplatanus (Sycamore)**
- **Height: 16m**
- **Stem diameter: 400mm**
- **Crown spread: N4m E4m S4m W4m**
- **Clearance: 4m>**
- **Root Protection Radius: 4.8**
- **RPA m2 = 72**
- **Age Class: Mature**
- **Physiological Condition: Normal**
- **Structural Condition: Normal**
- **Estimate Life expectancy: <40 years**
- **BS5837 Category: B**

Recommendation: Protect by installing fencing as TPP.

- **Tree Number: T11**
- **Pseudotsuga menziesii (Fir)**
- **Height: 16m**
- **Stem diameter: 400mm**
- **Crown spread: N2m E2m S2m W2m**
- **Clearance: 4m>**
- **Root Protection Radius: 4.8**
- **RPA m2 = 72**
- **Age Class: Mature**
- **Physiological Condition: Normal**
- **Structural Condition: Normal**
- **Estimate Life expectancy: <40 years**
- **BS5837 Category: B**

Recommendation: Protect by installing fencing as TPP.

Contacts:

1. Local Authority Arboricultural officer
2. Contractors undertaking construction.
3. Arboricultural Consultant.

If there is a need to review any of the protection plans/method statements considering additional requirements identified, written approval for any such modifications will be obtained from the LPA prior to commencement of any work.

1.1 Specific Methods to be applied during all operations see Tree protection Plan.

1.1.1 The methodology of tree protection measures follows a logical sequence of development events. Variations to the sequence could significantly reduce the efficiency of the tree protection measures. Variations to the proposed development will require input prior to commencement of the variations, from the appointed arboriculturist and/or the LPA Arboricultural officer.

1.1.2 The LPA will be given notice in writing 5 full working days prior to the date of commencement of development to check all tree protection in place.

1.1.3 Works will be strictly in accordance with the Arboricultural method statement.

1.1.4 It is recommended that only agreed works within the RPA will only be carried out with advice by an arboriculturist. It is the responsibility of the client to seek advice prior to commencement of work.

1.1.5 A schedule of activities that will require Arboricultural advice at various stages has been produced.

1.1.6 Periodic reports, along with supporting evidence, will be submitted to the LPA on tree protection measures, as well as the results of activities within the RPAs of retained trees.

1.2 Preliminary tree maintenance.

1.2.1 Prior to carrying out any tree work, all trees recommended for tree work/removal including their immediately adjacent trees, will be inspected for bird nests (wholly and partially built ones). In the event nests are found, tree work will not be carried out until the trees are found to be free of the nesting birds & their young. This is a requirement under the Wildlife & Countryside Act 1981 & The Countryside & Rights Of Way Act 2000.

1.2.2 All tree work will be carried out in accordance with **BS3998:2010** & will be carried out without harming the adjacent retained trees. (None required)

1.3 Preliminary vegetation control.

1.3. • Clear ground vegetation using a systemic herbicide and gather organic material. Care must be used to select (by reading the label) a herbicide that will not affect the roots of the trees or vegetation. This operation must be carried out by an appropriately trained individual.

1.4 Preliminary tree protection methods.

1.4.1 Construction required of as stated on the Tree Protection Plan.

1.4.2 All or any preliminary tree work: None recommended

1.4.3 Protective fencing to be installed as detailed on tree protection plan to comply with British Standards Institutes specifications guidance BS5837:2012.

1.4.4 If necessary, ground protection of the type specified in the protection plan will be placed in the positions shown on the plan. The specified type will be determined by the assumed load expected.

1.4.5 Prior to commencing work on site, an introduction on the tree protection measures employed during the development will be given.

1.5 Arboricultural Methods and restrictions during all phases of development:

The following tree protection measures will be adopted throughout the life of construction:

1.5.1 The construction exclusion zone will not be moved, except if specified in the tree protection plans. All staff on site will understand the need for protective fencing, as well as any ground protection and to keep strictly within the designated access routes, when moving in/out the site. (None required)

1.5.2 The area will be maintained & inspected on a weekly basis by the site manager. Inspections will be recorded on an inspection form.

1.5.3 All accidental damage to trees will be reported to the site manager immediately. Works occurring within the incident vicinity will cease immediately until adequate tree protection measures are re-established. A record of the damage will be made by the site manager and, in consultation with the appointed Arboricultural consultant, remediation measures carried out.

1.5.4 No materials and/or plant will be stored within the designated root protection area of any of the trees and/or within the delimited construction exclusion areas. Any liquid materials to be stored on site, will be located where, in any event of spillage, will allow for natural run-off to be away from the designated root protection areas and buffer zones and/or stored within a pre-constructed spillage containment area.

1.5.5 The mixing of concrete and mortar will be performed outside any root protection areas, in such an area where in the event of any spills, any liquid will drain away from the root protection areas and any buffer zones and/or within a pre-constructed spillage containment area.

1.5.6 The use and movement of any cranes/heavy lifting arms/digger arms and booms of delivery vehicles will be carried out without damage to any part of the retained trees.

1.5.7 No dry construction materials will be stored within the RPA, unless adequate ground protection (approved by the appointed arboriculturist), has been installed within the storage area.

1.5.8 No soil, demolition debris, or any other arisings will be stored within the RPA or under canopy, whichever is the greater.

1.5.9 No ground level changes will occur (no grading/levelling/raising), within any RPA, unless consented to by the LPA & supervised by the appointed arboriculturist. Changes to the ground levels within RPA will follow the advice of the appointed arboriculturist.

1.5.10 No additional tree work will be carried out unless consented to in writing by the LPA

1.5.11 The positions of all site welfare & storage areas will also be located outside any canopy areas & RPA.

1.5.12 No fires will be lit within 20m of any RPA or canopy, whichever is the greater

1.5.13 For the purposes of this method statement, significant roots referred to, constitute individual roots of diameters of 25mm and above, as well as dense fibrous root masses. The significance of both will be determined by an appointed arboriculturist upon discovery of either.

1.5.14 If roots 20mm and smaller in diameter are damaged that belong to retained trees, these should be cut cleanly and covered in damp Hessian or soil. If roots 25mm and larger are damaged or if a large number of smaller roots are damaged, these should be covered in damp Hessian or soil
& advice should be sought from the appointed arboriculturist prior to treating them.

1.6 Preparation:

1.6.1 A pre-commencement site meeting will be carried out by all involved in the construction & the arboriculturist, to clarify tree protection measures.

1.6.2 Tree protection measures will have been installed prior to the commencement of site preparation.

1.6.3 No plant machinery will encroach on the RPA, unless the ground is adequately protected & ensure machinery is incapable of striking the canopy or tree stem. If plant machinery is to encroach on protected RPA.

1.6.4 The above precautions will be adhered to until landscaping operations are to be undertaken. This will provide additional protection for the Root Protection Areas.

1.6.5 Debris from any preparation work will not be stored within any RPA.

1.7 Construction:

1.7.1 The tree protection measures will be retained in the positions specified on the Protection Plan.

Structure foundations within RPA:

1.7.3 The foundations for the proposed encroach on the RPA. If roots are encountered, these will be cut cleanly. Excavations in this area will be supervised by the appointed arboriculturist.

1.7.4 Impermeable membranes will be used when pouring concrete for foundations, to avoid contamination of the soil & damage to any tree roots by wet cement, particularly within the RPAs of the retained trees.

Underground services:

1.7.5 The excavations for any underground services will be routed outside any RPAs. If it is unavoidable that underground services be run inside RPAs, then the trenches for them will be excavated by hand or air-spade. Any roots that span the trench during digging will not be cut, but will have damp Hessian sacking placed around them. Damaged roots of up to 2cm diam will, where possible, be cut cleanly and covered. Any substantial roots (larger than 25mm diam), that become damaged or need to be removed, advice will first be sought from the supervising arboriculturist prior to any work being carried out on them. This will be carried out under Arboricultural supervision

1.7.6 If and when installing infrastructure for underground services, they will be done by hand within any RPA and care will be taken not to damage the exposed roots. Back-fill within an RPA will not be compacted and will possess the same soil profile as the surrounding soil. If there is a need to compact Backfill, in preparation for the reinstatement and/or installation of infrastructure within an RPA, then CU structural soil will be used as Backfill.

1.7.7 The timing of any excavations for underground services will coincide with the arrival of materials to be used for the construction of the underground services, to minimize the time that roots are exposed. Roots will not be left exposed for more than 24 hours. **(none required)**

1.8 Landscaping:

1.8.1 Landscaping operations will commence only when all main construction work has ceased. Protective measures will be removed immediately prior to commencing these operations.

1.8.2 Limited lowering will occur within the RPA.

1.8.3 The existing soil levels will not be raised by more than 150mm within RPA.

1.8.4 Excavations for planting within RPA of retained trees will be carried out by hand only. The same will apply for the introduction of topsoil, plant transport & mulching.

1.8.5 All landscaping work within RPA will also be carried out by hand only.

Footpaths/hard surfaces:

1.8.6 Any exposed roots will be covered with damp Hessian. Debris from the excavation will not be stored in this area but will be immediately removed from the RPA.

1.8.7 General purpose topsoil to BS3882:2007 will be used to replace the previous hard surface. N/A

1.8.8 The proposed garage will impinge on the RPA. (See TPP)

Boundary treatments within RPA:

1.8.9 Where new boundary fences are proposed to be installed within the RPA, this will be carried out using hand tools only. Excavations will be undertaken using hand tools only at proposed fence post locations to confirm the existence of significant or insignificant roots. If significant roots are found, then an alternate location will be sought using the same method.

1.9 Post-development tree Care and amelioration

1.9.1 Once all construction & landscaping activities have been completed, any remaining ground protection/protective fencing will be removed.

1.9.2 A detailed visual inspection of the retained trees on the site & RPA, will be carried out, to check for signs of development damage to the trees and their rooting environment. Appropriate remedial tree / soil work will then be recommended.

1.9.3 Any damaged branches will be removed or pruned cleanly in line with current good Arboricultural practice (BS3998:2010) and any specific Arboricultural advice. Any other remedial work will also be carried out as & when recommended.

1.9.4 A tree inspection regime will be implemented to monitor the health of the retained & replaced trees for an agreed period after the development project is complete. The appointed arboriculturist may provide reports to the client & the local authority at times, on the condition of the retained trees & any remediation work recommended.

This concludes the method statement.

Kim Gifford
Arboricultural Consultant

on retained hard surfacing or it is otherwise unfeasible to use ground pins, e.g. due to the presence of underground services, the stabilizer struts should be mounted on a block tray (Figure 3b).

NOTE 1 Examples of configurations for steel mesh perimeter fencing systems are given in BS 1722-18.

NOTE 2 It might be feasible on some sites to use temporary site office buildings as components of the tree protection barriers, provided these can be installed and removed without damaging the retained trees or their rooting environment.

6.2.2.4 All-weather notices should be attached to the barrier with words such as:

"CONSTRUCTION EXCLUSION ZONE – NO ACCESS".

Figure 2 **Default specification for protective barrier**

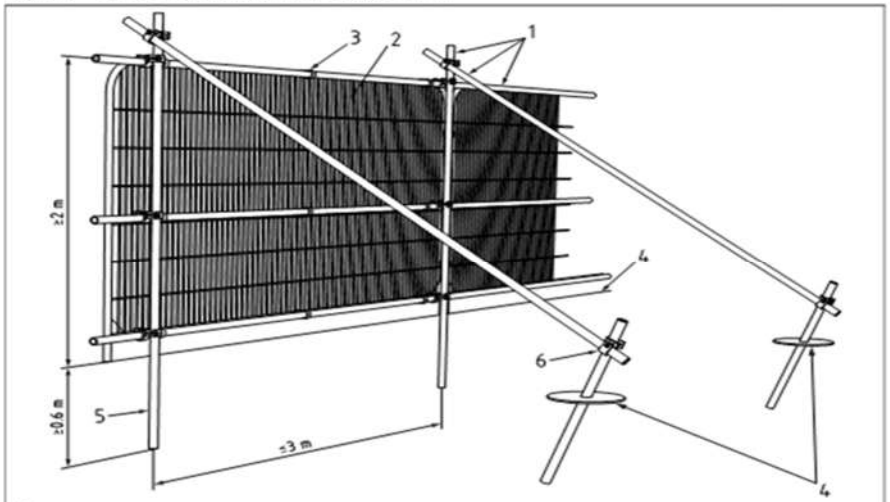

Key

1 Standard scaffold poles
2 Heavy gauge 2 m tall galvanized tube and welded mesh infill panels
3 Panels secured to uprights and cross-members with wire ties
4 Ground level
5 Uprights driven into the ground until secure (minimum depth 0.6 m)
6 Standard scaffold clamps

Bought by Mr. Kim Gifford Gifford Tree Service on 03/05/2012 18:56 Latest version, Not to be distributed/networked, For multi-user access www.bsigroup.com/license © BSI

Figure 2- BS5837:2012 Fencing for RPA

Tree Protection Areas - Construction Exclusion Zones

INSTALLING PROTECTION Protective barriers and ground protection (as approved), must be installed before any materials or machinery are brought onto the site and before the commencement of any demolition, general site clearance, ground or construction works of any description.

RETENTION OF PROTECTION All protective measures must remain fully intact, vertical (in the case of barriers), , in their approved locations, from the outset of the development and maintained, at all times, until all works have been completed on site, including any earthworks and associated soft landscaping works. Any approved phasing of protective measures must be fully observed and complied with.

RESTRICTIONS Tree Protection Areas/ Construction Exclusion Zones are to remain completely undisturbed for the duration of all development works. No construction activity of any description including but not limited to the following must occur within these areas at any time.

- No excavation of any description.
- No storage, disposal of soil, rubble or materials of any other description.
- No alterations to existing levels or ground conditions.
- No vehicular access, parking or use of any tracked or wheeled machinery of any description.
- No tree works, without the written consent of the Council's Tree Service.
- No erection of temporary structures of any description.
- No fires.
- No storage disposal handing or use of any Chemicals including cement washings.
- No fixtures or fittings of any description _ security lighting, signage etc shall be attached to any part of a tree.

- No fires shall be light within 10 metres of the canopies of any tree or spread of any hedge.

- No chemicals, fuel, liquids/waste residues of any other description to be stored or disposed of within close proximity to or drained towards/ into protection areas.

PROTECTION AREA SIGNAGE - All weather notices as below or similar to be fixed to protective barriers at regular intervals (maximum spacing 5m) throughout site and maintained until completion of all development works

All protection measures shall be routinely monitored by an appointed suitably qualified project Arboricultural advisor at 4 week intervals minimum for the duration of all works. - A signed copy of inspection report following each visit is to be sent to the Bracknell Forest Council's Planning Dept.

Figure 3 - Signage to be put on fencing

T11

T9

T8

T9
T8
T7

T4
T3

T1

T2