DRAINAGE NOTES

1. ANY PIPES TO BE ADOPTED, OR CONNECTING TO ADOPTED SEWERS, AND/OR SITUATED UNDER THE HIGHWAY, TO BE VITRIFIED CLAY TO BS EN 295 & BS65 (SWS ONLY), OR CONCRETE PIPES TO BS EN 1916 & BS5811:PART 1, OR PLASTIC IN ACCORDANCE WITH THE FOLLOWING STANDARDS:
   - SOLID WALL PVC–U TO BS EN 1401
   - SPIRAL WOUND WELDED HDPE TO BS EN 13476 PARTS 1 & 2
   - STRUCTURE–WALL THERMOPLASTIC TO BS EN 13476 PARTS 1, 2 & 3
   - POLYPROPYLENE TO BS EN 1852
2. FOR CONSTRUCTION DETAILS REFER TO THE RELEVANT ARCH ASSOCIATES DRAWING NUMBERS LISTED ON THE DRAWING ISSUE SHEET.
3. ADOPTABLE HIGHWAY WORKS ARE TO BE IN ACCORDANCE WITH LOCAL AUTHORITY DESIGN GUIDANCE.
4. ANY WORKS ASSOCIATED WITH THE HIGHWAY/EXTERNAL WORKS INCLUDING HIGHWAY DRAINAGE, SHALL BE IN ACCORDANCE WITH THE HIGHWAYS AGENCY 'MANUAL OF CONTRACT DOCUMENTS FOR HIGHWAY WORKS, VOL 1' (MCHW), UNLESS OTHERWISE SPECIFIED.
5. ALL ADOPTABLE DRAINAGE WORKS TO BE CONSTRUCTED AS DETAILED IN "THE CODE" FOR ADOPTION DESIGN AND CONSTRUCTION GUIDANCE AND THE LOCAL WATER AUTHORITY'S LOCAL PRACTICE NOTE.
6. ALL ADOPTABLE SEWERS WITH LESS THAN 1.20m OF COVER WHEN LAID BENEATH THE ROADS, OR 0.90m OF COVER IN OTHER AREAS, SHALL HAVE CONCRETE PROTECTION IN ACCORDANCE WITH EITHER OF THE DETAILS SHOWN ON THE STANDARD DRAWING PROVIDED.
7. ALL DRAINAGE WORKS SHOULD COMMENCE AT THE PROPOSED DOWNSTREAM CONNECTION POINT, THE WORKS CONTINUING UPSTREAM FOLLOWING CONFIRMATION OF THE TIE–IN INVERT LEVELS TO THE ENGINEER. CONNECTIONS TO MANHOLES OR LARGER SIZED PIPES ETC. SHOULD BE SOFFIT TO SOFFIT UNLESS OTHERWISE INSTRUCTED BY THE ENGINEER, IF THIS IS NOT POSSIBLE INFORM THE ENGINEER IMMEDIATELY.
8. COVER LEVELS SHOWN ARE APPROXIMATE. COVERS AND FRAMES SHALL BE SET TO FINISHED GROUND LEVELS AND FALLS.
9. ROAD GULLY PIPES ARE TO BE 150mm DIA. WITH CONCRETE SURROUND AND FLEXIBLE JOINTS, ALL OTHER UN–REFERENCED PIPES ARE ASSUMED TO BE 100mm DIA.
   - FW MIN GRADIENT – 1 IN 40 (100 DIA) NO WC'S CONNECTED
   - FW MIN GRADIENT – 1 IN 80 (100 DIA) MIN 1 WC CONNECTED
   - FW MIN GRADIENT – 1 IN 150 (150 DIA) MIN 5 WC'S CONNECTED
   - SW MIN GRADIENT – 1 IN 100 (100 DIA)
   - SW MIN GRADIENT – 1 IN 150 (150 DIA)

   ALL GULLIES SHALL BE FITTED WITH GRADE D400 GRATINGS AND FRAMES TO BS EN124, UNLESS OTHERWISE STATED.
14. IN ORDER TO MAINTAIN THE SATISFACTORY FUNCTIONING OF SURFACE WATER SEWERS, ALL ROAD AND YARD GULLIES ARE TO BE "TRAPPED".
15. ALL NON ADOPTABLE LATERALS BENEATH THE HIGHWAY SHALL BE BACK FILLED WITH A TYPE 1 GRANULAR MATERIAL AS CL.803 (MCHW) APPROVED BY THE ENGINEER.
16. ALL PRIVATE DRAINAGE TO BE IN ACCORDANCE WITH THE BUILDING REGULATIONS APPROVED DOCUMENT PART–H, AND TO THE SATISFACTION OF THE BUILDING CONTROL INSPECTOR.
17. WHERE DRAINS PASS THROUGH FOUNDATIONS OR CONNECT TO MANHOLES, A FLEXIBLE PIPE JOINT SHOULD BE PROVIDED TO FORM A ROCKER PIPE IN ACCORDANCE WITH THE STANDARD DETAIL PROVIDED.
18. SHALLOW PRIVATE DRAINS MAY REQUIRE PROTECTION USING CLASS "Z" CONCRETE SURROUND OR PAVING SLABS BRIDGING THE TRENCH SUBJECT TO THE NHBC INSPECTOR'S REQUIREMENTS.
19. WHERE DRAINAGE RUNS PASS CLOSE TO BUILDINGS OR THEIR INVERT LEVELS ARE BELOW FOUNDATION LEVEL, THEN THE TRENCHES ARE TO BE BACK FILLED IN ACCORDANCE WITH THE STANDARD DETAIL PROVIDED.
20. REFERENCE SHOULD BE MADE TO THE STRUCTURAL ENGINEERS DETAILS FOR ALL ASPECTS OF FOUNDATION DESIGN AND CONSTRUCTION.
21. THE CONTRACTOR IS TO KEEP A RECORD OF ANY VARIATIONS MADE ON SITE, INCLUDING THE RELOCATION OF SEWERS OR DRAINS, SO THAT AN AS CONSTRUCTED DRAWING CAN BE PREPARED UPON COMPLETION OF THE PROJECT.
22. THE CONTRACTOR SHOULD CHECK ALL DIMENSIONS ON SITE. NO DIMENSIONS ARE TO BE SCALED FROM THESE DRAWINGS.
23. IT IS THE CONTRACTORS/SUBCONTRACTORS RESPONSIBILITY TO ENSURE COMPLIANCE WITH THE CURRENT BUILDING REGULATIONS AND CODES OF PRACTICE.
24. STUB CONNECTIONS TO ADOPTABLE MANHOLES SHALL BE MADE FROM VITRIFIED CLAY AND CONSIST OF TWO ROCKER PIPES LAID AT THE SAME GRADIENT AS THE UP OR DOWNSTREAM PIPE.
25. ALL DOWNPIPES ARE TO BE SEALED, IE CONNECTED DIRECTLY TO THE STORMWATER DRAIN. ACCESS POINTS TO BE PROVIDED 1m ABOVE GROUND LEVEL FOR EXTERNAL RWP'S AND 1m ABOVE FFL FOR INTERNAL RWP'S.
26. UNLESS OTHERWISE NOTED OR SIMILAR APPROVED CHANNEL DRAINS TO BE ACO MULTI DRAIN WITH A15 GRATING IN PEDESTRIAN AREAS, C250 IN CAR PARKS AND D400 IN CARRIAGEWAYS. SLOTTED CHANNEL TO BE USED FOR AREAS WITH FALLS <1:15 MESH GRATING TO BE USED WHERE FALLS >1:15.
27. GULLY AND CHANNEL DRAIN POSITIONS ARE LIABLE TO AMENDMENT WHEN THE DESIGN LEVELS HAVE BEEN DETERMINED.
28. MODULAR GEOCELLULAR STORAGE/SOAKAWAY SYSTEM TO CONFORM TO CIRIA C793 THE SUDS MANUAL, C680 STRUCTURAL DESIGN OF MODULAR GEOCELLULAR DRAINAGE TANKS & C698 SITE HANDBOOK FOR THE CONSTRUCTION OF SUDS. THE MANUFACTURER SHOULD PROVIDE A COMPLETE SET OF INDEPENDENT TEST RESULTS FOR A PROPOSED SYSTEM INCLUDING, AS A MINIMUM, STRESS/STRAIN CURVES FOR VERTICAL AND LATERAL COMPRESSION, AND CREEP TESTS UNDER SUSTAINED LONG–TERM LOADS. A BBA CERTIFICATE IS NOT INDEPENDENT TEST DATA.
29. ALL REDUNDANT DRAINAGE TO BE ABANDONED ONCE THE CONTRACTOR HAS SATISFIED HIMSELF THAT NO CONNECTIONS REMAIN LIVE. REDUNDANT DRAINAGE TO BE GRUBBED OUT.
30. ALL BELOW GROUND CONCRETE TO ACCORD WITH BS5328:1997;SULPHATE CLASS TBA.
31. IF ANY SUB SOIL DRAINAGE SYSTEMS ARE UNCOVERED DURING THE WORKS CONTACT THE ENGINEER FOR INSTRUCTIONS. GENERALLY SUB SOIL DRAINS AFFECTED ARE TO BE DIVERTED AROUND NEW WORKS AND CONNECTED INTO THE SURFACE WATER DRAINAGE SYSTEM. PIPE DIAMETERS AND GRADIENTS ARE TO BE MAINTAINED.
32. BEFORE COMMENCING CONSTRUCTION THE CONTRACTOR MUST CHECK THE INVERT LEVELS OF EXISTING SEWERS TO WHICH CONNECTIONS ARE MADE. IN ADDITION THE CONTRACTOR MUST LOCATE AND DETERMINE INVERT LEVELS OF THE EXISTING SPURS TO WHICH CONNECTIONS ARE PROPOSED. ADDITIONAL SPUR/MANHOLE CONNECTIONS ARE TO BE AGREED WITH THE RELEVANT ADOPTING AUTHORITY. ANY DISCREPANCIES ARE TO BE NOTIFIED TO THE ENGINEER IMMEDIATELY, PRIOR TO CONSTRUCTION.
33. ROAD REINSTATEMENTS ARE TO BE TO THE HIGHWAY AUTHORITY APPROVAL.
34. NO PRIVATE AREAS ARE TO DRAIN ONTO ADOPTABLE AREAS AND VICE VERSA.

Scale 1:1
0mm 50 100

NOTES

© This drawing is the copyright of ARCH Associates Limited. It may not be copied, altered or reproduced without their written authority.
This drawing must not be scaled. IF IN DOUBT ASK.

Rev.	Date	Description	By
P02	21.11.2025	RESERVED MATTERS SUBMISSION	TA
P01	17.11.2025	PRELIMINARY ISSUE FOR COMMENT	TA

ARCH ASSOCIATES
01489 890004
admin@archassociates.co.uk
www.archassociates.co.uk

Client
EASTLEIGH BOROUGH COUNCIL

Architect
BOYLE & SUMMERS

Project title
ONE HORTON HEATH,
UPPER ACRE,
EASTLEIGH.

Drawing title
DRAINAGE NOTES.

Scale	Paper size	Date	Drawn by	Checked by	Status
NTS	A1	NOV 2025	TA	CH	S3

Name
Project code | Originator | Functional breakdown | Spatial breakdown | Form | Discipline | Number | Revision
AAL390-AAL- ED - XX - LS - C -5199- P02

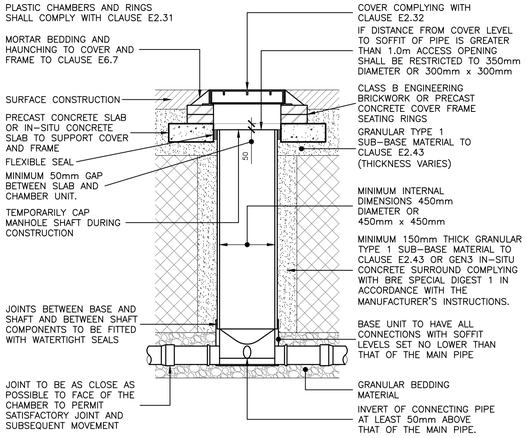

NOTE: WHERE THE ACCESS CHAMBER IS IN THE HIGHWAY (INCLUDING ANY FOOTWAY) THE HIGHWAY AUTHORITY MAY HAVE SPECIFIC REQUIREMENTS

TYPICAL INSPECTION CHAMBER DETAIL – TYPE D

DEPTH FROM COVER LEVEL TO SOFFIT OF PIPE UP TO 3m
FLEXIBLE MATERIAL CONSTRUCTION FOR USE IN AREAS SUBJECT TO VEHICLE LOADING
(SCALE 1:25@A1)

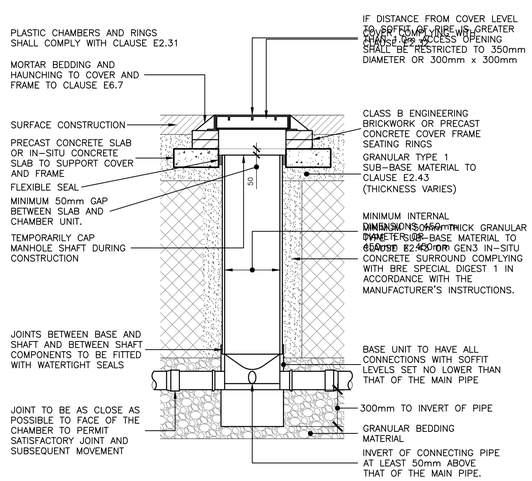

NOTE: WHERE THE ACCESS CHAMBER IS IN THE HIGHWAY (INCLUDING ANY FOOTWAY) THE HIGHWAY AUTHORITY MAY HAVE SPECIFIC REQUIREMENTS

TYPICAL INSPECTION CHAMBER CATCHPIT DETAIL – TYPE D

DEPTH FROM COVER LEVEL TO SOFFIT OF PIPE UP TO 3m
FLEXIBLE MATERIAL CONSTRUCTION FOR USE IN AREAS SUBJECT TO VEHICLE LOADING
(SCALE 1:25@A1)

SITED IN DOMESTIC DRIVEWAYS OR FOOTWAYS

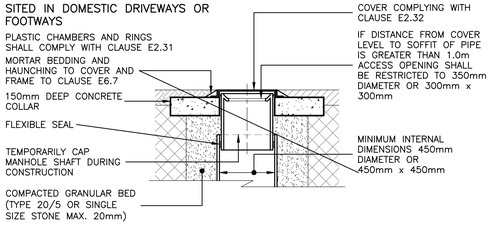

SITED IN DOMESTIC GARDENS

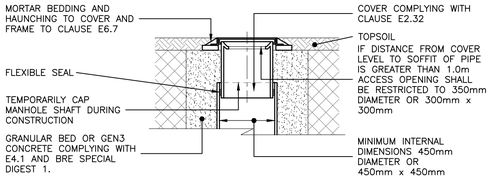

TYPICAL INSPECTION CHAMBER DETAIL – TYPE D

FLEXIBLE MATERIAL CONSTRUCTION ALTERNATIVE TOP DETAILS FOR USE IN AREAS OF LIGHT VEHICLE LOADING AND LANDSCAPED AREAS
(SCALE 1:25@A1)

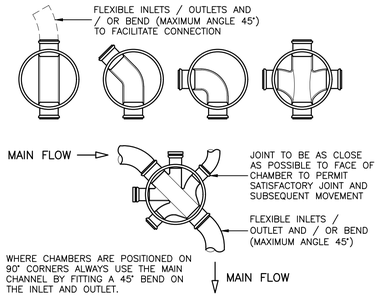

NOTE: WHERE A BEND IS USED IMMEDIATELY OUTSIDE THE MANHOLE, THIS MAY BE USED AS A ROCKER PIPE.

TYPICAL BASE LAYOUTS FOR TYPE D CHAMBERS

(SCALE 1:25@A1)

NOTES

© This drawing is the copyright of ARCH Associates Limited. It may not be copied, altered or reproduced without their written authority. This drawing must not be scaled. IF IN DOUBT ASK.

GENERAL NOTES

1. THIS DRAWING IS TO BE READ IN CONJUNCTION WITH ALL RELEVANT ARCHITECTS, ENGINEERS AND SPECIALISTS DRAWINGS AND DETAILS.
2. ALL FIGURED DIMENSIONS TO BE TAKEN IN PREFERENCE TO SCALED DIMENSIONS.
3. ANY DISCREPANCIES BETWEEN THIS DRAWING AND OTHER INFORMATION IS TO BE BROUGHT TO THE ATTENTION OF THE ENGINEER PRIOR TO THE COMMENCEMENT OF THE WORKS ON SITE.
4. THE MAIN CONTRACTOR SHALL BE RESPONSIBLE FOR THE SETTING OUT AND ACCURACY OF ALL DIMENSIONS.
5. THE CONTRACTOR IS TO ENSURE THE STABILITY AND STRUCTURAL INTEGRITY OF THE EXISTING PROPERTY AT ALL TIMES DURING WORKS AND IS TO BE RESPONSIBLE FOR ALL PROPPING AND SHORING AS REQUIRED.
6. MAIN CONTRACTOR TO PROVIDE AND FIX SUITABLE BRACING AND PROPPING FOR ALL ELEMENTS IN THE TEMPORARY CONDITION DURING CONSTRUCTION STAGE, SUCH AS TO ENSURE STRUCTURE STABILITY AT ALL TIMES.
7. IT IS THE CONTRACTORS SOLE RESPONSIBILITY FOR ASCERTAINING SAFE DISPOSAL OF ANY OFF-SITE EXCAVATED SPOIL. NO CLAIM RESULTING FROM ABNORMAL TIP REQUIREMENTS WILL BE ENTERTAINED.

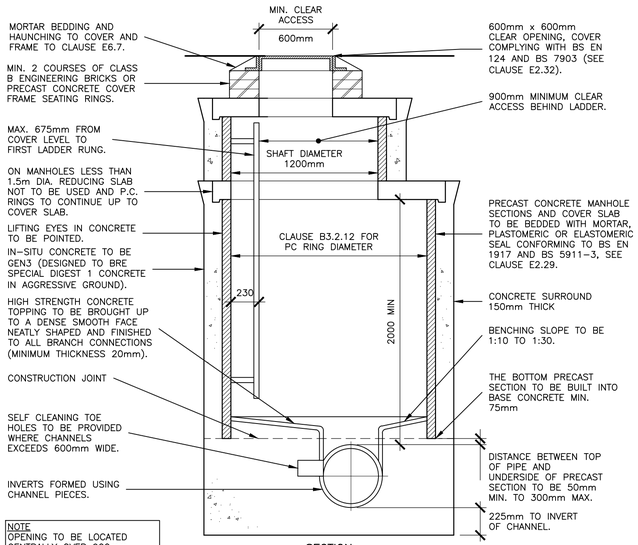

NOTE
OPENING TO BE LOCATED CENTRALLY OVER 900mm SHAFT AND OFFSET APPROXIMATELY 200mm FOR 120mm DIAMETER SHAFT.

TYPICAL MANHOLE DETAIL – TYPE A

DEPTH FROM COVER LEVEL TO SOFFIT OF PIPE 3.0m TO 6.0m
(SCALE 1:25@A1)

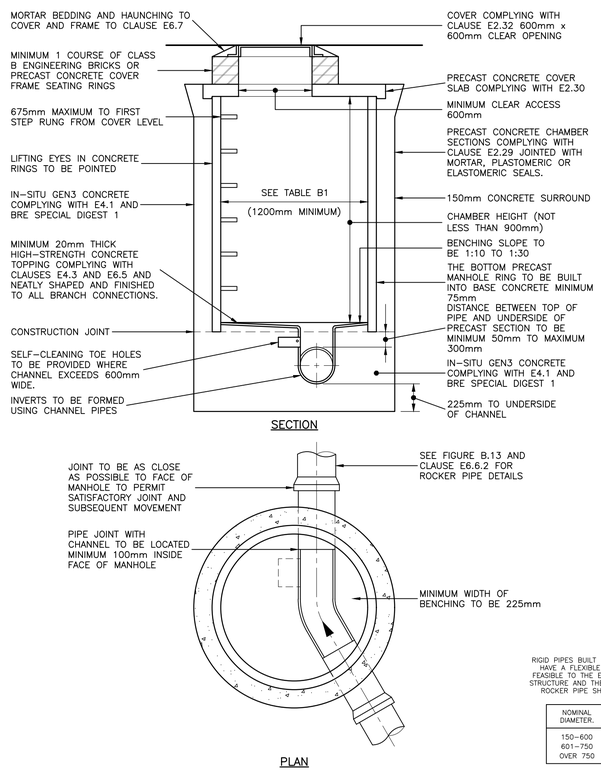

RIGID PIPES BUILT INTO MANHOLE SHOULD HAVE A FLEXIBLE JOINT AS CLOSE AS FEASIBLE TO THE EXTERNAL FACE OF THE STRUCTURE AND THE LENGTH OF THE NEXT ROCKER PIPE SHOULD BE AS SHOWN

NOMINAL DIAMETER.	ROCKER PIPE LENGTH
150–600	0.6
601–750	1.0
OVER 750	1.25

TYPICAL MANHOLE DETAIL – TYPE B

DEPTH FROM COVER LEVEL TO SOFFIT OF PIPE 1.5m–3.0m
(RIGID MATERIAL CONSTRUCTION WITH CONCRETE SURROUND)
(SCALE 1:25@A1)

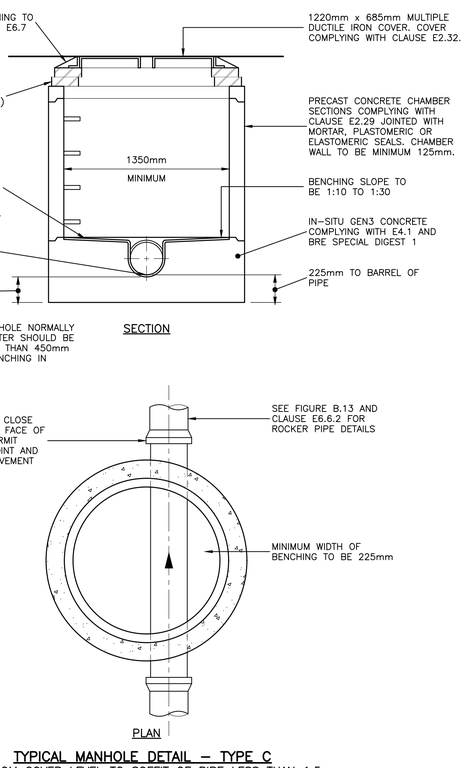

TYPICAL MANHOLE DETAIL – TYPE C

DEPTH FROM COVER LEVEL TO SOFFIT OF PIPE LESS THAN 1.5m
(RIGID MATERIAL CONSTRUCTION)
(SCALE 1:25@A1)

Rev.	Date	Description	By
P02	21.11.2025	RESERVED MATTERS SUBMISSION	TA
P01	17.11.2025	PRELIMINARY ISSUES FOR COMMENT	TA

ARCH ASSOCIATES
01489 890004
admin@archassociates.co.uk
www.archassociates.co.uk

Client
EASTLEIGH BOROUGH COUNCIL

Architect
BOYLE & SUMMERS

Project title
ONE HORTON HEATH, UPPER ACRE, EASTLEIGH.

Drawing title
DRAINAGE DETAILS, SHEET 1.

Scale	Paper size	Date	Drawn by	Checked by	Status
AS SHOWN	A1	OCT 2025	TA	CH	

Name
Project code | Originator | Functional breakdown | Spatial breakdown | Form | Discipline | Number | Revision
AAL390 - AAL - ED - XX - DD - C - 5551 - P02

Scale 1:1
0mm 50 100

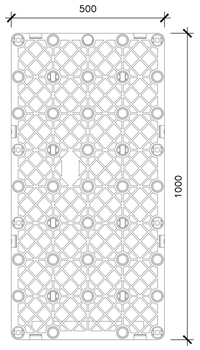

POLYSTORM XTRA – PLAN VIEW
(SCALE 1:10@A1)

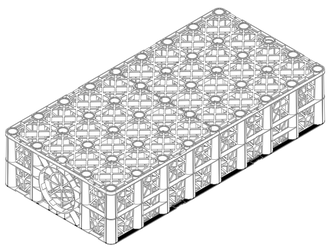

POLYSTORM XTRA – ISOMETRIC VIEW
(SCALE 1:10@A1)

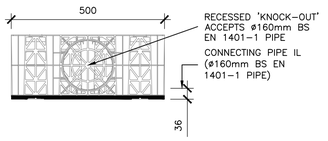

POLYSTORM XTRA – END ELEVATION
(SCALE 1:10@A1)

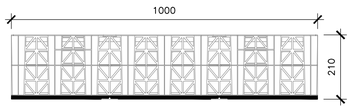

POLYSTORM XTRA – SIDE ELEVATION
(SCALE 1:10@A1)

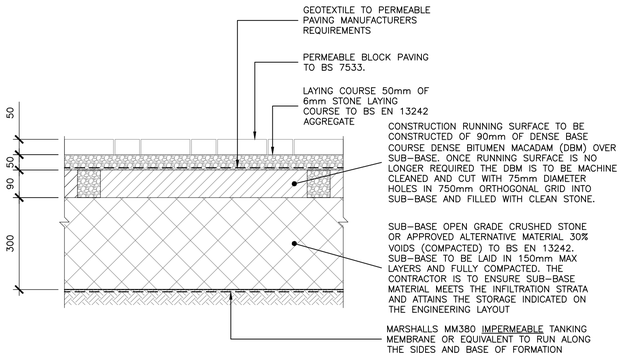

LINED PERMEABLE BLOCK PAVED PRIVATE DRIVES AND PARKING AREAS
(SCALE 1:10@A1)

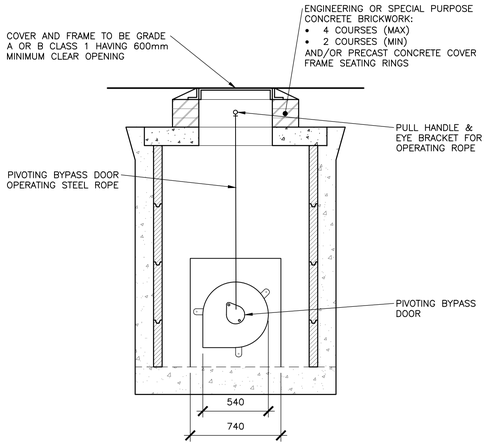

SECTION 1–1

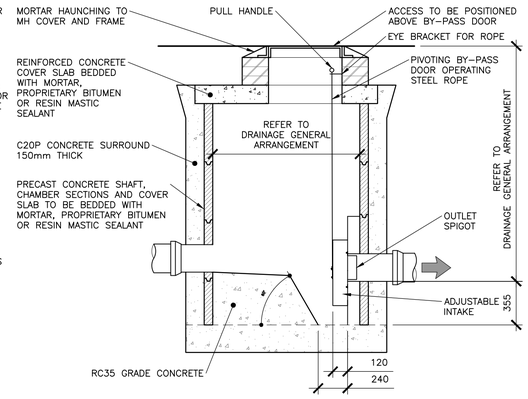

SECTION 2–2

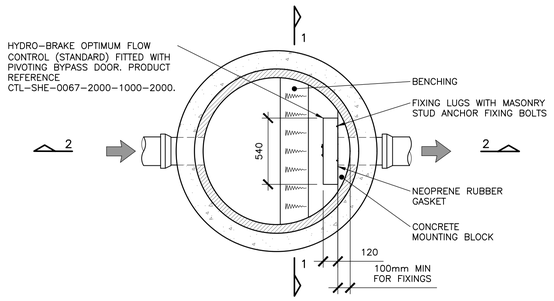

STANDARD FLOW CONTROL MANHOLE DETAIL
(1:25)

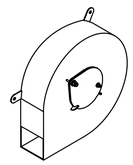

ISOMETRIC VIEW

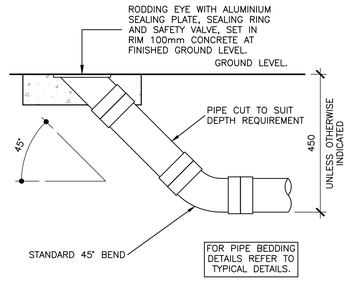

RODDING EYE DETAIL
(SCALE 1:10@A1)
TO BE USED IN PEDESTRAIN AND LANDSCAPED AREAS NOT SUBJECT TO VEHICULAR LOADING. MAXIMUM DEPTH TO INVERT 600mm.

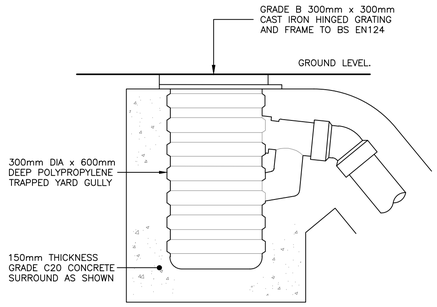

YARD GULLY DETAIL
(SCALE 1:10@A1)

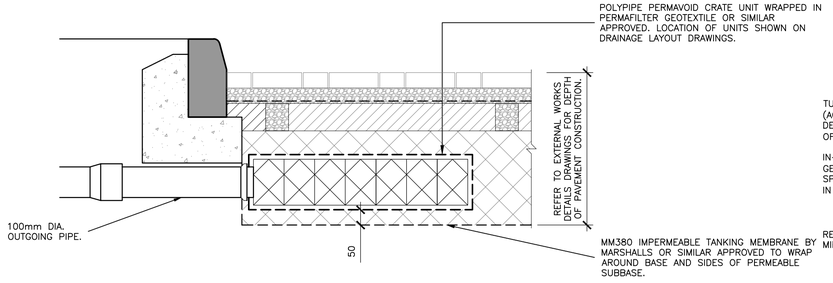

PERMAVOID DISTRIBUTION TANK DETAIL
(SCALE 1:10@A1)

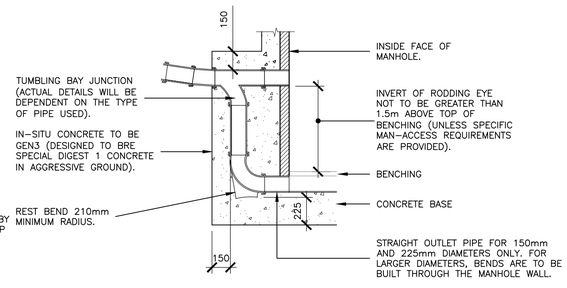

EXTERNAL VERTICAL BACKDROP DETAIL
(SCALE 1:25@A1)

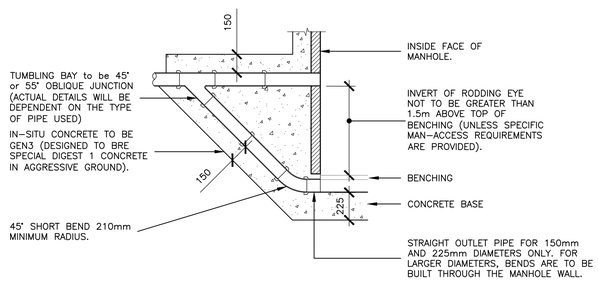

EXTERNAL RAMPED BACKDROP DETAIL
(SCALE 1:25@A1)

NOTES

© This drawing is the copyright of ARCH Associates Limited. It may not be copied, altered or reproduced without their written authority.
This drawing must not be scaled. IF IN DOUBT ASK.

GENERAL NOTES

1. THIS DRAWING IS TO BE READ IN CONJUNCTION WITH ALL RELEVANT ARCHITECTS, ENGINEERS AND SPECIALISTS DRAWINGS AND DETAILS.
2. ALL FIGURED DIMENSIONS TO BE TAKEN IN PREFERENCE TO SCALED DIMENSIONS.
3. ANY DISCREPANCIES BETWEEN THIS DRAWING AND OTHER INFORMATION IS TO BE BROUGHT TO THE ATTENTION OF THE ENGINEER PRIOR TO THE COMMENCEMENT OF THE WORKS ON SITE.
4. THE MAIN CONTRACTOR SHALL BE RESPONSIBLE FOR THE SETTING OUT AND ACCURACY OF ALL DIMENSIONS.
5. THE CONTRACTOR IS TO ENSURE THE STABILITY AND STRUCTURAL INTEGRITY OF THE EXISTING PROPERTY AT ALL TIMES DURING WORKS AND IS TO BE RESPONSIBLE FOR ALL PROPPING AND SHORING AS REQUIRED.
6. MAIN CONTRACTOR TO PROVIDE AND FIX SUITABLE BRACING AND PROPPING FOR ALL ELEMENTS IN THE TEMPORARY CONDITION DURING CONSTRUCTION STAGE, SUCH AS TO ENSURE STRUCTURE STABILITY AT ALL TIMES.
7. IT IS THE CONTRACTORS SOLE RESPONSIBILITY FOR ASCERTAINING SAFE DISPOSAL OF ANY OFF-SITE EXCAVATED SPOIL. NO CLAIM RESULTING FROM ABNORMAL TIP REQUIREMENTS WILL BE ENTERTAINED.

Rev.	Date	Description	By
P02	21.11.2025	RESERVED MATTERS SUBMISSION	TA
P01	17.11.2025	PRELIMINARY ISSUES FOR COMMENT	TA

ARCH ASSOCIATES
01489 890004
admin@archassociates.co.uk
www.archassociates.co.uk

Client
EASTLEIGH BOROUGH COUNCIL

Architect
BOYLE & SUMMERS

Project title
ONE HORTON HEATH, UPPER ACRE, EASTLEIGH.

Drawing title
DRAINAGE DETAILS, SHEET 2.

Scale	Paper size	Date	Drawn by	Checked by	Status
AS SHOWN	A1	OCT 2025	TA	CH	

Name

Project code	Originator	Functional breakdown	Spatial breakdown	Form	Discipline	Number	Revision
AAL390	AAL	ED	XX	DD	C	5552	P02

Scale 1:1
0mm 50 100

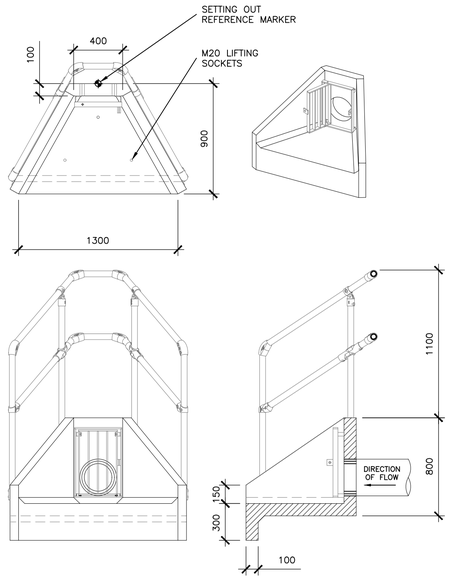

H3C HEADWALL AND HINGED CLOSE COUPLED GRATING AND 3 SIDED KEE KLAMP

[OUTLET FOR PIPES UP TO 300mm DIA.]

(SCALE 1:25@A1)

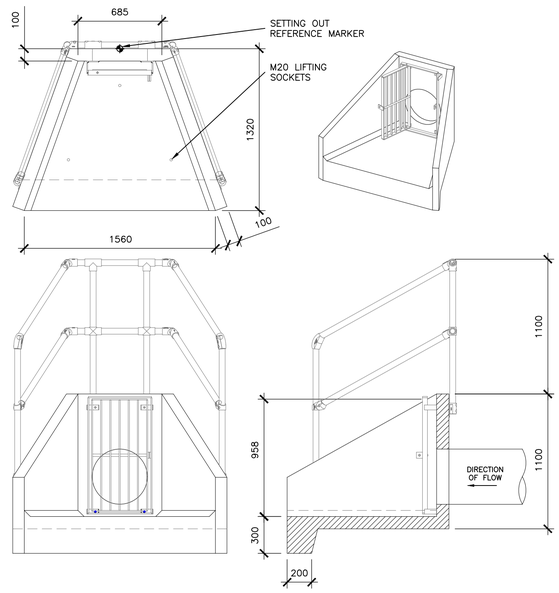

H6CA HEADWALL AND HINGED CLOSE COUPLED GRATING AND 3 SIDED KEE KLAMP

[OUTLET FOR PIPES UP TO 600mm DIA.]

(SCALE 1:25@A1)

NOTES

© This drawing is the copyright of ARCH Associates Limited. It may not be copied, altered or reproduced without their written authority. This drawing must not be scaled. IF IN DOUBT ASK.

GENERAL NOTES

1. THIS DRAWING IS TO BE READ IN CONJUNCTION WITH ALL RELEVANT ARCHITECTS, ENGINEERS AND SPECIALISTS DRAWINGS AND DETAILS.
2. ALL FIGURED DIMENSIONS TO BE TAKEN IN PREFERENCE TO SCALED DIMENSIONS.
3. ANY DISCREPANCIES BETWEEN THIS DRAWING AND OTHER INFORMATION IS TO BE BROUGHT TO THE ATTENTION OF THE ENGINEER PRIOR TO THE COMMENCEMENT OF THE WORKS ON SITE.
4. THE MAIN CONTRACTOR SHALL BE RESPONSIBLE FOR THE SETTING OUT AND ACCURACY OF ALL DIMENSIONS.
5. THE CONTRACTOR IS TO ENSURE THE STABILITY AND STRUCTURAL INTEGRITY OF THE EXISTING PROPERTY AT ALL TIMES DURING WORKS AND IS TO BE RESPONSIBLE FOR ALL PROPPING AND SHORING AS REQUIRED.
6. MAIN CONTRACTOR TO PROVIDE AND FIX SUITABLE BRACING AND PROPPING FOR ALL ELEMENTS IN THE TEMPORARY CONDITION DURING CONSTRUCTION STAGE, SUCH AS TO ENSURE STRUCTURE STABILITY AT ALL TIMES.
7. IT IS THE CONTRACTORS SOLE RESPONSIBILITY FOR ASCERTAINING SAFE DISPOSAL OF ANY OFF–SITE EXCAVATED SPOIL. NO CLAIM RESULTING FROM ABNORMAL TIP REQUIREMENTS WILL BE ENTERTAINED.

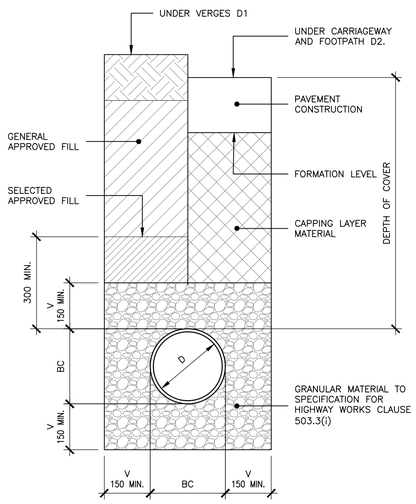

IN UNIFORM SOILS
V = 1/6 BC (150mm MIN., UNDER BARREL AND COLLAR)
IN MIXED SOILS CONTAINING IRREGULAR HARD SPOTS
V = 1/4 BC (200mm. MIN)
DESIGN D1 (UNDER VERGES – >900 COVER)
DESIGN D2 (UNDER CARRIAGEWAYS – >1200 COVER)

BEDDING DETAIL – CLASS 'S'

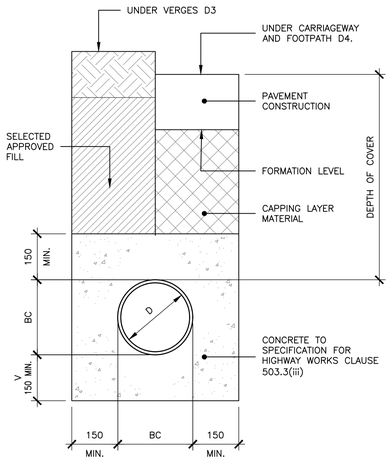

V = 1/4 D (150mm MIN., UNDER BARREL AND COLLAR)
DESIGN D3 (UNDER VERGES – <900 COVER)
DESIGN D4 (UNDER CARRIAGEWAYS – <1200 COVER)

BEDDING DETAIL – CLASS 'Z'

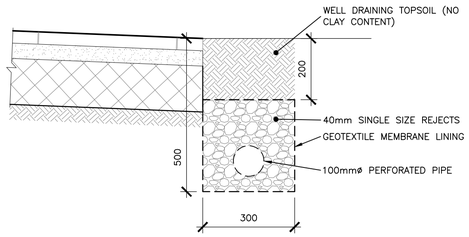

LAND DRAIN DETAIL

(1:10)

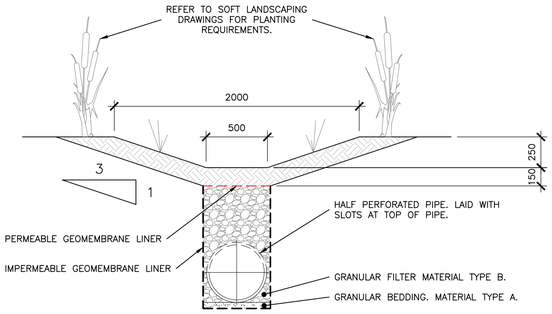

CONEYANCE SWALE DETAIL

(SCALE 1:25@A1)

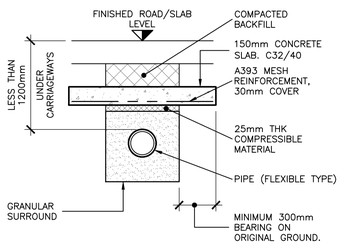

ALTERNATIVE PROTECTION OF A SHALLOW PIPELINE USING A SLAB

UNDER VERGES LESS THAN 900 COVER
UNDER CARRIAGEWAYS LESS THAN 1200 COVER

(SCALE 1:25@A1)

NOTES
1. ALL DIMENSIONS IN MILLIMETRES
2. ALL DETAILS IN ACCORDANCE WITH SECTIONS 5.57 – 5.61
3. UNTRAPPED GULLY CHAMBER MAY BE EMPLOYED IN CONNECTED TO SURFACE WATER ONLY

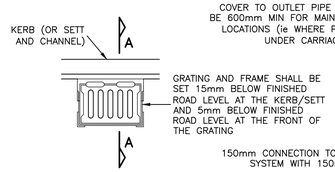

PLAN

NOTE:
DUE TO RESTRICTIVE SITE LEVELS, THE COURSES OF BRICKWORK MAY NEED TO BE OMITTED AND THE GULLEY BEDDED IMMEDIATELY ON CONCRETE SURROUND

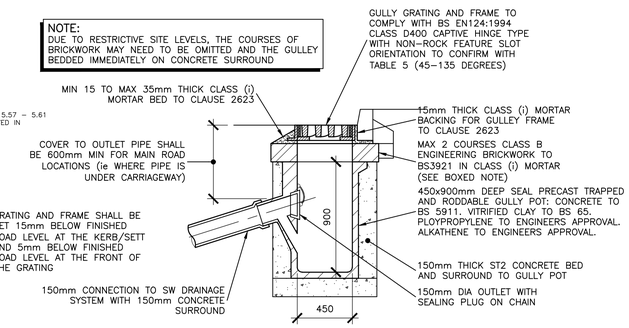

SECTION A–A

TYPICAL ROAD GULLY DETAIL

(1:25)

Rev.	Date	Description	By
P02	21.11.2025	RESERVED MATTERS SUBMISSION	TA
P01	17.11.2025	PRELIMINARY ISSUES FOR COMMENT	TA

ARCH ASSOCIATES
01489 890004
admin@archassociates.co.uk
www.archassociates.co.uk

Client
EASTLEIGH BOROUGH COUNCIL

Architect
BOYLE & SUMMERS

Project title
ONE HORTON HEATH,
UPPER ACRE,
EASTLEIGH.

Drawing title
DRAINAGE DETAILS,
SHEET 3.

Scale	Paper size	Date	Drawn by	Checked by	Status
AS SHOWN	A1	OCT 2025	TA	CH	

Name

Project code	Originator	Functional breakdown	Spatial breakdown	Form	Discipline	Number	Revision
AAL390	AAL	ED	XX	DR	C	5553	P02

Scale 1:1
0mm 50 100

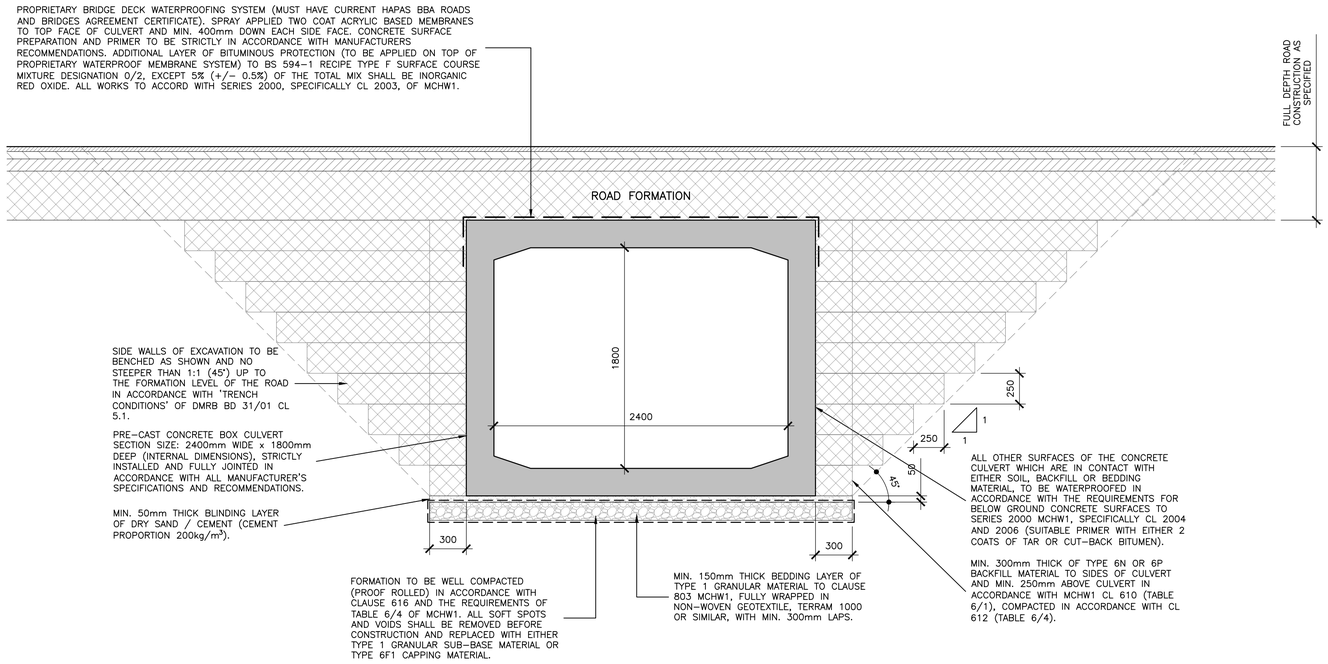

TYPICAL SECTION THROUGH ROAD CULVERT WATERCOURSE CROSSING

(SCALE 1:25@A1)

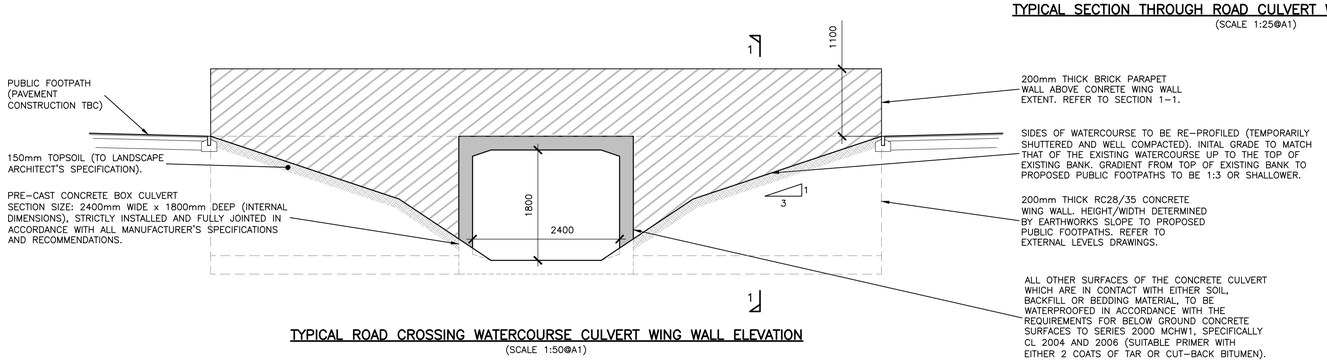

TYPICAL ROAD CROSSING WATERCOURSE CULVERT WING WALL ELEVATION

(SCALE 1:50@A1)

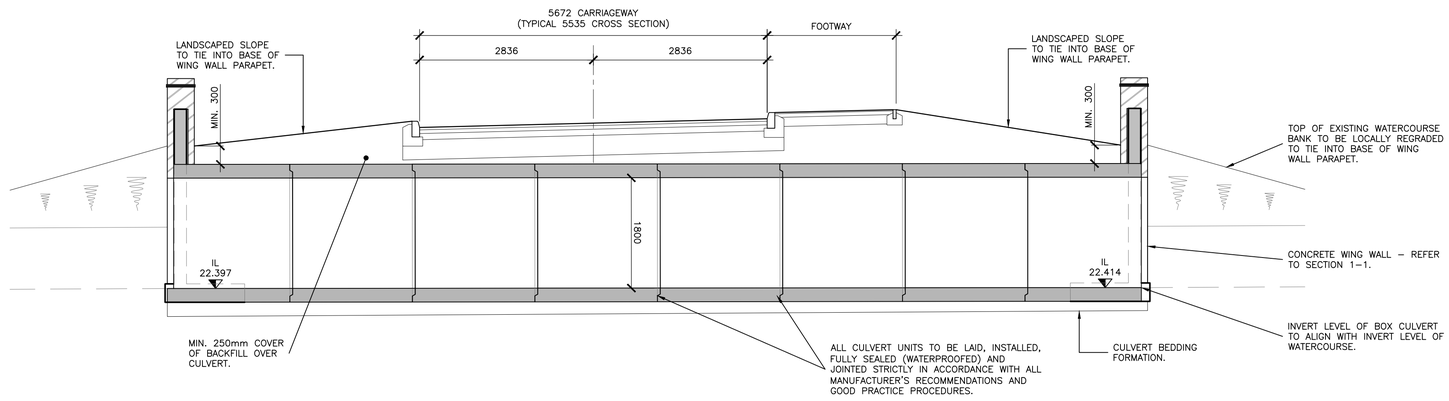

LONGITUDINAL SECTION THROUGH WATERCOURSE CROSSING CULVERT

(SCALE 1:50@A1)

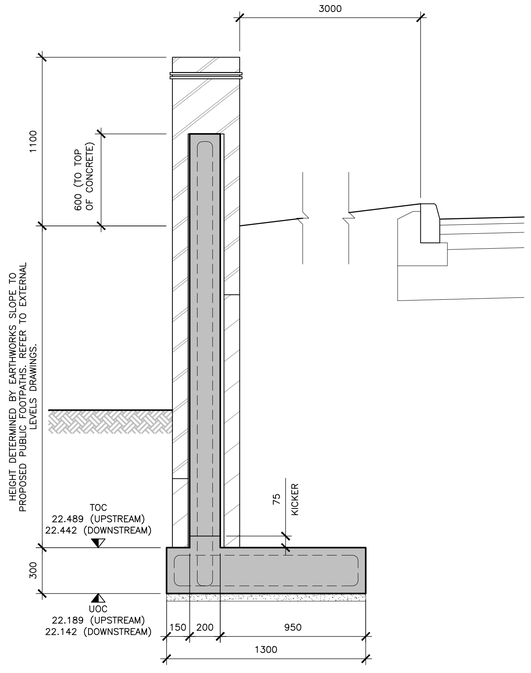

SECTION 1-1

(SCALE 1:20@A1)

Scale 1:1
0mm 50 100

NOTES

© This drawing is the copyright of ARCH Associates Limited. It may not be copied, altered or reproduced without their written authority. This drawing must not be scaled. IF IN DOUBT ASK.

GENERAL NOTES

1. THIS DRAWING IS TO BE READ IN CONJUNCTION WITH ALL RELEVANT ARCHITECTS, ENGINEERS AND SPECIALISTS DRAWINGS AND DETAILS.
2. ALL FIGURED DIMENSIONS TO BE TAKEN IN PREFERENCE TO SCALED DIMENSIONS.
3. ANY DISCREPANCIES BETWEEN THIS DRAWING AND OTHER INFORMATION IS TO BE BROUGHT TO THE ATTENTION OF THE ENGINEER PRIOR TO THE COMMENCEMENT OF THE WORKS ON SITE.
4. THE MAIN CONTRACTOR SHALL BE RESPONSIBLE FOR THE SETTING OUT AND ACCURACY OF ALL DIMENSIONS.
5. THE CONTRACTOR IS TO ENSURE THE STABILITY AND STRUCTURAL INTEGRITY OF THE EXISTING PROPERTY AT ALL TIMES DURING WORKS AND IS TO BE RESPONSIBLE FOR ALL PROPPING AND SHORING AS REQUIRED.
6. MAIN CONTRACTOR TO PROVIDE AND FIX SUITABLE BRACING AND PROPPING FOR ALL ELEMENTS IN THE TEMPORARY CONDITION DURING CONSTRUCTION STAGE, SUCH AS TO ENSURE STRUCTURE STABILITY AT ALL TIMES.
7. IT IS THE CONTRACTORS SOLE RESPONSIBILITY FOR ASCERTAINING SAFE DISPOSAL OF ANY OFF-SITE EXCAVATED SPOIL. NO CLAIM RESULTING FROM ABNORMAL TIP REQUIREMENTS WILL BE ENTERTAINED.

Rev.	Date	Description	By
P02	21.11.2025	RESERVED MATTERS SUBMISSION	TA
P01	20.11.2025	PRELIMINARY ISSUES FOR COMMENT	TA

ARCH ASSOCIATES
01489 890004
admin@archassociates.co.uk
www.archassociates.co.uk

Client
EASTLEIGH BOROUGH COUNCIL

Architect
BOYLE & SUMMERS

Project title
ONE HORTON HEATH, UPPER ACRE, EASTLEIGH.

Drawing title
DRAINAGE DETAILS, SHEET 4.

Scale	Paper size	Date	Drawn by	Checked by	Status
AS SHOWN	A1	NOV 2025	TA	CH	

Name

Project code	Originator	Functional breakdown / Spatial breakdown	Form	Discipline	Number	Revision
AAL390	AAL	ED	XX	DD	C	5554	P02